Ex-Or

by Honeywell

MLS Digital Detector
MLS2000DF for DSI ballasts
MLS2000DALIF for DALI ballasts

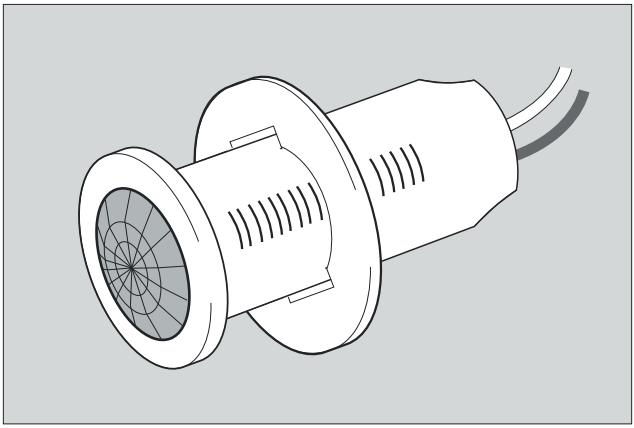

Installation and Commissioning Instructions

Note: QuickSet Pro required for commissioning
HC5A available for user override

MLS Digital Detector: MLS2000DF for DSI ballasts / MLS2000DALIF for DALI ballasts

Only suitably qualified personnel should install this equipment.

MLS Digital Detectors are the high-performance, communicating presence detectors at the heart of the advanced MLS Digital lighting management system. These detectors are equipped with a regulating photocell to work with digital DSI/DALI ballasts.

Fixing

These detectors are suitable for flush-mounting in a suspended ceiling tile, maximum 54mm thickness with a minimum clearance of 125mm between the front surface of the tile and the hard ceiling behind and should be mounted in the centre of the area being monitored. Cut a 50mm diameter (64mm if using an FR64 flush ring or PB64 plasterboard fixing kit) circular hole in the tile, feed the flying leads and detector through the hole and secure in position with the locking ring. Twist the locking ring to release the detector if necessary.

Note: Do not position within 25cm of a luminaire.

Connection

The detectors are supplied with two flying leads. The 5-core mains lead should be taken into the nearest luminaire, from where it will pick up its 230V supply. This lead also contains connections for the polarity-free digital output (for connection to the control input on the ballast) and the OneSwitch dimming input. The OneSwitch dimming input is sheathed for applications which do not require this connection. This wire should be terminated safely if not being used - do not connect to Neutral or Earth. Please see below for OneSwitch details.

The second lead contains connections for the MLS bus. The bus enables the MLS Detector to communicate with the rest of the MLS devices in the system.

Each luminaire to be controlled must contain a digital regulating type ballast with the appropriate DSI or DALI input. Ballast types must not be mixed. Connect all ballasts in the control group (maximum nine) in parallel and also to the polarity-free digital output of the MLS Detector.

Each luminaire is controlled completely by its digital input and therefore would normally have a permanent power supply. Turning the power off to some lights within a control circuit will not affect the operation of those that remain powered-up.

The MLS Bus must be connected to the MLS bus wiring network. An MLS Bus Power Supply is required for each network of up to 200 MLS Detectors. Please refer to Bus Power Supply instructions prior to commencement of any bus wiring.

It is imperative that the MLS bus is wired with the correct type of cable; normally it should be 1.5mm^2 unscreened twisted pair. Please read Application Note AN4001 for more details. **Do not connect mains to the MLS bus.**

'OneSwitch' Dimming

OneSwitch dimming affords local control to the end-user whereby a simple, momentary, push-to-make wallswitch can be used to raise or lower the lighting level or to toggle the output ON/OFF. A short press of the switch (less than 1 second) will toggle the output status while a longer press will raise or lower the output. Each time the switch is pressed, the direction of dimming reverses. If the switch has not been pressed for 5 seconds, the direction will be up (brighter) - unless the output is already above 90% in which case the direction is down. If the switch is held continuously, and the output reaches maximum, the light output will remain at this level until the switch is released - a latching switch may be connected in parallel allowing the occupancy detection to be overridden on (Note: If the initial direction was down, when the output reaches minimum it will ramp back up automatically).

Setting the Regulating Photocell

This product is intended for use with high frequency regulating ballasts with digital control inputs. An infrared programming tool QuickSet Pro is required for programming the regulating light level set point. The setting is preserved in the event of a power failure and can be re-programmed any number of times.

Using the QuickSet Pro, enter the Utilities menu then choose LightSpot/MLS/LCM and select 'Set Light Level'. Use the 'up' and 'down' buttons to manually adjust the light output from the luminaire(s) and when at the required level press and hold 'OK' to store. The luminaire(s) will blink to acknowledge a successful store operation.

Commissioning

Detectors are supplied factory pre-set which ensures the lighting will switch on automatically as soon as power is applied. Final commissioning of the detectors, including assigning to zones, requires the use of the QuickSet Pro Programmer. Please read carefully the progammer's operating instructions prior to performing a programming operation.

Commissioning Detectors Using the QuickSet Pro

It is important that the Programmer be held perpendicular and at a distance of between 0.5m and 2m from the detector.

1. Switch on by pressing any button (and unlock with top left rectangular button).
2. Point programmer at the detector and press the DOWNLOAD button. The programmer will confirm the product's identity and call up the correct menu of parameters and their current settings.
3. Use a combination of UP, DOWN, FORWARD and BACK buttons to navigate the parameter menu, selecting options for each shown.
4. When options for all parameters have been selected, point the programmer at the detector and press the UPLOAD button. The luminaire(s) will switch off briefly during the programming process and the programmer shows DATA OK to confirm operation.
5. After a short period of inactivity (default 5 minutes), the programmer hibernates retaining the most recent settings.

Parameter	Options	Pre-Set	Notes
Power Up	On / Off	On	Sets the luminaire state at power up irrespective of occupancy. Useful in reducing start-up load following power cut. Power-up off - responds to occupancy after 30 seconds.
Response	Auto, Manual/Bus, Manual only	Auto	If set to Auto, the presence detector switches the luminaire on and off automatically. If set to Manual Only, it can only be turned on by using OneSwitch or the hand-held controller. If set to Manual/Bus, an MLS Bus turn-on command for a Zone to which th
Off Delay	1 min - 96 hrs, 10-sec (walk-test), Disabled	20 mins	The time for which the luminaire will stay on following the last detected movement. Also 10-second setting for walk-testing.
On Sensitivity	0-100	100	Sensitivity to movement when area is occupied. 100 = max
Bus Connect	Yes / No	Yes	Do/Do not Signal/Receive on MLS Bus.
1st - 4th Zone	Address 1-100; -- (no zone); Common 1-3	No Zone	Individual Zones influencing and being influenced by this detector.
Corridor 1 & 2	0-100; -- (no zone); Building	No Zone	Zone ranges influencing and being influenced by this detector.
Global 1 & 2 Rx	Yes / No	No	Respond to selective load shedding.
Manual Input	Shared / Local	Local	Do/Do not signal OneSwitch commands across the MLS Bus.
Start Lamps	Max / Min	Max	Sets the level at which the lamps strike when turning on.
Entry Scene	1-6	Scene 1	Sets which scene is recalled when unoccupied area is entered.
Bright Out	Yes / No	No	If set to yes, movement fails to refresh the off delay if ambient light level exceeds 125% of set level and the luminaire will switch off when the off delay has elapsed. NB: Dimming must be set to 100%.
Dimming	Reg 50%-Reg100%	100%	Can be set to operate between 50% and 100% ballast output from max down to a bottom-end limit when working on photocell control.
Lamp Max	10%-100%	100%	Can be set to limit the absolute maximum output of the ballast in all operating modes.
Fade to Off	Yes / No	No	When no presence is detected, and after the off delay period, the lamps can fade out instead of switching off (approx 80 seconds to fade from 100% to 0%).
When Vacant	Off / Min / Reg <25% / Scene 6	Off	Options for a vacant area after it has timed out. Luminaires can turn off, remain at minimum output, or regulate with a 25% output limit, until the next period of occupancy. If programmed to remain at minimum, to regulate below 25% or go to scene 6, the
Set-point Low	0-1023	1023	Aiming point as photocell adjusts ballast output.
Set-point High	0-1023	1023	Level above which photocell switches its output off (only if Bright Out = Yes).

Additional feature accessible under Utilities on QuickSet Pro:

100 Hour Burn-In	Burn-in 100 hrs / Cancel / Resume	0 hr	See Application Note: AN4028

Electrical Connections

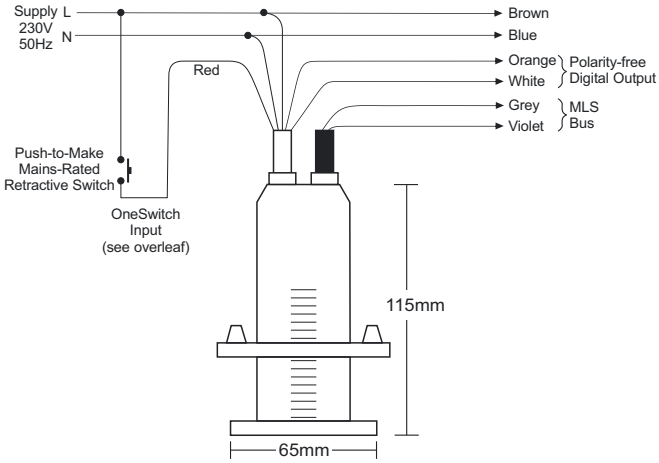

Technical Data

MLS CABLE: 1.5mm^2 unscreened twisted-pair : see Application Note AN4001
RECOMMENDED MAXIMUM MOUNTING HEIGHT: 3.0m
RANGE: Cone-shaped detection pattern, diameter (at floor level) = 2.4 x mounting height

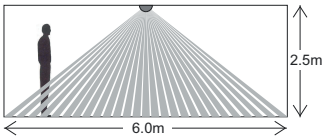

OPERATING VOLTAGE: 230V 50Hz (UK & Europe)
PRODUCT RATING & RECOMMENDED CIRCUIT PROTECTION: 10 Amps
CAPACITY: 9 ballasts
OUTPUT: 2-wire digital polarity free-max extended cable length: 12m
PHOTOCELL: Regulating
OFF DELAY: Adjustable via Programmer - factory pre-set to 20 minutes
DEPTH REQUIRED BEHIND CEILING: 125mm
WEIGHT: 370g incl. 3m cable at 100g/m
COLOUR: White
MATERIAL: Flame retardant PC/ABS
IP RATING: 4X
OPERATING TEMPERATURE: 0°C to 40°C

Important Additional Notes

1. A means for disconnection must be incorporated in the fixed wiring in accordance with the current wiring regulations.
2. Although nominally 12V, the dimming output is not SELV and therefore should be treated with the same respect as mains with regard to wiring practice. The 0V line of the dimming output is almost at Neutral potential.
3. The dimming control output should be connected only to the control input of the ballasts - never to other detectors.
4. This equipment should be used to control only those ballasts powered from the same phase as the detector.
5. Due to the fact that the photocell is on the ceiling looking down, it is not possible for measurements made with a lux meter on the working plane to remain constant when daylight illuminates the ceiling and the working plane to a differing extent. Therefore, products of this type should be regarded as capable of maintaining an APPROXIMATE light level only.

Honeywell Ex-Or
St. Mark's Court, North Street, Horsham,
West Sussex, RH12 1BW UK
Tel: + 44 (0)1942 719229
Email: technicalsales.ex-or@honeywell.com
www.ex-or.com