MS Series

Description

Model MS-2, MS-2H

The MS-2 manual fire alarm stations are dual action devices. These stations require that the outer door be lifted to expose the actuation door which is then pulled forward to operate the alarm toggle switch. The actuation door is now locked in the readily observable “alarm” position.

To reset the station, a key (common to Gamewell-FCI control panels) must be inserted and turned ¼ turn clockwise, opening the station. Closing the station resets the switch automatically

An optional breakglass rod is available for positive indication of station operation.

Model MS-2L (Institutional)

Operation of the Model MS-2L institutional station requires that a special key be used to release the actuation door before it can be operated.

Model MS-2-D (Multiple Contact)

The MS-2-D features a DPST switch for multiple signaling via wire lead connections.

Model MS-6 (Single Action)

The MS-6 station is a single action device, requiring only the pulling of the action door to release the compressed button switch. It is available either with terminals (MS-6T) or wire leads (MS-6).

The station resets in the same manner as the MS-2. The reset key is common to FCI control panels.

Specifications

Material (MS-2, MS-6)	Extruded 6063/T5 aluminum
Doors (MS-2, MS-6)	Clear anodize
Switch Type	
MS-2	Enclosed toggle
MS-6	Enclosed push button
Contact Material	Silver plated bronze or copper
Contact Ratings	
MS-2	6 amp. max. @ 30 VDC (resistive)
MS-6	0.5 amp. max. @ 30 VDC (resistive)
Dimensions (overall)	
MS-2, MS-6	5” H x 3.4” W x 2.8” D (12.7 cm x 8.64 cm x 7.11 cm)

Non-Coded, Manual
Fire Alarm Stations

Figure 1 MS-2

Figure 2 MS-2H

Figure 3 MS-6

Features

- Single and Dual Action Versions
- Tumbler Lock for Test and Reset Keyed Alike with FCI Control Panels
- Rugged Metal Construction
- Positive Indication of Operation over 180° Viewing Angle
- Surface or Semi-flush Mounting
- Shock and Vibration Resistant
- Institutional Version (MS-2L)
- Optional “FIRE SUPPRESSION SYSTEM RELEASE” Markings (MS-2H)
- Optional DPST Switch (MS-2-D)

SIGNALING
LISTED
S2465

FM
APPROVED
OJ3A9.AY/12880 (MS-2)
AD4A7.AY (MS-6, MS-6T)

MEA
Approved
960-81-SA (MS-2) 7150-1703:0100
103-93-E (MS-6)

GAMEWELL-FCI
12 Clintonville Road, Northford, CT 06472-1610 USA • Tel: (203) 484-7161 • Fax: (203) 484-7118
Specifications are for information only, are not intended for installation purposes, and are subject to change without notice. No responsibility is assumed by Gamewell-FCI for their use.
©2013 by Honeywell International Inc. All rights reserved.

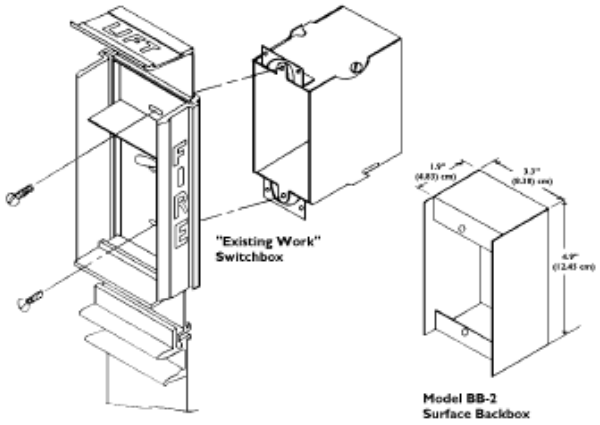

Figure 4 MS Series Installation

Ordering Information

Part Number	Description
1100-0615	MS-2, Dual Action fire alarm station
1100-0634	MS-2H Dual Action station with “FIRE SUPPRESSION SYSTEM RELEASE” markings
1100-0621	MS-2L, Institutional fire alarm station
1100-0617	MS-2-D, Dual action station with DPST switch
1100-0632	MS-6, Single action station, wire leads
1100-0633	MS-6T, Single action station, terminals
2520-0023	BB-2, Surface backbox for MS-2, MS-6 stations
1120-0206	Package of two replacement breakglass rods for MS-2 station