Farenhyt

Adds notification circuits to the SLC loop

SD500-ANM

Addressable Notification Module

The SD500-ANM gives you the flexibility to add notification circuits wherever you need them. The SD500-ANM is a supervised addressable notification device that provides you with additional notification circuits on the control panel SLC loop. Up to 127 SD500-ANM modules per loop can be used. The SD500-ANM provides a reverse polarity Class A or Class B notification appliance circuit, with supervised aux power input. Each SD500-ANM is provided power from a separate power supply and is controlled by the main panel. Power can be provided near the signaling appliance to reduce the wire gauge requirements. Power can also come from a main power supply and be controlled separately by the individual notification modules. The SD500-ANM can produce all 16 of the notification patterns available on the fire alarm control panel.

MEA

429-92-E, Vol. 9

APPROVED

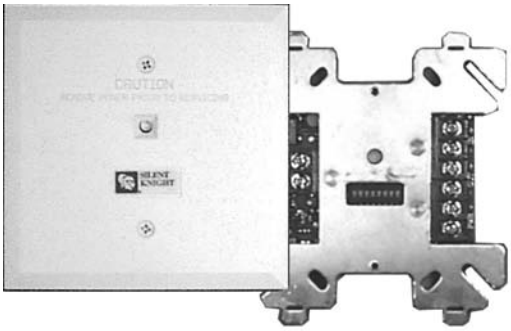

Features

- Class A (Style Z) or Class B (Style Y) Notification Circuit.
- Flexible programming—choose the cadence pattern (twelve standard & four user-defined).
- Polling LED visible through cover plate.
- UL listed, complies with NFPA 72.
- CFSM approved.
- MEA approved.
- Adds up to 127 independent output circuits on each SLC loop.
- Supervised auxiliary power input.
- Completely supervised.

Specifications

Operating Voltage:	24 VDC
SLC Current:	.55 mA
Aux. Power Current:	
Alarm:	56 mA
Standby:	6 mA
Notification Appliance Current:	2 Amp max.
Operating Temperature:	32ºF to 120ºF (0ºC to 49ºC)
Mounting:	4-square

Compatible Control Panels

IFP-1000

IFP-100

SILENT KNIGHT by Honeywell

7550 Meridian Circle
Maple Grove, MN 55369-4927
1-800-328-0103
763-493-6455 (in Minnesota)
Fax: 763-493-6475
http://www.farenhyt.com

P/N 350221 Rev B, 10/04

Copyright © 2004 Silent Knight

Dimensions

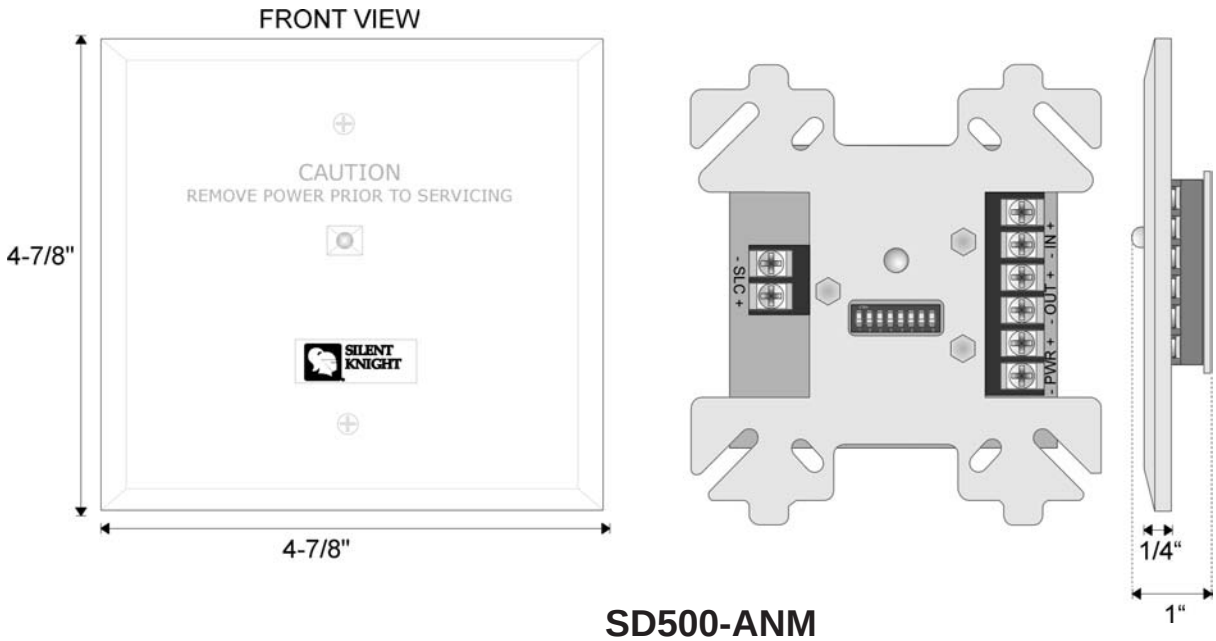

SD500-ANM

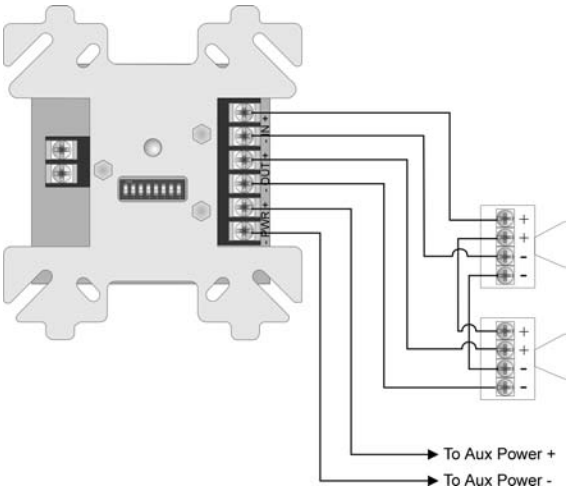

Class A Wiring

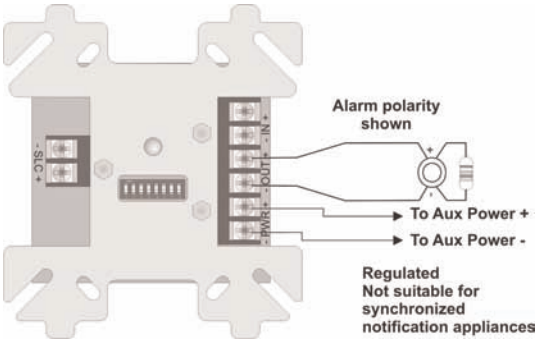

Class B Wiring

SILENT KNIGHT
by Honeywell

7550 Meridian Circle, Maple Grove, MN 55369-4927
1-800-446-6444 or in Minnesota 763-493-6435
FAX: 763-493-6475
World Wide Web: http://www.farenhyt.com

Made in the U.S.A.