60 SERIES
HC60WFCR1-V

12MP AI IR Fisheye Camera

5 YEAR WARRANTY

ONVIF® | SGTM

The new Honeywell 60 Series 12MP AI fisheye cameras offer exceptional 360° video clarity in a single camera with 12 dewarping views to minimize blind spots for effective wide area surveillance. Delivering exceptional performance in both variable and low-light scenarios, these cameras also feature advanced video/ object analytics and meet the latest enhanced FIPS 140-3 standard, making them suitable for larger enterprise applications demanding strict compliance.

ENHANCED DETECTION AND IMAGING

- Upgraded WDR (up to 140 dB) to significantly reduce image glare
- Increased IR distance (up to 30 m (98 ft))
- The Sony STARVIS 2 IMX676 (1/1.6" Progressive CMOS) image sensor offers sharper images with advanced HDR for smoother video in variable lighting
- Improved shutter speed (1/20000 ~ 1/5) allows faster capture of moving subjects, reducing motion blur and producing sharper images
- Enhanced 3D noise reduction eliminates visual noise resulting in crisper details for identifying objects or people in video footage
- Smart IR Technology automatically adjusts to changing light conditions and object distances for better capture of details even in dimly lit or nighttime scenes

INTELLIGENT SURVEILLANCE

- Probabilistic AI video object analytics quickly detects suspicious activities and identifies attributes such as vehicles and humans
- Visible bounding boxes with MAXPRO integration
- Supported in the Milestone plugin intelligent search

INCREASED OPERATIONAL EFFICIENCY

- System security enhancements with Secure Boot and latest FIPS 140-3 chipset provide secure data integrity and privacy
- Upgraded local storage (up to 1 TB) or 4X the amount of previous models significantly boosts camera data management and retention capacity
- ONVIF Profile M allows analytics metadata and events to be securely and seamlessly integrated within video surveillance systems for better operational decision making
- Remote configuration can be performed from web client or NVR

RUGGED, FLEXIBLE, COMPLIANT

- Built for challenging environments (IP66, IP67, NEMA 4X, TS-2, IK10)
- Flexible wall or ceiling mount options
- NDAA and NIS2 compliant

POTENTIAL APPLICATIONS:

- Retail (Big Box Stores)
- Large Office Buildings (Lobbies, Open Workspaces, Large Conference Rooms)
- Manufacturing / Warehouses / Loading Docks
- Hospitals / Healthcare (Waiting Rooms, Hallways, Nursing Stations)
- Schools / Universities (Cafeterias, Libraries, Hallways)
- Transportation Hubs (Airports, Train Stations, Bus Terminals)
- Parking Lots, Garages, Access Gates
- Public Spaces (Gaming/Casinos, Event Venues, Parks, Plazas)
- Government/Military Installations

Honeywell

60 SERIES 12MP AI IR FISHEYE CAMERA

OPERATIONAL

RAM	2 x 16 Gigabits
Flash	4 Gigabits
Video Standard	NTSC / PAL
Scanning System	Progressive
Image Sensor	Sony STARVIS 2 IMX676, 1/1.6" CMOS
Sensor Size (H x V)	7.104 mm x 7.104 mm
Number Of Pixels (H × V)	12 MP (3552 x 3552)
Minimum Illumination (Color/BW)	Color: 0.01 Lux@30IRE F2.0, B/W: 0Lux @F2.0(IR on)
S/N Ratio	55 dB
Electronic Shutter Speed	1/5 to 1/20,000 s
IR Distance	Up to 30 m (98 ft)
IR Light Control	Smart IR (Auto / Manual) / OFF
IR Light Number	5
Day/Night	Auto / Day Mode / Night Mode / Timing
Backlight Compensation	WDR, BLC, HLC
White Balance	Auto / Tungsten / Fluorescent / Daylight / Shadow / Manual
Gain Control	0 ~ 100 %
Wide Dynamic Range	Up to 140 dB
Noise Reduction	2D / 3D DNR
Lens	1.7 mm, fixed focal, fixed-iris, F2.0
Angle Of View (H x V x D)	Up to 185°
Privacy Masking	Off / On (4 Areas)
Defog	Supported
Encryption Chipset	Built-In FIPS 140-3 Encryption Chipset
Local Storage	Micro SD / SDHC / SDXC card slot (up to 1TB)
Alarm Inputs / Outputs	2ch Input, 2ch Output
Dewarping Modes	Double Panorama(1:1), Double Panorama(4:3), Double Panorama(16:9), Single Panorama(4:3), Single Panorama(16:9), Single Panorama(4:1), Single Panorama(16:3), 4PTZ(1:1), 4PTZ(4:3), 4PTZ(16:9), Fisheye + 3PTZ, Fisheye + 6PTZ

VIDEO

Video Compression	H.265/H.264/MJPEG, Smart Codec		
Resolution	**One-Channel**	**PAL**	**NTSC**
	Fisheye View	**Stream 1** 3552 x 3552, 2560 x 2560, 1520 x 1520, 1280 x 1280 @25fps, 1280 x 1280(MJPEG)@12fps **Stream 2** 640x640, 480x480 @25fps, 480x480(M-JPEG@12fps **Stream 3** 640x640, 480x480@25fps, 480x480(MJPEG)@12fps	**Stream 1** 3552 x 3552, 2560 x 2560, 1520 x 1520, 1280 x 1280 @30fps, 1280 x 1280(MJPEG)@12fps **Stream 2** 640x640, 480x480 @30fps, 480x480(MJPEG@12fps **Stream 3** 640x640, 480x480@30fps, 480x480(MJPEG)@12fps

VIDEO

Resolution	**One-Channel**	**PAL**	**NTSC**
	Single Panorama View	**Stream 1** 4096 x 1024, 2560 x 640, 1920 x 480, 4096 x 768, 2560 x 480, 1920 x 360, 4000 x 3000, 3552 x 2664, 2592 x 1944, 1280 x 960, 3840 x 2160, 2880 x 1620, 2560 x 1440, 1280 x 720 @25fps, 1920 x 480, 1920 x 360(MJPEG)@12fps **Stream 2** 1920x480, 960x240, 1920x360, 1280x240, 640x480, 320x240, 640x360@25fps, 1920x480, 1920x360 (MJPEG)@12fps **Stream 3** 1920x480, 960x240, 1920x360, 1280x240, 640x480, 320x240, 640x360@25fps, 1920x480, 1920x360(M-JPEG)@12fps	**Stream 1** 4096 x 1024, 2560 x 640, 1920 x 480, 4096 x 768, 2560 x 480, 1920 x 360, 4000 x 3000, 3552 x 2664, 2592 x 1944, 1280 x 960, 3840 x 2160, 2880 x 1620, 2560 x 1440, 1280 x 720 @30fps, 1920 x 480, 1920 x 360(MJPEG)@12fps **Stream 2** 1920x480, 960x240, 1920x360, 1280x240, 640x480, 320x240, 640x360@30fps, 1920x480, 1920x360 (MJPEG)@12fps **Stream 3** 1920x480, 960x240, 1920x360, 1280x240, 640x480, 320x240, 640x360@30fps, 1920x480, 1920x360(M-JPEG)@12fps
	Double Panorama View	**Stream 1** 3552 x 3552, 2560 x 2560, 1520 x 1520, 1280 x 1280, 4000 x 3000, 3552 x 2664,2592 x 1944, 1280 x 960, 3840 x 2160, 2880 x 1620, 2560 x 1440, 1280 x 720 @25fps, 1280 x 1280, 1280 x 960, 1280 x 720(MJPEG)@12fps **Stream 2** 640x640, 480x480, 640x480, 320x240, 640x360 @25fps, 480x480, 320x240, 640x360 (MJPEG)@12fps **Stream 3** 640x640, 480x480, 640x480, 320x240, 640x360@25fps, 480x480, 320x240, 640x360(MJPEG)@12fps	**Stream 1** 3552 x 3552, 2560 x 2560, 1520 x 1520, 1280 x 1280, 4000 x 3000, 3552 x 2664,2592 x 1944, 1280 x 960, 3840 x 2160, 2880 x 1620, 2560 x 1440, 1280 x 720 @30fps, 1280 x 1280, 1280 x 960, 1280 x 720(MJPEG)@12fps **Stream 2** 640x640, 480x480, 640x480, 320x240, 640x360 @30fps, 480x480, 320x240, 640x360 (MJPEG)@12fps **Stream 3** 640x640, 480x480, 640x480, 320x240, 640x360@30fps, 480x480, 320x240, 640x360(M-JPEG)@12fps
	4PTZ View	**Stream 1** 3552 x 3552, 2560 x 2560, 1520 x 1520, 1280 x 1280, 4000 x 3000, 3552 x 2664, 2592 x 1944, 1280 x 960, 3840 x 2160, 2880 x 1620, 2560 x 1440, 1280 x 720@25fps, 1280 x 1280, 1280 x 960, 1280 x 720(MJPEG)@12fps **Stream 2** 640x640, 480x480, 640x480, 320x240, 640x360 @25fps, 480x480, 320x240, 640x360(MJPEG)@12fps **Stream 3** 640x640, 480x480, 640x480, 320x240, 640x360 @25fps, 480x480, 320x240, 640x360(MJPEG)@12fps	**Stream 1** 3552 x 3552, 2560 x 2560, 1520 x 1520, 1280 x 1280, 4000 x 3000, 3552 x 2664, 2592 x 1944, 1280 x 960, 3840 x 2160, 2880 x 1620, 2560 x 1440, 1280 x 720@30fps, 1280 x 1280, 1280 x 960, 1280 x 720(MJPEG)@12fps **Stream 2** 640x640, 480x480, 640x480, 320x240, 640x360 @30fps, 480x480, 320x240, 640x360(M-JPEG)@12fps **Stream 3** 640x640, 480x480, 640x480, 320x240, 640x360 @30fps, 480x480, 320x240, 640x360(M-JPEG)@12fps
	Fisheye + 3PTZ View	**Stream 1** 3552 x 3552, 2560 x 2560, 1520 x 1520, 1280 x 1280 @25fps, 1280 x 1280(MJPEG)@12fps **Stream 2** 640x640, 480x480 @25fps, 480x480(M-JPEG)@12fps **Stream 3** 640x640, 480x480@25fps, 480x480(MJPEG)@12fps	**Stream 1** 3552 x 3552, 2560 x 2560, 1520 x 1520, 1280 x 1280 @30fps, 1280 x 1280(MJPEG)@12fps **Stream 2** 640x640, 480x480 @30fps, 480x480(MJPEG)@12fps **Stream 3** 640x640, 480x480@30fps, 480x480(MJPEG)@12fps

Honeywell

60 SERIES 12MP AI IR FISHEYE CAMERA

VIDEO

	Multi-Channel	PAL	NTSC
Resolution	4PTZ View	**Stream 1** 1776 x 1776, 1520 x 1520, 1280 x 1280, 1280 x 960, 720 x 720, 2048 x 1536, 2304 x 1296, 1280 x 720 @25fps, 1776 x 1776, 1520 x 1520, 1280 x 1280, 1280 x 960, 1280 x 720, 720 x 720(MJPEG)@12fps **Stream 2** 640×640, 704x576, 352x288, 320x240, 640x480, 640x360@25fps, 640×640, 640x360, 704x576, 352x288, 320x240(MJPEG)@12fps **Stream 3** **1520x1520, 1280x1280, 640x640, 704x576, 352x288, 640x480, 320x240, 640x360 @25fps, 1520x1520, 1280x1280, 640x640, 640x360, 704x576, 320x240 (MJPEG)@12fps**	**Stream 1** 1776 x 1776, 1520 x 1520, 1280 x 1280, 1280 x 960, 720 x 720, 2048 x 1536, 2304 x 1296, 1280 x 720 @30fps, 1776 x 1776, 1520 x 1520, 1280 x 1280, 1280 x 960, 1280 x 720, 720 x 720(MJPEG)@12fps **Stream 2** 640×640, 704x480, 352x240, 320x240, 640x480, 640x360@30fps, 640×640, 640x360, 704x480, 352x240, 320x240(MJPEG)@12fps **Stream 3** 1520x1520, 1280x1280, 640x640, 704x480, 352x240, 640x480, 320x240, 640x360 @30fps, 1520x1520, 1280x1280, 640x640, 640x360, 704x480, 320x240 (MJPEG)@12fps
	Fisheye+ 3PTZ/6PTZ	**Stream 1** 3552 x 3552(ch1), 1776 x 1776, 1520 x 1520, 1280 x 1280, 1280 x 960, 720 x 720 @25fps, 3552 x 3552(ch1), 1776 x 1776, 1520 x 1520, 1280 x 1280, 1280 x 960, 720 x 720 (MJPEG)@12fps **Stream 2** 640×640, 704x576, 352x288, 320x240@25fps 640×640, 704x576, 352x288, 320x240(M-JPEG@12fps) **Stream 3** Fisheye+3PTZ 1520x1520, 1280x1280, 640x640, 704x576, 352x288 @25fps, 1520x1520, 1280x1280, 640x640, 704x576, 352x288 (MJPEG)@12fps	**Stream 1** 3552 x 3552(ch1), 1776 x 1776, 1520 x 1520, 1280 x 1280, 1280 x 960, 720 x 720 @30fps, 3552 x 3552(ch1), 1776 x 1776, 1520 x 1520, 1280 x 1280, 1280 x 960, 720 x 720 (MJPEG)@12fps **Stream 2** 640×640, 704x480, 352x240, 320x240@30fps 640×640, 704x480, 352x240, 320x240(M-JPEG@12fps) **Stream 3** Fisheye+3PTZ 1520x1520, 1280x1280, 640x640, 704x480, 352x240 @30fps 1520x1520, 1280x1280, 640x640, 704x480, 352x240(MJPEG@12fps)
Number Of Video Streams	3		
Frame Rate	**Main Stream:** MAX 25/30 fps (WDR on) MAX 20 fps (WDR on) **Second Stream:** MAX 25/30 fps (WDR on) MAX 20 fps (WDR on) **Third Stream:** MAX 25/30 fps (WDR on) MAX 20 fps (WDR on)		

VIDEO

Bit Rate	**Stream1:** 1-25fps/30fps (H.264/H.265) 3552x3552, 4000x3000, 3552x2664, 3840x2160 500kbps-16000kbps 4096x1024, 4096x768, 2592x1944, 2560x2560, 1520x1520, 2880x1620, 2560x640, 2560x1440, 2560x480, 1920x480, 1920x360, 2048x1536,2304x1296, 1776x1776, 1280x1280 500kbps-12000kbps 1280x960, 720x720, 1280x720 200kbps-8000kbps 12fps (MJPEG) 1776x1776, 1520x1520, 1280x1280, 1920x480, 1920x360 (MJPEG) 500kbps-12000kbps 720x720, 1280x960, 1280x720(MJPEG) 200kbps-8000kbps **Stream2:** 1-25fps/30fps (H.264/H.265) 1920x480, 1920x360, 1280x240 500kbps-12000kbps 640x640 200kbps-8000kbps 704x576(PAL)/704x480(NTSC), 480x480, 960x240, 640x320 100kbps-6000kbps 640x480 100kbps-3000kbps 352x288(PAL)/352x240(NTSC), 320x240, 640x360 100kbps-1500kbps 1-12fps (MJPEG) 1920x480, 1920x360 (MJPEG) 500kbps-12000kbps 640x640 (MJPEG) 200kbps-8000kbps 704x576(PAL)/704x480(NTSC) (MJPEG) 100kbps-6000kbps 480x480, 960x240, 640x320 (MJPEG) 100kbps-6000kbps 640x360 (MJPEG) 100kbps-3000kbps 352x288(PAL)/352x240(NTSC), 320x240 (MJPEG) 500kbps-1500kbps **Stream3**: 1-30fps (H.264/H.265) NTSC: 1920x480, 1520x1520, 1920x360, 1280x1280, 1280x240, 500kbps-12000kbps 640x640 200kbps-8000kbps 704x480, 480x480, 960x240 100kbps-6000kbps 640x480 100kbps-3000kbps 640x360, 352x240, 320x240 100kbps-1500kbps 1-25fps (H.264/H.265) PAL: 1920x480, 1520x1520, 1920x360, 1280x1280, 1280x240, 500kbps-12000kbps 640x640 200kbps-8000kbps 704x576, 480x480, 960x240 100kbps-6000kbps 640x480 100kbps-3000kbps 640x360, 352x288, 320x240 100kbps-1500kbps 1-12fps (MJPEG) NTSC: 1920x480, 1520x1520, 1920x360, 1280x1280 (MJPEG) 500kbps-12000kbps 640x640 (MJPEG) 200kbps-8000kbps 704x480 (MJPEG) 100kbps-6000kbps 480x480 100kbps-6000kbps 640x360 100kbps-3000kbps 352x288(PAL)/352x240(NTSC), 320x240 500kbps-1500kbps 1-12fps (MJPEG) PAL: 1920x480, 1520x1520, 1920x360, 1280x1280 (MJPEG) 500kbps-12000kbps 640x640 (MJPEG) 200kbps-8000kbps 704x576 (MJPEG) 100kbps-6000kbps 480x480 100kbps-6000kbps 640x360 100kbps-3000kbps 352x288(PAL)/352x240(NTSC), 320x240 500kbps-1500kbps

AUDIO

Audio Compression	G.711a / G.711u / G726
Audio Stream	2-Way, Full duplex
Audio Interface	1ch Input, 1ch Output, Built-in Mic

* Some development may be required in specific user cases to support some of these protocols in the field as they mature over time.

Honeywell

60 SERIES 12MP AI IR FISHEYE CAMERA

NETWORK	
Ethernet	10 Base-T / 100 Base-TX Ethernet (RJ-45)
Supported Web Browsers	Microsoft Edge, Chrome
Supported OS	Microsoft Windows 10, Windows 11
Protocols*	IPv4, IPv6, TCP / IP, HTTP, HTTPS, RTSP / RTP / RTCP, IGMP / Multicast, SMTP, DHCP, NTP, DNS, QoS, SNMP, 802.1X, UDP, ICMP, ARP, TLS, FTP/SFTP, DDNS
Interoperability	ONVIF Profile S, G, T, M
Maximum Users Access	10 Users
Security	User account and password protection, HTTPS, IP Filter, Digest authentication, TLS1.2&TLS1.3, Stream encryption, AES128 / 256, SSH / Telnet closed, PCI-DSS compliance, Built-In encryption chipset
Secure Boot	Supported
Languages Supported	Arabic, Czech, Dutch, English, French, German, Italian, Japanese, Korean, Polish, Portuguese (Brazil), Spanish, Turkish, Traditional Chinese

EVENTS/ANALYTICS	
Video Analytics	**Video analysis is supported under single channel fisheye mode only:** Motion Detection, Smart Motion, Scene Change, Intrusion, Multi-Loitering, People Counter, Face Detection, Line Crossing Detection, Unattended Object Detection, Missing Object Detection
Object Analytics	**Object Classes:** Humans, Vehicles
Event Type	Alarm Input, SD Card Alarm, Abnormal Sound Alarm, Illegal Access Alarm
Event Linkage	Event notification using digital output, FTP/SFTP, Email, Micro SD card recording and audio output
Region Of Interest	8

ELECTRICAL	
Power Supply	DC12V⎓2A; or PoE 50-57V⎓, 720 mA (IEEE 802.3at)
Power Consumption	Max 17 W

MECHANICAL	
Dimensions (Ø x H)	Ø 158.9 x 56 mm (6.26" x 2.21")
Package Dimensions (D x D x H)	200 x 200 x 105 mm (7.87" X 7.87" X 4.13")
Dome Diameter	Ø 47.8 mm (1.88")
Product Weight	0.71 kg (1.57 lb)
Package Weight	1.11 kg (2.45 lb)
Body Material	Metal and Plastic
Color	RAL 9003, Black

ENVIRONMENTAL	
Operating Temperature	Starting Temperature: -40°C ~ 60°C (-40°F ~ 140°F) Working Temperature: -40°C ~ 60°C (-40°F ~ 140°F) (65° for 4 hours when IR off) Maximum temperature according to NEMA TS2 (para 2.8-2.9): 74 °C (165 °F)
Relative Humidity	Less than 95%, non-condensing
Ingress Protection	IP66, IP67, NEMA 4X
Impact Resistance	IK10

REGULATORY	
Emissions	FCC PART 15, ICES, CE (EN 55032), Complies with UKCA and RCM
Immunity	CE(EN 50130-4, EN55035), Complies with UKCA and RCM
Safety	UL LISTED TO UL/CSA 62368-1, CE(EN 62368-1), Complies with UKCA and RCM
RoHS	CE(EN 63000),UAE(Cabinet Decree No.10 of 2017)
Country of Origin	Vietnam
Warranty	5 years

DORI (EN62676-4 STANDARD)	
Detect	32 m (104.99 ft)
Observe	12.8 m (41.99 ft)
Recognize	6.4 m (21 ft)
Identify	3.2 m (10.5 ft)

DIMENSIONS

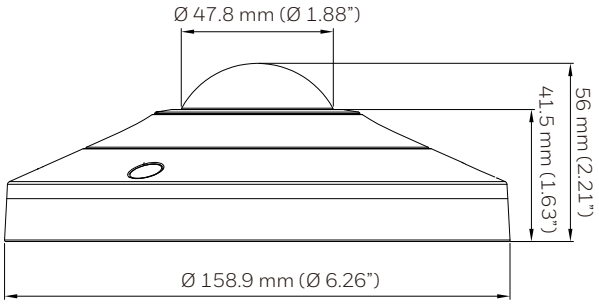

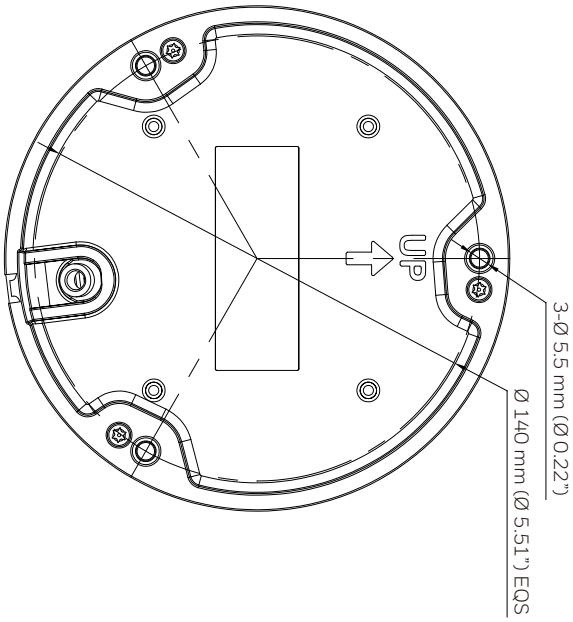

Honeywell

60 SERIES 12MP AI IR FISHEYE CAMERA

SYSTEM COMPATIBILITY & RECOMMENDED ACCESSORIES

SYSTEM COMPATIBILITY	
MAXPRO NVR	Supported with MAXPRO R795
ADPRO NVR iFT-E*	Up to 32 IP channels with up to 32 VA channels NVRs
ADPRO NVR iFT*	Up to 32 IP channels or 16 IP channels with up to 16 VA channels NVRs
ADPRO NVR eFT-S*	Up to 16 IP channels or 8 IP channels with up to 8 VA channels NVRs
Honeywell DVM*	Supported with Honeywell DVM R800
35 Series NVR	4/8/16/32/64-channel 35 series NVRs
Third Party Systems	Supported with Milestone 2025 R1

* Limited features are supported for compatibility. Please refer to the Integration Matrix for detailed information.

OPTIONAL MOUNTS AND ACCESSORIES**	
HA60JCBH2	60S dome junction box
HA35PLM01	35S pole mount bracket
HA35CNM01	35S corner mount bracket
HA60PMC4FI	60S outdoor dome fisheye cap 3/4NPT female
HA60PMC4FO	60S outdoor dome fisheye cap 1.5NPT male
HA35CLM01	35S ceiling mount base with adapter
HA35CLM02	35S ceiling mount pendent extension, 252 mm
HA60APR	60S outdoor dome adapter plate and rubber

** Mounting accessories, unless otherwise noted, are not included with camera and must be ordered separately. Please refer to the cross reference matrix or accessories datasheet for detailed information.
HA60JCBH2 - coming in 2026
HA60APR is included in camera package

ORDERING

PART NUMBER	DESCRIPTION
HC60WFCR1-V	60 Series 12 MP AI IR Fisheye Camera, WDR up to 140 dB, 1.7 mm, PoE, IP66/IP67/NEMA 4X/IK10

HEVCAdvance™

For more information
buildings.honeywell.com/security

Honeywell Commercial Security
715 Peachtree St. NE
Atlanta, GA 30308
1.800.323.4576
www.honeywell.com

ONVIF and the ONVIF logo are trademarks of ONVIF Inc.
HEVC Advance logo is a trademark of HEVC Advance.
Sony and Sony STARVIS are registered
trademarks of Sony Corporation.

Honeywell reserves the right, without notification, to
make changes in product design or specifications.

HBA-SEC-60S-HC60WFCR1-V-DS-US-EN-09-2025-V01-Y
© 2025 Honeywell International Inc.

Honeywell