50 SERIES
HC50W43R3

3MP IP Fixed Lens IR Rugged Dome Cameras

5 YEAR WARRANTY | ONVIF® | S G T M

OPERATIONAL	
Video Standard	NTSC/PAL
Scanning System	Progressive
Image Sensor	1/2.8" CMOS
Lens	2.8 mm, Fixed, F1.4
Number of Pixels (H x V)	3MP (2304 x 1296)
Minimum Illumination (Color/BW)	Color: 0.002 Lux @ F1.6 B/W: 0 Lux IR ON
S/N Ratio	55 dB
Electronic Shutter Speed	1/3 to 1/1,00,000s
IR Distance	40 Mtrs
IR Light Control	Smart IR (Auto/Manual)/OFF
Day/Night	Auto/Day/Night/Timing
Backlight Compensation	WDR, HLC, BLC
Wide Dynamic Range	130 dB
Noise Reduction	2D/3D DNR
Electronic Image Stabilization	Supported
G-Sensor	Supported
Privacy Masking	Off/On (5 Areas)
Defog	Supported
Local Storage	Micro SD/SDHC/SDXC card slot (2TB)
IR-Cut Filter	Supported
White Balance	Auto/Fixed Current/Manual
Gain Control	0 ~ 100%
Angle of View (H x V)	H:87.2° V:49.1°
Reset	Supported

VIDEO	
Video Compression	H.265 HEVC/H.264/MJPEG, Smart Codec
Number of Video Streams	4
Resolution*	Main Stream: 2304 x 1296/1920 x 1080/1280 x 720 704 x 576/640 x 480/352 x 288/320 x 240 Second Stream: 2304 x 1296/1920 x 1080/1280 x 720 704 x 576/640 x 480/352 x 288/320 x 240 Third Stream: 1920 x 1080/1280 x 720/704 x 576 640 x 480/352 x 288/320 x 240 Fourth Stream: 640 x 480/352 x 288/320 x 240
Frame Rate*	Main Stream: Max@50fps Second Stream: Max@50fps Third Stream: Max@50fps Fourth Stream: Max@50fps
Bit Rate	100K ~ 6 Mbps

NETWORK	
Ethernet	10 Base-T/100 Base-TX Ethernet (RJ-45)
Supported Web Browsers	Microsoft Edge, Chrome
Supported OS	Microsoft Windows 10, Windows 11
Protocols**	IPv4, IPv6, TCP/IP, HTTP, HTTPS, RTSP/RTP/RTCP, IGMP/Multicast, SMTP, SNMP, DHCP, NTP, DNS, DDNS, CoS, QoS, 802.1X, UPnP, mDNS(Bonjour), UDP, ICMP, ARP, TLS, SFTP
Interoperability	ONVIF Profi le S/G/T/M
Maximum Users Access	10 Users
Security	Firmware encrypted & Signed, SD card encryption, User account and password protection, HTTPS, IP Filter, Digest authentication, Device Certifi cate, TLS 1.2 & 1.3, Stream encryption, AES128/256, SSH/Telnet closed, PCIDSS compliance, Secure boot, Prevent brute-force attack, Audit User Access/System/Event log management
Languages Supported	English, French, German, Italian, Japanese, Portuguese, Spanish

EVENTS/ANALYTICS	
Video Analytics	Motion Detection, Scene Change, Tamper Detection, Smart Motion, Smart Intrusion, Smart Loitering, Smart Line Crossing Detection, Unattended Object Detection, Missing Object Detection, People Counter, Queuing, Crowd Gathering, Heat Map, Face Detection
Event Type	Analytics alarm, Disk alarm, Recording alarm, Tampering
Event Linkage	Email, SD card recording, SFTP recording, NAS recording
Region of Interest	6
Event Notification	HTTPS, HTTP, SMTP, ONVIF

ELECTRICAL	
Power Supply	DC12V, PoE (IEEE 802.3af)(Class 0)
Power Consumption (Max)	12.95W

MECHANICAL	
Dimensions	Ø140 × 113.5 mm (5.5" x 4.47")
Dome Diameter	Ø99.1 mm (3.90")
Product Weight	0.81 kg (1.79 lb)
Package Weight	1.06 kg (2.34 lb)
Body Material	Aluminium + Polycarbonate
Color	White (RAL9003)

DORI*** (EN62676-4 STANDARD)	
Detect	60.6 Mtrs
Observe	24 Mtrs
Recognize	12.1 Mtrs
Identify	6.1 Mtrs

*Refer to resolution-frame rate reference document for more details.

** Some development may be required in specific user cases to support some of these protocols in the field as they mature over time.

***The table is for reference only. The detection value is a theoretical value and may differ from the actual detection value. The distances within it are subject to actual conditions including atmospheric conditions, target size, the installation site and more.

Honeywell

50 SERIES 3MP DOME FIXED LENS IR RUGGED DOME CAMERAS

ENVIRONMENTAL	
Operating Temperature	-30°C ~ 60°C (-22°F ~ 140°F) (IR off)
Relative Humidity	Less than 95 %, Non-condensing
Ingress Protection	IP66, IP67
Impact Resistance	IK10
Reliability	IEC 60068-2-1, IEC 60068-2-2, IEC 60068-2-78, IEC 60068-2-11, IEC 60068-2-27, IEC 60068-2-64
Gore Vent	Supported

REGULATORY	
Emissions	FCC PART 15, CE (EN 55032), ICES-003
Immunity	CE (EN 55035)
Safety	UL listed to UL/CSA 62368-1, BIS IS 13252 (Part 1)/IEC 69050-1
Environment	RoHS, REACH, WEEE
Cyber Security	BIS ER, STQC
Country of Origin	India

DIMENSIONS

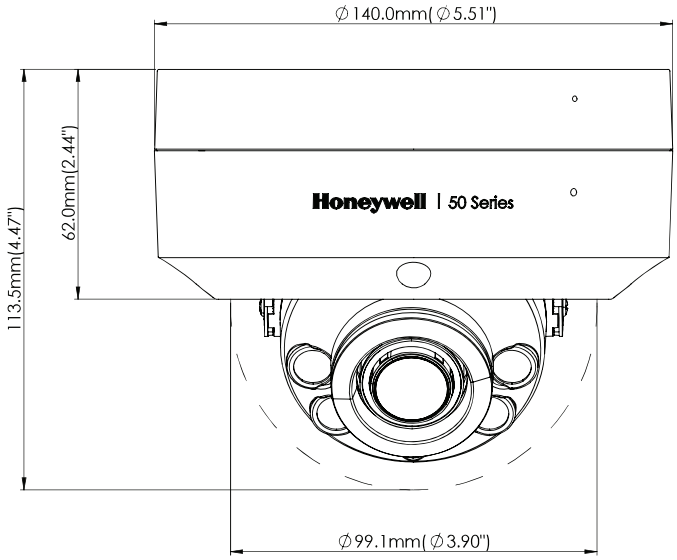

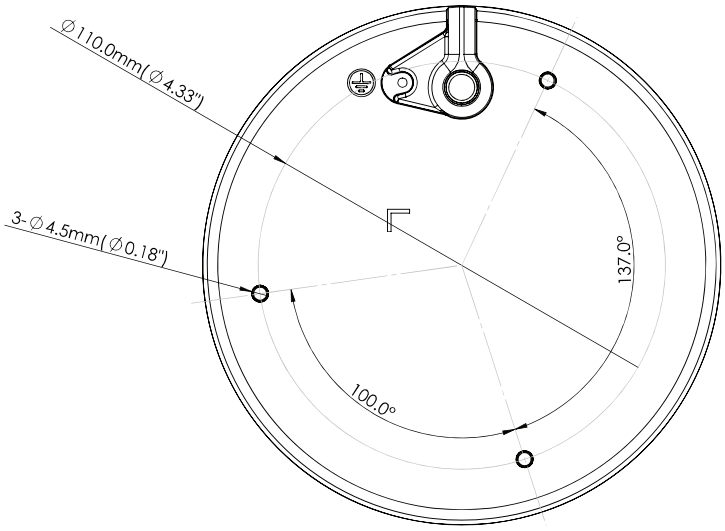

ORDERING

ORDERING	
HC50W43R3	3 MP Outdoor Dome Camera, WDR, 2.8 mm, PoE 802.3af, DC12V

HEVCAdvance™

For more information,

https://honeywellbuildings.in
Tel: +91 124 4975000
Email: BuildingAutomation.SecurityIndia@honeywell.com

Honeywell Building Automation

Unitech Trade Center, 5th Floor, Sector-43,
Block C, Sushant Lok Phase - I,
Gurgaon - 122 002, Haryana, India
https://www.honeywellbuildings.in/

ONVIF and the ONVIF logo are trademarks of ONVIF Inc.
Honeywell reserves the right, without notifi cation, to make changes in product design or specifi cations.

HSV-HC50W43R3-01-IN(0825)DS-Y

© 2025 Honeywell International Inc.

Honeywell