Honeywell

I/O Modules

EXPANSION MODULES AND WIRING ADAPTER

INSTALLATION INSTRUCTIONS

CONTENTS

General Safety Information 3
Regulation (EC) No 1907/2006 4
WEEE 4

Technical Specification 5
Electrical Data 5
Operating Environment 5
Standards 5

Interfaces 7
Service Button 10
Nomenclature 10
I/O Module Part Numbers 10
Compatibility 11
I/O Terminal Cover Labels 12
I/O Characteristics 14
Supported Sensors (Sensor Scaling in the I/O Module) 17
General Information on the RS485 Standard 19

Power Supply (External) 19
Transformers 19
Switch Mode Power Supply 20

I/O Module Power consumption 20
I/O Module Basic Power Consumption 21
Power Consumption of 1 (single) Channel 21
I/O Module Maximum Current Consumption (105 mm device) 22
I/O Module Maximum Current Consumption (70 mm device) 22

Wiring and Set-up 23
General Safety Considerations 23
Wiring Terminals 23
Connecting Power Supply 23
Earth Grounding 23
Cable Specifications 24
Dimensions - I/O Module with HOA (105 mm) 25
I/O Module without HOA (105 mm) 25
Dimensions - I/O Module with HOA (70 mm) 26
I/O Module without HOA (70 mm) 26

I/O Modules Mounting 27
Mounting Precautions 28
Mounting the I/O Module on a Wall/Panel using DIN Rail 28
Installing the Auxiliary Terminal Block (optional) 29
Mounting Wiring Adapter on the DIN Rail 29
Protective End Cover 31
Mounting Jumper Bars on the I/O Module (only for DO relay models) 32
Removing the I/O Module from the DIN Rail 33
Universal Input/Output (UIO Module) 37
Universal Input (UI Module) 38
Digital Input (DI Module) 39
Digital Relay Output 40
DIP Switches 41

HOA (Hand-Off-Auto) 42
Dial and Buttons Functions 43
Channel Icons Description 44
Setting up the Device 44
I/O Modules Offline Configuration 46
Safety Position Configuration 47
Floating Control Synchronization 47

Managing Firmware/Configuration of I/O Modules 47
For Niagara Advanced Controller 47
For CPO Advanced Controller 47
Rules for Configuration Update 47

LED and HOA Display Indications 48
Main LED (On Dial) 50
Service LED 50
RS485 LED 51
Channel LEDs 51

Appendix: Earth Grounding 53
I/O Module and SELV 53
I/O Module and EN60204-1 53
Functional EMC Grounding 53
Accessories Part Numbers 54

Technical Literature 56

GENERAL SAFETY INFORMATION

- When performing any work (installation, mounting, start-up), all manufacturer instructions and in particular these Installation Instructions are to be observed. Refer to the I/O modules Mounting instructions (31-00555).
- I/O module may be installed and mounted only by authorized and trained personnel.
- Rules regarding electrostatic discharge should be followed.
- If the I/O module is modified in any way, except by the manufacturer, all warranties concerning operation and safety are invalidated.
- Use only accessory equipment which comes from or has been approved by Honeywell.
- Make sure that the local standards and regulations are observed at all times. Examples of such regulations are VDE 0800 and VDE 0100 or EN 60204-1 for earth grounding.
- It is recommended that devices be kept at room temperature for at least 24 hours before applying power. This is to allow any condensation resulting from low shipping/storage temperatures to evaporate.
- The I/O module must be installed in a manner (e.g., in a lockable cabinet) ensuring that unauthorized persons have no access to the terminals.
- Investigated according to United States Standard UL-60730-1, UL-916, and UL60730-2-9.
- Investigated according to Canadian National Standard(s) C22.2, No. 205-M1983 (CNL-listed).
- Do not open the I/O module, as it contains no user-serviceable parts inside.
- CE declarations according to LVD Directive 2014/35/EU and EMC Directive 2014/30/EU.
- Product standards are EN 60730-1 and EN 60730-2-9 for indoor use only.
- Important: Changes or modifications to this unit not expressly approved by the party responsible for compliance could void the user's authority to operate the equipment.
- NOTE: This equipment has been tested and found to comply with the limits for a Class B digital device, pursuant to part 15 of the FCC Rules. These limits are designed to provide reasonable protection against harmful interference in a residential installation.
- This equipment generates, uses and can radiate radio frequency energy and, if not installed and used in accordance with the instructions, may cause harmful interference to radio communications. However, there is no guarantee that interference will not occur in a particular installation.
- If this equipment does cause harmful interference to radio or television reception, which can be determined by turning the equipment off and on, the user is encouraged to try to correct the interference by one or more of the following measures:
  - Reorient or relocate the receiving antenna.
  - Increase the separation between the equipment and receiver.
  - Connect the equipment into an outlet on a circuit different from that to which the receiver is connected.
  - Consult the dealer or an experienced radio/TV technician for help.
- This device complies with Part 15 of the FCC Rules. Operation is subject to the following two conditions: (1) this device may not cause harmful interference, and (2) this device must accept any interference received, including interference that may cause undesired operation.

Professional Installation

- This device must be professionally installed, this should be noted on grantee.
- This device requires a significant technology engineering expertise towards understanding of the tools and relevant technology, not readily available to average consumer. Only a person professionally trained in the technology is competent.
- This device is not directly marketed or sold to general public.

Safety Information as per EN60730-1

The I/O module is intended for residential, commercial, and light-industrial environments.

The I/O module is an independently mounted electronic control system with fixed wiring.

The I/O module is suitable for mounting in fuse boxes conforming with standard DIN43880 and DIN19, and having a slot height of max. 1.77" (45 mm).

It is suitable for panel rail mounting on 1.37" (35 mm) standard panel rail (both horizontal and vertical rail mounting possible).

The I/O module is used for the purpose of building HVAC control and is suitable for use only in non-safety controls for installation on or in appliances.

Table 1. Safety Information as per EN60730-1

Electric Shock Protection	SELV
Pollution Degree	Pollution Degree 2, suitable for use in industrial environments.
Installation	Safety class: Evaluated in final product
Overvoltage Category	Category II: for mains-powered (relay) controls Category I: for 24 V powered controls
Rated Impulse Voltage	330 VAC for Category I (SELV) 2500 VAC for Relay output (DO)
Automatic Action	Type 1.B (micro-disconnection for relay)
Software Class	Class A
Enclosure	According to final product evaluation, meet requirements of IP20

Table 1. Safety Information as per EN60730-1

Ball-pressure Test Temperature	>167 °F (75 °C) for all housing and plastic parts > 257 °F (125 °C) in the case of devices applied with voltage-carrying parts, connectors, and terminals.
Electromagnetic Interference	Tested at 230 VAC, with the modules in normal condition.
System Transformer	Europe: safety isolating transformers according to IEC61558-2-6 U.S.A. and Canada: NEC Class-2 transformers
Purpose of Control	Operating

WEEE

WEEE Directive 2012/19/EC Waste Electrical and Electronic Equipment Directive

- At the end of the product life, dispose of the packaging and product in an appropriate recycling center.
- Do not dispose of the device with the usual domestic refuse.
- Do not burn the device.

Regulation (EC) No 1907/2006

According to Article 33 of REACH Regulation, be informed that this product may contain components with lead (CAS: 7439-92-1) content above the threshold level of 0.1 % by weight.

TECHNICAL SPECIFICATION

Electrical Data

Table 2. Electrical Data

Operating Voltage (AC)	19 to 29 VAC (50/60 Hz)
Operating Voltage (DC)	19 to 29 VDC
Overvoltage Protection	Protected against overvoltage of max. 29 VAC or 40 VDC. Terminals protected against short-circuiting.

NOTE: For the power consumption detail, refer to the “I/O Module Maximum Current Consumption (105 mm device)” section on page 22 and “I/O Module Maximum Current Consumption (70 mm device)” section on page 22.

Operating Environment

Table 3. Operating Environment

Ambient Operating Temperature	-40 to 150 °F (-40 to 65.5 °C) for non-HOA models, Wiring Adapter, and Auxiliary terminal block. -4 to 150 °F (-20 to 65.5 °C) for HOA models.
Ambient Operating Humidity	5 to 95 % relative humidity (non-condensing)
Shipping and Storage Temperature	-40 to 158 °F (-40 to 70 °C) for I/O modules, Wiring Adapter, and Auxiliary terminal block.
Vibration Under Operation	0.024” double amplitude (2 to 30 Hz), 0.6 g (30 to 300 Hz)
Dust, Vibration	According to EN60730-1
RFI, EMI	Commercial, light, industrial, residential environments
Elevation	Up to 13123 ft (4000 meters) from sea level.
MTBF (Mean Time Between Failure)	11.5 years

Standards

Table 4. Standards

Protection Class	According to final product evaluation, meet requirements of IP20
Emission & Electrical Compliance	• CE — EMC - EN61326-1:201X Immunity: Table 2 - For equipment intended use in industrial location Emission: Class B — EMC- Immunity and Emission EN60730-1 — EMC- EN55032 Class B — EMC- Emission EN61000-6-3 — EMC- Immunity EN61000-6-2 • Safety - EN61010-1:201X; EN60730-1; • America — UL - UL916, UL60730-1, UL60730-2-9 — Emission - FCC Part 15B-Class B

Table 4. Standards

Certification	• IEC68 • EN 60730-1 • EN 60730-2-9 • FCC Part 15, Subpart B • CAN ICES-3 (B)/NMB-3(B) • EN 61326-1 • EN 61010-1 • RoHS II: 2011/65/EU • REACH 1907/2006 • EN ISO 16484-2:2004, section 5.4.3 • UL 916 • CSA C22.2 No. 205 • UL 60730-1 • CAN/CSA E60730-1 • UL 60730-2-9 • CAN/CSA-E60730-2-9:18 • CAN/CSA-E60730-1:02
System Transformer	The system transformer(s) must be safety isolating transformers according to IEC 61558-2-6. In the U.S.A. and Canada, NEC Class 2 transformers must be used.
Mounting compliances	DIN43880 and DIN19

INTERFACES

8 Digital Outputs

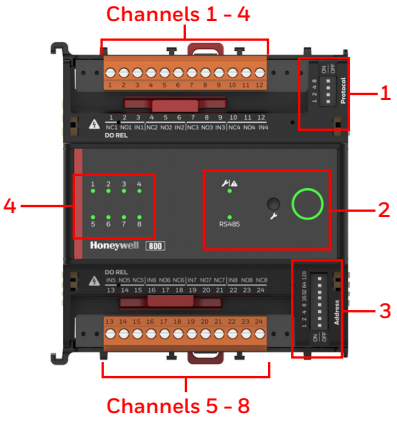

8 Digital Outputs with HOA

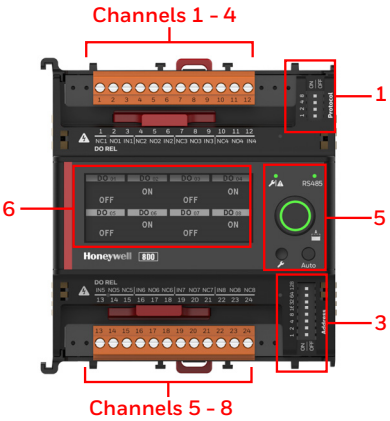

16 Digital Inputs

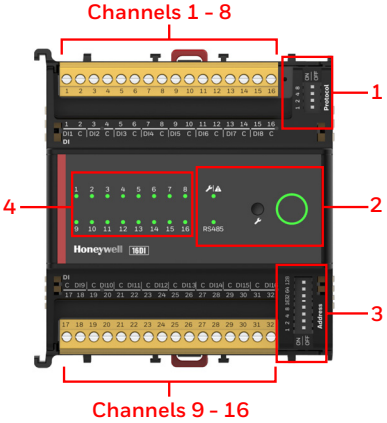

16 Universal Inputs

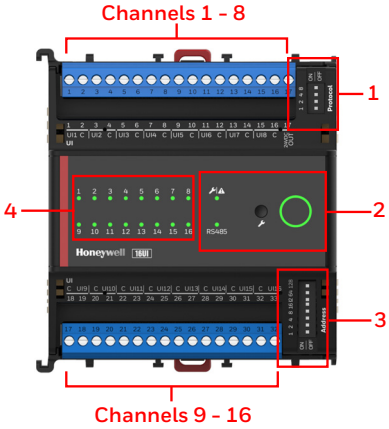

16 Universal I/O

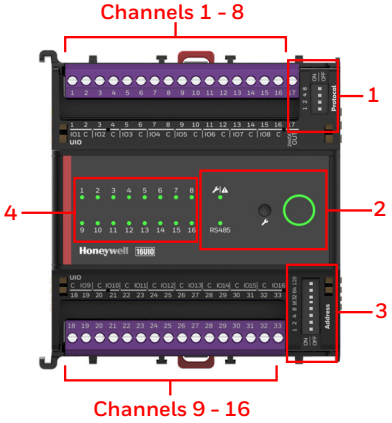

16 Universal I/O with HOA

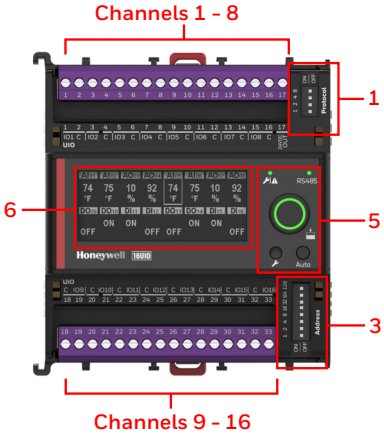

8 UIO

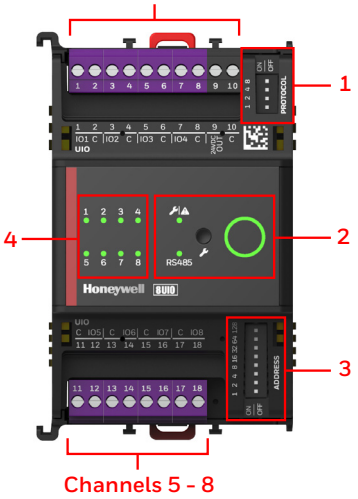

8 UIO - HOA

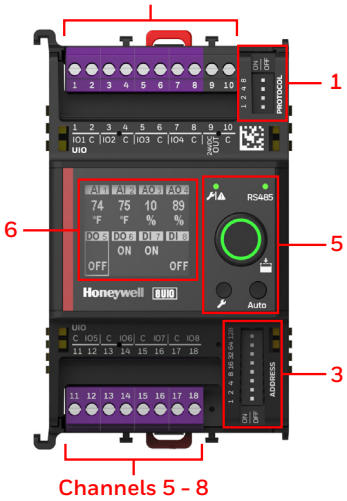

8 AO

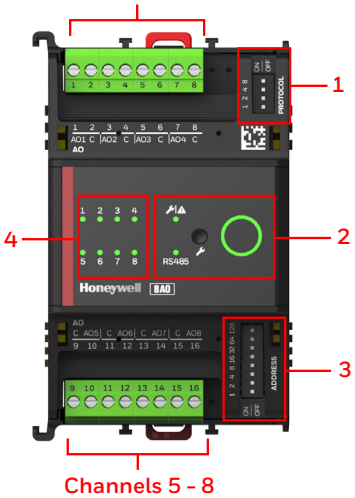

8 AO - HOA

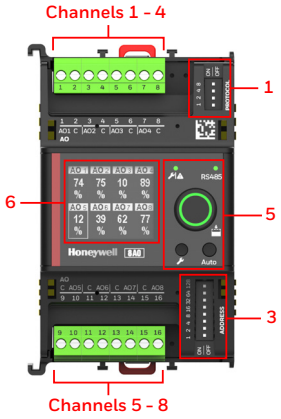

4 UIO

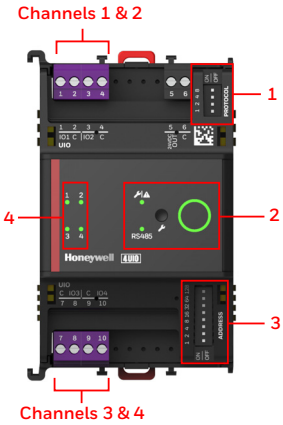

4 UIO - HOA

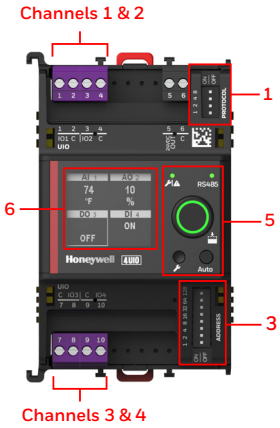

8 DI

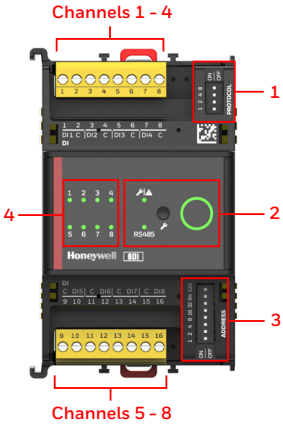

4 DOR

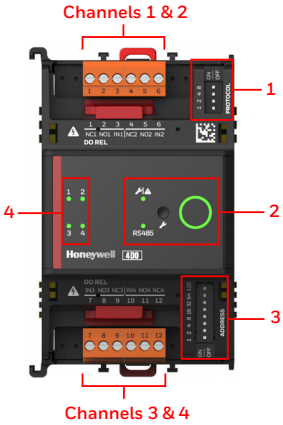

4 DOR - HOA

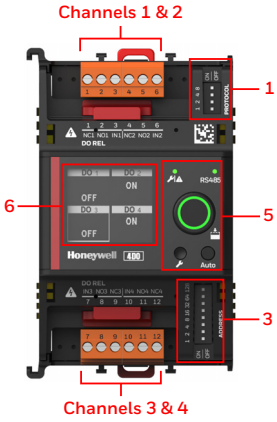

4 DORE

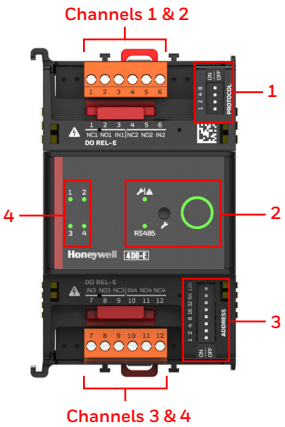

4 DORE - HOA

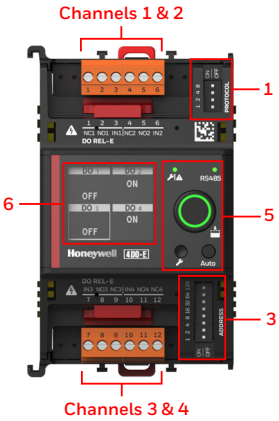

I/O Modules Touch Flakes

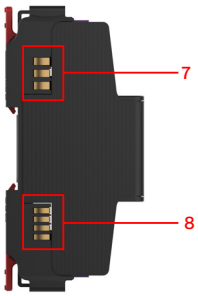

Wiring Adapter Terminals

Wiring Adapter Touch Flakes

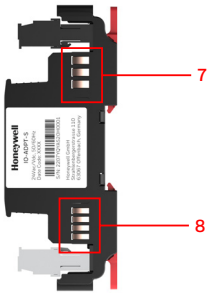

Table 5. I/O Module and Wiring Adapter Terminals

Type	Legend	Signal	Description
Protocol	1		Protocol DIP Switch (4-bit)
LED/Button	2	Service LED	Service status of the I/O module.
		RS485 LED	Transmit and receive indication for RS485 communication.
		Ring LED	Indicates the operational status of the I/O module.
		Service button	Reset the device to factory default.
Address	3		Address DIP switch (8-bit)
LED	4	LED	Transmit and receive signal of Input/Output (Off, Green, Yellow, and Red)
LED/Button	5	Service LED	Service status of the I/O module.
		RS485 LED	Transmit and receive indication for RS485 communication.
		Ring LED	Indicates the operational status of the I/O module.
		Auto button	Auto button returns the selected channel to the Auto mode.
		Rotary dial	Rotate to the desired channel; then press to select the channel. Rotate to manually override the channel; press to exit to the main screen. DO channels can be set to ON or OFF. AO channels can be set between 0 to 100 %.
		Service button	Reset the device to factory default.
Hand-Off-Auto	6	Backlit Display	Displays the status of each channel, the type of point (AO, DO, AI, DI) and an indication if the channel is manually overridden (hand icon) with reverse background.
Adapter / I/O Module (Touch flakes - Power Terminals) NOTE: Touch flake connections extend power to the I/O modules	7	24V~	Power supply (24 VAC/VDC)
		24V0	Power supply common
		FGND	Connect to earth ground in the field
Adapter / I/O Module (Touch flakes - Comm Terminals)	8	T1L(+)	Pass through connection to T1L I/O modules (future).
		T1L(-)	
		RS485(+)	Touch flake connections extend RS485 communications from the Advanced Controller to the I/O modules.
		RS485(-)	
Wiring Adapter Power Supply Terminals	9	⏚	Connect to earth ground in the field
		V0	Power supply common
		≂	Power supply (24 VAC/VDC)

Table 5. I/O Module and Wiring Adapter Terminals (Continued)

Type	Legend	Signal	Description
Wiring Adapter RS485 Port Terminals	10	COM	COM contact
		RS485(-)	(-) for RS485 port
		RS485(+)	(+) for RS485 port

Service Button

The I/O module has a physical service button to reset the device to factory default.

In most cases, a factory reset can be achieved while keeping power on to the I/O module. This is the recommended method as it is easier to perform the reset.

In some side cases (i.e. - application locked up), the only way that a device will reset is if power is interrupted to the I/O module first. If the I/O module did not reset with the recommended method, only then try resetting using the alternative method.

With Power On (Recommended method): Press and hold the service button for 10-15 seconds until the service LED blinks Green, then release the button and short press the service button within 5 seconds to confirm the reset to factory default.

With Power Off (Alternative method): Press and hold the service button, continue to press and hold the service button while turning power on to the I/O module. Continue holding the service button for 10-15 seconds until the service LED blinks Green, then release the button and short press the service button within 5 seconds to confirm the reset to factory default.

The reset performs the following operations:

- Resets the local I/O configuration
- Keeps the current firmware version
- Erases historical data

Nomenclature

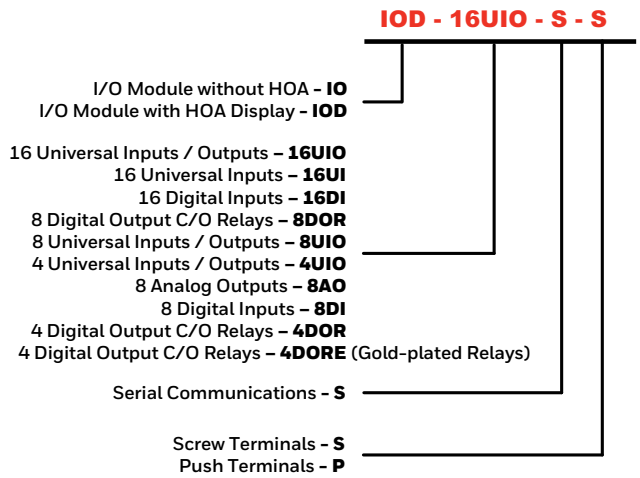

NOTE: I/O Modules factory supplied with push terminals are not available in America.

I/O Module Part Numbers

Table 6. I/O Module Part Numbers

Part Number	I/O	HOA Display	Serial Comms	Terminal Types	C/O Relays	Dimension
IO-16UIO-S-S	16 UIO	No	Yes	Screw	No	105 mm (4.13")
IOD-16UIO-S-S	16 UIO	Yes	Yes	Screw	No	105 mm (4.13")
IO-16UI-S-S	16 UI	No	Yes	Screw	No	105 mm (4.13")
IO-16DI-S-S	16 DI	No	Yes	Screw	No	105 mm (4.13")
IO-8DOR-S-S	8 DO	No	Yes	Screw	Yes	105 mm (4.13")
IOD-8DOR-S-S	8 DO	Yes	Yes	Screw	Yes	105 mm (4.13")
IO-8UIO-S-S*	8 UIO	No	Yes	Screw	No	70 mm (2.76")
IOD-8UIO-S-S*	8 UIO	Yes	Yes	Screw	No	70 mm (2.76")
IO-8AO-S-S*	8 AO	No	Yes	Screw	No	70 mm (2.76")
IOD-8AO-S-S*	8 AO	Yes	Yes	Screw	No	70 mm (2.76")
IO-4UIO-S-S*	4 UIO	No	Yes	Screw	No	70 mm (2.76")

Table 6. I/O Module Part Numbers (Continued)

Part Number	I/O	HOA Display	Serial Comms	Terminal Types	C/O Relays	Dimension
IOD-4UIO-S-S*	4 UIO	Yes	Yes	Screw	No	70 mm (2.76")
IO-8DI-S-S*	8 DI	No	Yes	Screw	No	70 mm (2.76")
IO-4DOR-S-S*	4 DO	No	Yes	Screw	Yes	70 mm (2.76")
IOD-4DOR-S-S*	4 DO	Yes	Yes	Screw	Yes	70 mm (2.76")
IO-4DORE-S-S*	4 DO	No	Yes	Screw	Yes-Gold Plated Relays**	70 mm (2.76")
IOD-4DORE-S-S*	4 DO	Yes	Yes	Screw	Yes-Gold Plated Relays**	70 mm (2.76")
IO-16UIO-S-P	16 UIO	No	Yes	Push	No	105 mm (4.13")
IOD-16UIO-S-P	16 UIO	Yes	Yes	Push	No	105 mm (4.13")
IO-16UI-S-P	16 UI	No	Yes	Push	No	105 mm (4.13")
IO-16DI-S-P	16 DI	No	Yes	Push	No	105 mm (4.13")
IO-8DOR-S-P	8 DO	No	Yes	Push	Yes	105 mm (4.13")
IOD-8DOR-S-P	8 DO	Yes	Yes	Push	Yes	105 mm (4.13")
IO-8UIO-S-P*	8 UIO	No	Yes	Push	No	70 mm (2.76")
IOD-8UIO-S-P*	8 UIO	Yes	Yes	Push	No	70 mm (2.76")
IO-8AO-S-P*	8 AO	No	Yes	Push	No	70 mm (2.76")
IOD-8AO-S-P*	8 AO	Yes	Yes	Push	No	70 mm (2.76")
IO-4UIO-S-P*	4 UIO	No	Yes	Push	No	70 mm (2.76")
IOD-4UIO-S-P*	4 UIO	Yes	Yes	Push	No	70 mm (2.76")
IO-8DI-S-P*	8 DI	No	Yes	Push	No	70 mm (2.76")
IO-4DOR-S-P*	4 DO	No	Yes	Push	Yes	70 mm (2.76")
IOD-4DOR-S-P*	4 DO	Yes	Yes	Push	Yes	70 mm (2.76")
IO-4DORE-S-P*	4 DO	No	Yes	Push	Yes-Gold Plated Relays**	70 mm (2.76")
IOD-4DORE-S-P*	4 DO	Yes	Yes	Push	Yes-Gold Plated Relays**	70 mm (2.76")

NOTES:
- *70 mm (2.76") I/O modules are not supported by the CPO-PC500 and CPO-PC600 Controllers.
- **Refer to the relay ratings on the IO Characteristics table.
- I/O module part numbers ending with "P" (push terminals) are not available for purchasing in America.

Compatibility

Table 7. Compatibility

Controller Type	Models
CPO controllers NOTE: Only 105 mm (4.13") I/O modules are supported by the CPO controllers.	CPO-PC500 CPO-PC600
Niagara controllers	N-ADV-134-H, N-ADV-133-H, and N-ADV-112-H. EHNX (EagleHawk) and CPNX in combination with the IO-ADPT-S-2 Wiring Adapter.

I/O Terminal Cover Labels

The Optimizer Workbench, or the Comfort & Energy Workbench provide the option to print out I/O Terminal Labels. The printed labels include:

- Controller name
  Example: Ctr: AHU_1
  Name of the Controller controlling the IO module

- Panel Bus™ port number
  Example: RS485_R
  Number of the port: RS485_R, RS485_1, RS485_2, RS485_3 or RS485_4

- IO module address (00-15)
  Example: 01
  00-15 = Defined

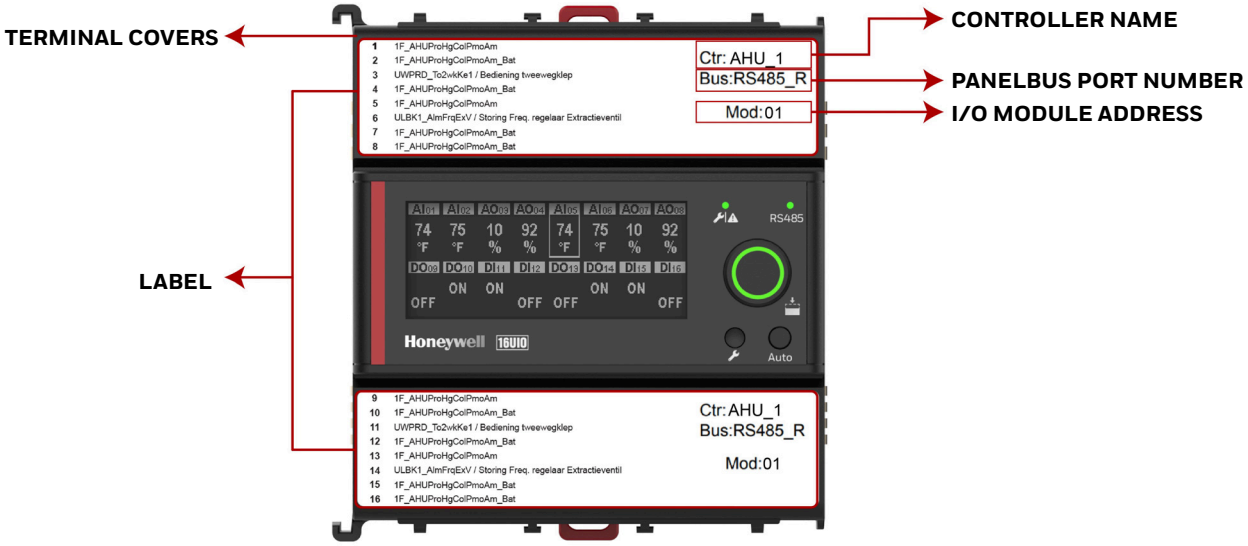

Fig. 1. Terminal Cover Labels

The labels can be applied to the terminal covers of the I/O module from the Optimizer Workbench tool and Comfort & Energy Workbench tool. For detailed instructions, refer to the Panel Bus Driver Guide (31-00591).

Print Standard for Label

Use the Avery Label website and find the "Avery Design and Print" section on the website to configure and customize the print. For sizes and region, refer to the Table 8. Template and label size.

I/O modules (105 mm): Large Cover for 16UIO, 16UI, 16DI, 8DOR

I/O Modules (70 mm): Small Cover for 8UIO, 8AO, 8DI, 4UIO, 4DOR, 4DORE

Table 8. Template and label size

Region	Label size	Dimension	Template number	Label quantity per terminal cover	Format
Americas	Large - 105 mm IO modules	1" x 4"	94202	1	N/A
	Small - 70 mm IO modules	1" x 2.625"	94200	1	N/A
Germany/Austria/ Switzerland	Large - 105 mm IO modules	50x25 mm	50x25-R	2	A4
	Small - 70 mm IO modules	70x25,4 mm	70x25-R	1	A4
UK/Spain/Italy/France/ Netherlands/Belgium	Large - 105 mm IO modules	46x25 mm	46x25-R	2	A4
	Small - 70 mm IO modules	60x25 mm	60x25-R	1	A4
Australia	Large - 105 mm IO modules	98 x 25,4 mm	98x25-R	1	A4
	Small - 70 mm IO modules	70x25 mm	70x25-R	1	A4

Material: Removable Matte White Paper.

I/O Characteristics

Table 9. I/O Characteristics

I/O Type	Sensor Type
Analog input	• Software configurable as a Voltage Input, Current Input or as a Thermistor Input • Voltage Input: — 0 to 10 VDC (Direct/Reverse) — 2 to 10 VDC (Direct/Reverse) — 16 bit resolution — Custom characteristic available in the tool — Minimum resolution of 0.01 volts for 0-10 and 2-10 volt types — +/-0.4 % of FSR (Full Scale Range) for voltage input • Current Input: — 0 to 20 mA (Direct/Reverse) — 4 to 20 mA (Direct/Reverse) — 0 to 10 mA (Direct/Reverse) — 4 to 10 mA (Direct/Reverse) — 16 bit resolution — Custom characteristic available in the tool — +/- 0.55 % of FSR (Full Scale Range) • Thermistor Input: — 16 bit resolution — Input range 0 to 1M ohm — Custom characteristic available in the tool — <= 1 % of accuracy • Configurable offset per Input
UIO/Digital Input	• UIO/DI channels work with volt-free contacts, logic circuits, open collector (transistor), or open-drain (FET). • MSI and Accumulator points are displayed as DI points on the HOA display. **Dry contact 0 to 10 VDC typical (40 VDC maximum) - Direct/Reverse** — Closed contact: <= 500 ohm. Voltage: 0 to 2 VDC. Short circuit current: >= 4 mA — Wetting current: 3.5 mA — Open contact: >= 3K ohm. Voltage: 4 to 40 VDC **Voltage input 0 to 10 VDC typical (40 VDC maximum) - Direct/Reverse** — Voltage: 0 to 2 VDC. Short circuit current: >= 4 mA — Voltage: 4 to 40 VDC or open circuit **Pulse inputs with totalizing** — 100 Hz max. Minimum duty cycle (50 %/50 %) = 5 ms ON / 5 ms OFF

Table 9. I/O Characteristics (Continued)

<table>
<tr><th>I/O Type</th><th>Sensor Type</th></tr>
<tr><td>Digital Output</td><td>

Supports a mix of low voltage and line voltage loads in the same I/O module.
105 mm I/O modules: Channels 1-4 are Relay Block 1 and Channels 5-8 are Relay Block 2.

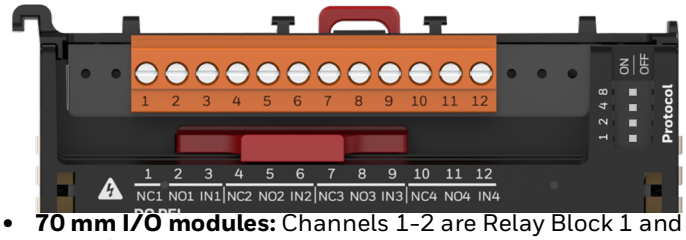

70 mm I/O modules: Channels 1-2 are Relay Block 1 and Channels 3-4 are Relay Block 2.

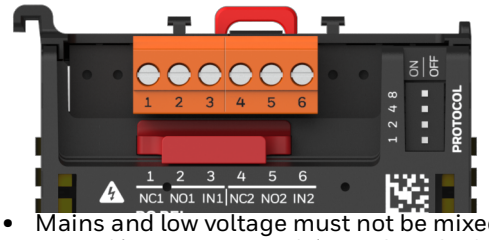

Mains and low voltage must not be mixed within relay block 1 (ch.1-4 on 8DO, ch.1-2 on 4DO) or relay block 2 (ch.5-8 on 8DO, ch.3-4 on 4DO). If both mains and low voltage are to be switched, connect mains to block 1 and low voltage to block 2, or vice versa.
Max Load for 8DO Module (Total):
— 19 to 250 VAC: 12 A
— 12 to 30 VDC: 12 A

<table>
<tr><th colspan="2">Module Type</th><th colspan="2">8DOR</th><th colspan="2">4DOR, 4DORE</th></tr>
<tr><th colspan="2">Channel Number</th><th>1-4, 6-8</th><th>5</th><th>1,2,4</th><th>3</th></tr>
<tr><td rowspan="3">Voltage</td><td>VAC</td><td colspan="2">19 to 250</td><td colspan="2">19 to 250</td></tr>
<tr><td rowspan="2">VDC</td><td colspan="2" rowspan="2">12 to 30</td><td colspan="2">12 to 30 (4DOR)</td></tr>
<tr><td colspan="2">2 to 30 (4DORE)</td></tr>
<tr><td rowspan="4">Current</td><td>resistive</td><td>5 A</td><td>10 A</td><td>5 A</td><td>10A</td></tr>
<tr><td>inductive</td><td>3 A</td><td>6 A</td><td>3 A</td><td>6A</td></tr>
<tr><td>inrush (max)</td><td>7.5 A</td><td>15 A</td><td>7.5 A</td><td>15A</td></tr>
<tr><td rowspan="2">minimum</td><td colspan="2" rowspan="2">10 mA</td><td colspan="2">10 mA (4DOR)</td></tr>
<tr><td colspan="2">2 VDC @ 25 mA (4DORE)</td></tr>
</table>

Any two DO channels are software configurable for floating control (one channel in the open direction and the other channel in the close direction). Open Run Time and Close Run Time are set in the Optimizer Workbench tool or the Comfort & Energy Workbench tool. Not available in the CPO Studio tool.
Supports a software configurable safety position per DO channel in the event of a communication loss with the controller.
MSO points are displayed as DO points on the HOA display.

</td></tr>
</table>

Table 9. I/O Characteristics (Continued)

I/O Type	Sensor Type
UIO/Analog Output	• Software configurable as a Voltage Output, Current Output or as a Floating Output. • Voltage Output: 20 mA — 0 to 11 VDC (Direct/Reverse) — 0 to 10 VDC (Direct/Reverse) — 1 to 10 VDC (Direct/Reverse) — 2 to 10 VDC (Direct/Reverse) — 13 bit resolution • Current Output: — 0 to 20 mA (Direct/Reverse) — 4 to 20 mA (Direct/Reverse) — 13 bit resolution • Supports a software configurable safety position per UIO (AO) channel in the event of a communication loss with the controller.
UIO	• AI, AO, DI, and DO option per UIO channel. • Digital Output Option of 0 to 10 VDC with a max output of 20 mA. • Any two of the UIO channels are software configurable as Digital Outputs for floating control (one channel in the open direction and the other channel in the close direction). Open Run Time and Close Run Time are set in the Optimizer Workbench tool or the Comfort & Energy Workbench tool. Not available in the CPO Studio tool. • Supports a software configurable safety position per UIO (AO/DO) channel in the event of a communication loss with the controller. • 24 VDC/GND for externally powered sensors.

Supported Sensors (Sensor Scaling in the I/O Module)

Table 10. Supported Sensors

Type	Sensor	Model/Type	Range
Thermistor Input	Temperature	10K3A1	-40 to 257 °F (-40 to 125 °C)
	Temperature	BALCO 500	-40 to 302 °F (-40 to 150 °C)
	Temperature	Johnson Control A99	-40 to 248 °F (-40 to 120 °C)
	Temperature	NI1000TK5000	-22 to 266 °F (-30 to 130 °C)
	Temperature	NI1000TK6180	-40 to 302 °F (-40 to 150 °C)
	Temperature	NTC2K ohm	-49 to 125.6 °F (-45 to 52 °C)
	Temperature	NTC3K ohm	-34.6 to 240 °F (-37 to 115.5 °C)
	Temperature	NTC10K ohm	-22 to 212 °F (-30 to 100 °C)
	Temperature	NTC10K3	-34.6 to 240 °F (-37 to 115.5 °C)
	Temperature	NTC20K ohm	-58 to 302 °F (-50 to 150 °C)
	Temperature	Nickel Class B DIN 43760	-76 to 336.2 °F (-60 to 169 °C)
	Temperature	PRECON 10K Type 2	-34.6 to 240 °F (-37 to 115.5 °C)
	Temperature	PRECON 10K Type 3	-34.6 to 240 °F (-37 to 115.5 °C)
	Temperature	PRECON 20K Type 4	-34.6 to 240 °F (-37 to 115.5 °C)
	Temperature	PT100	-58 to 482 °F (-50 to 250 °C)
	Temperature	PT1000-1	-58 to 302 °F (-50 to 150 °C)
	Temperature	PT1000-2	32 to 752 °F (0 to 400 °C)
	Temperature	PT1000 (IEC751 3850)	-40 to 199.4 °F (-40 to 93 °C)
	Temperature	PT3000	-58 to 302 °F (-50 to 150 °C)
	Temperature	RCC2K ohm	-49.9 to 124.1 °F (-45.5 to 51.7 °C)
Current Input	Pressure	MLH050PSCDJ1235; 4 to 20 mA	0 to 50 psig
	Pressure	MLH150PSCDJ1236; 4 to 20 mA	0 to 150 psig
	Pressure	MLH300PSCDJ1237; 4 to 20 mA	0 to 300 psig
	Pressure	MLH500PSCDJ1240; 4 to 20 mA	0 to 500 psig
	Pressure	MLH01KPSCDJ1241; 4 to 20 mA	0 to 1000 psig
	Light Sensor	ALS-300 (708100000); 19.25 to 4.25 mA	0 to 300 fc
	Light Sensor	ALS-1.5K (708101000); 19.25 to 4.25 mA	0 to 1500 fc
	Space Light Sensor	LLO; 4 to 20 mA	0 to 1000 lux
	Space Light Sensor	LLO; 4 to 20 mA	0 to 2000 lux
	Space Light Sensor	LLO; 4 to 20 mA	0 to 4000 lux
	Space Light Sensor	LLO; 4 to 20 mA	0 to 8000 lux
	Space Light Sensor	LLO; 4 to 20 mA	0 to 20000 lux

Table 10. Supported Sensors (Continued)

Type	Sensor	Model/Type	Range
Current Input	Outdoor Light Sensor	LLS; 4 to 20 mA	0 to 1000 lux
	Outdoor Light Sensor	LLS; 4 to 20 mA	0 to 2000 lux
	Outdoor Light Sensor	LLS; 4 to 20 mA	0 to 4000 lux
	Outdoor Light Sensor	LLS; 4 to 20 mA	0 to 8000 lux
	Outdoor Light Sensor	LLS; 4 to 20 mA	0 to 20000 lux
Voltage Input	Relative Humidity	0 to 10 VDC	0 to 100 %
	Relative Humidity	2 to 10 VDC	0 to 100 %
	Pressure	7330900; 1 to 5 VDC	0 to 100 psig
	Pressure	7330910; 1 to 5 VDC	0 to 400 psig
	Pressure	RCC-SP150-2; 0.5 to 4.5 VDC	0 to 150 psig
	Pressure	RCC-SP150-5; 0.5 to 4.5 VDC	0 to 150 psig
	Pressure	RCC-SP150-M; 0.5 to 4.5 VDC	0 to 150 psig
	Pressure	RCC-SP300-2; 0.5 to 4.5 VDC	0 to 300 psig
	Pressure	RCC-SP300-5; 0.5 to 4.5 VDC	0 to 300 psig
	Pressure	RCC-SP300-M; 0.5 to 4.5 VDC	0 to 300 psig
	Pressure	RCC-SP500-2; 0.5 to 4.5 VDC	0 to 500 psig
	Pressure	RCC-SP500-5; 0.5 to 4.5 VDC	0 to 500 psig
	Pressure	RCC-SP500-M; 0.5 to 4.5 VDC	0 to 500 psig
	CO2	0 to 10 VDC	0 to 2000 ppm
	Pressure	0 to 10 VDC	0 to 5 inches of WC
	Pressure	0 to 10 VDC	0 to 2.5 inches of WC
	Pressure	0 to 10 VDC	0 to 0.25 inches of WC

General Information on the RS485 Standard

According to the RS485 standard (TIA/EIA-485: "Electrical Characteristics of Generators and Receivers for Use in Balanced Digital Multipoint Systems"), only one driver communicating via an RS485 interface may transmit data at a time. Further, according to U.L. requirements, each RS485 interface may be loaded with a max. of 32 unit loads.

BACnet™ MSTP connections to the RS485 interfaces must comply with the aforementioned RS485 standard. Thus, it is recommended that each end of every communication bus be equipped with one termination resistor having a resistance equal to the cable impedance (90 – 120 ohm/ 0.25 – 0.5 W).

RS485 systems frequently lack a separate signal reference wire. However, the recommended wiring is to provide a solid signal ground (signal reference) connection in order to ensure error-free communication between drivers and receivers – unless all of the devices are electrically isolated and no earth grounding exists.

Under ideal conditions, the RS485 connection can have a max. length of 3937 ft (1200 meters). However, the longer the cable, the lower the transmission rate. As a rule of thumb, the transmission rate (in bps) multiplied by the cable length (in meters) should not exceed 100 million. For example, a system with a cable 3281 ft (1000 meters) long should not be required to transmit data at rates exceeding 100 Kbps. The following table provides a few examples.

Table 11. Baud rate vs. max. cable length for RS485

Baud Rate	Max. Cable Length (L)
9.6 kbps	3937 ft (1200 m)
19.2 kbps	3937 ft(1200 m)
*38.4 kbps	3937 ft(1200 m)
***56 kbps	3937 ft(1200 m)
76.8 kbps	3937 ft (1200 m)
**115.2 kbps	2625 ft (800 m)

* In the case of configuration of RS485 interface of an I/O module for Field Bus, the communication rate will be automatically set to 38.4 Kbps.

** In the case of configuration of RS485 interface of an I/O module for Panel Bus™, the communication rate will be automatically set to 115.2 Kbps.

*** In the case of configuration of RS485 interface of an I/O module for CP-IO Bus, the communication rate will be automatically set to 56 Kbps.

For information on wire gauge, max. permissible cable length, possible shielding and grounding requirements, and the max. number of devices which can be connected to a bus, refer to standard EIA-485.

POWER SUPPLY (EXTERNAL)

WARNING

Risk of electric shock or equipment damage!

Transformers

Honeywell Transformers

A transformer can power the I/O module. When determining total current consumption and selecting the appropriate transformer, take into account the number of connected modules, accessories, and field devices.

NOTE: In Europe, system transformer(s) must be safety isolating transformers according to IEC61558-2-6. In the U.S.A. and Canada, NEC Class-2 transformers must be used.

Table 12. Honeywell CRT Series Transformers (Europe)

Part No.	Primary Side	Secondary Side
CRT 2	220/230 VAC	24 VAC, 50 VA, 2 A
CRT 6	220/230 VAC	24 VAC, 150 VA, 6 A
CRT 12	220/230 VAC	24 VAC, 300 VA, 12 A

Table 13. Honeywell 1450 Series Transformers (N. America)

Part No. 14507287	Primary Side	Secondary Side
-001	120 VAC	24 VAC, 50 VA
-002	120 VAC	2 x 24 VAC, 40 VA; 100 VA from separate transformer
-003	120 VAC	24 VAC, 100 VA; 24 VDC; 600 mA
-004	240/220 VAC	24 VAC, 50 VA
-005	240/220 VAC	2 x 24 VAC, 40 VA; 100 VA from separate transformer
-006	240/220 VAC	24 VAC, 100 VA; 24 VDC, 600 mA

NOTE: Standard commercially available transformers can power the I/O module.

Switch Mode Power Supply

To reduce overall current consumption, the I/O module can be powered by a switch mode dc power supply (rather than by a transformer). For Europe, refer to the below table.

Table 14. Recommended Power Supply

Model Number	DCPSU-24-1.3	DCPSU-24-2.5	DCPSU-24-4
Derating input voltage	Max. 1 A (<100 VAC)	Max. 2 A (<100 VAC) 1.8 A (<90 VAC)	Max. 3.5 A (<100 VAC) 3 A (<90 VAC)
Rated input current (nominal load) 110/230 VAC	0.7/0.5 A	1.4/0.6 A	1.6/0.9 A
Internal fuse	2 AT		4 AT
Mains drop compensation at nominal load 110/230 VAC	10/80 ms		18/100 ms
Rated output current	1.3 A <113 °F (45 °C) 0.9 A <131 °F (55°C)	2.5 A <113 °F (45°C) 1.75 A <131 °F (55°C)	4 A <113 °F (45 °C) 2.8 A <131 °F (55 °C)
Efficiency	82 % typ.	88 % typ.	

I/O MODULE POWER CONSUMPTION

Table 15. Plant controller & Wiring Adapter Resettable Fuse Current Rating vs Temperature

Device		Temperature	Current Rating (A)
Wiring Adapter	NA	-40 °F (-40 °C)	5.1
	Controller	-22 °F (-30 °C)	4.8
		-4 °F (-20 °C)	4.5
		-14 °F (-10 °C)	4.2
		32 °F (0 °C)	3.9
		50 °F (10 °C)	3.6
		68 °F (20 °C)	3.4
		86 °F (30 °C)	3
		104 °F (40 °C)	2.6
		140 °F (60 °C)	2.2
	NA	150 °F (65.5 °C)	2

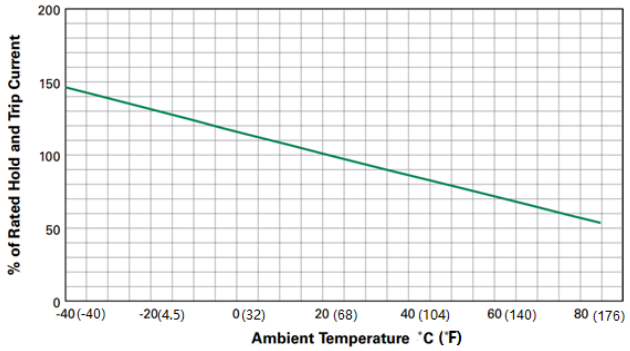

Fig. 2. Temperature Derating Curve

I/O Module Basic Power Consumption

Table 16. I/O Module Basic Current Consumption per I/O Module

I/O Module Types	Basic Current Consumption				
	Input/Output Status	Current @24VAC (A)	Current @ 24VDC (A)	Power @ 24VAC (VA)	Power @ 24VDC (W)
IO-16UIO IOD-16UIO IO-8UIO IOD-8UIO IO-8AO IOD-8AO IO-4UIO IOD-4UIO	No channels enabled	0.31	0.1	7.44	2.4
IO-16DI IO-8DI	No channels enabled	0.14	0.045	3.36	1.08
IO-8DOR IOD-8DOR IO-4DOR IOD-4DOR IO-4DORE IOD-4DORE	No channels enabled	0.135	0.04	3.24	0.96
IO-16UI	No channels enabled	0.31	0.1	7.44	2.4

Power Consumption of 1 (single) Channel

Table 17. Power Consumption of 1 (single) Channel

I/O Module Types	1 Channel Current Consumption				
	Input/Output Status	Current @ 24VAC (A)	Current @ 24VDC (A)	Power @ 24VAC (VA)	Power @ 24VDC (W)
IO-16UIO IOD-16UIO IO-8UIO IOD-8UIO IO-8AO IOD-8AO IO-4UIO IOD-4UIO	1 Channel Configured as AO/DO (max 10 V and 20 mA)	0.035	0.02	0.84	0.48
	1 Channel Configured as AI (Thermistor/Voltage sensor/Current sensor)	0.02	0.01	0.48	0.24
	1 Channel Configured as DI - Input is ON	0.02	0.01	0.48	0.24
IO-16DI IO-8DI	1 DI Channel - Input is ON	0.015	0.005	0.36	0.12
IO-8DOR IOD-8DOR IO-4DOR IOD-4DOR IO-4DORE IOD-4DORE	1 Relay Channel - Output is ON	0.025	0.01	0.6	0.24
IO-16UI	1 Channel Configured as AI (Thermistor/Voltage sensor/Current sensor)	0.02	0.01	0.6	0.24
	1 Channel Configured as DI - Input is ON	0.02	0.01	0.6	0.24

Current Consumption Calculation

Add Basic Current Consumption (Table 16) + 1 Channel Current Consumption (Table 17) * Number of channels.

NOTE: If UIO 24 VDC/75 mA output interface are fully loaded, add +0.12 A for 24 VAC power and +0.08A for 24 VDC power.

I/O Module Maximum Current Consumption (105 mm device)

Table 18. I/O Module Maximum Current Consumption per I/O Module (105 mm device)

I/O Module Types	Maximum Current Consumption from All Channels including the I/O module				
	Input/Output Status	**Current @24VAC (A)**	**Current @ 24VDC (A)**	**Power @ 24VAC (VA)**	**Power @ 24VDC (W)**
IO-16UIO IOD-16UIO	All 16 Channels Configured as AO/DO (max 10 V and 20 mA)	1	0.5	24	12
	All 16 Channels Configured as AI (Thermistor/Voltage sensor/Current sensor)	0.76	0.34	18.3	8.2
	All 16 Channels Configured as DI - Inputs are ON	0.76	0.34	18.3	8.2
IO-16DI	All 16DI Channels - Inputs are ON	0.38	0.12	9.2	3
IO-8DOR IOD-8DOR	All 8 Relay Channels - Outputs are ON	0.33	0.12	8	3
IO-16UI	All 16 Channels Configured as AI (Thermistor/Voltage sensor/Current sensor)	0.76	0.34	18.3	8.2
	All 16 Channels Configured as DI - Inputs are ON	0.76	0.34	18.3	8.2

I/O Module Maximum Current Consumption (70 mm device)

Table 19. I/O Module Maximum Current Consumption per I/O Module (70 mm device)

I/O Module Types	Maximum Current Consumption from All Channels including the I/O module				
	Input/Output Status	**Current @24VAC (A)**	**Current @ 24VDC (A)**	**Power @ 24VAC (VA)**	**Power @ 24VDC (W)**
IO-8UIO IOD-8UIO	All 8 Channels Configured as AO/DO (max 10 V and 20 mA)	0.72	0.34	17.3	8.2
	All 8 Channels Configured as AI (Thermistor/Voltage sensor/Current sensor)	0.6	0.31	14.4	7.4
	All 8 Channels Configured as DI - Inputs are ON	0.6	0.31	14.4	7.4
IO-8AO IOD-8AO	All 8 Channels Configured as AO/DO (max 10 V and 20 mA)	0.59	0.26	14.2	6.2
IO-4UIO IOD-4UIO	All 4 Channels Configured as AO/DO (max 10 V and 20 mA)	0.58	0.26	14	6.2
	All 4 Channels Configured as AI (Thermistor/Voltage sensor/Current sensor)	0.52	0.22	12.5	5.3
	All 4 Channels Configured as DI - Inputs are ON	0.52	0.22	12.5	5.3
IO-8DI	All 8DI Channels - Inputs are ON	0.215	0.085	5.2	2

Table 19. I/O Module Maximum Current Consumption per I/O Module (70 mm device)

I/O Module Types	Maximum Current Consumption from All Channels including the I/O module				
	Input/Output Status	Current @24VAC (A)	Current @ 24VDC (A)	Power @ 24VAC (VA)	Power @ 24VDC (W)
IO-4DOR IOD-4DOR IO-4DORE IOD-4DORE	All 4 Relay Channels - Outputs are ON	0.235	0.08	5.6	2

NOTE: If UIO 24 VDC/75 mA output interface are fully loaded, add +0.12 A for 24 VAC power and +0.08 A for 24 VDC power.

WIRING AND SET-UP

General Safety Considerations

- When connecting the I/O module, VDE, National Electric Code (NEC) or equivalent, and any local regulations concerning grounding must be observed.
- Only qualified electricians may carry out electrical work.
- The electrical connections must be made at the terminals of the I/O module.
- For Europe, only: To comply with CE requirements, devices with a voltage in the range of 50 to 1000 VAC or 75 to 1500 VDC and which are not provided with a supply cord and plug or with other means for disconnection from the supply having a contact separation of at least 0.11" (3 mm) in all poles must have the means for disconnection incorporated in the fixed wiring.
- Only copper conductors should be used for electrical connection.
- Only electrical cables/wires with operating temperature at least 167 °F (75 °C) should be used for electrical connection.

WARNING

Risk of electric shock or equipment damage!

- The controller and other devices on the DIN Rail must be powered off before mounting the I/O modules.
- Do not touch any live parts in the cabinet.
- Disconnect the power supply before making connections to or removing connections from I/O module terminals.
- Do not use spare terminals as wiring support points.
- Do not reconnect the power supply until you have completed the power supply.

CAUTION

Observe the precautions for handling electrostatic devices.

Wiring Terminals

The I/O modules features both screw-type terminals and push-in terminals.

Table 20. Wiring and Power Supply Terminals Specifications for DI/DO/UIO/UI Modules & Wiring Adapter

Terminal Type	Stripping Length	Torque Value	Max.Plug Gauge
Screw	0.236-0.275" (6-7 mm)	4.425 lb-in (0.5 N-m)	12(3.33 mm^2)-26AWG(0.13 mm^2) (UL) 0.2 mm^2 - 2.5 mm^2 (IEC)
Push-in	0.314-0.354" (8-9 mm)	N/A	Solid wiring: 14(2.08 mm^2)-26AWG(0.13 mm^2) (UL) 0.2 mm^2-2.5 mm^2 (IEC) Stranded wiring: 14(2.08 mm^2)-24AWG(0.20 mm^2) (UL) 0.2 mm^2-2.5 mm^2 (IEC)

Terminals support both flexible and solid cables. Wires can be equipped additionally with ferrules.

Connecting Power Supply

Connect the power supply to the power supply terminals of the I/O module.

Earth Grounding

The I/O module comply with SELV (Safety Extra-Low Voltage), so protective earth grounding is not required. However, a functional earth grounding for EMC is mandatory. For more information, refer to “Appendix: Earth Grounding” section on page 53.

Cable Specifications

Power Supply Cable Specifications

The length of the power supply cable includes the length of the cables to connected modules.

Table 21. Power Supply Cable Specifications

Type of signal	Cross-sectional area	
	≤328 ft (100 m) Single transformer	≤328 ft (100 m) Separate transformers
24 V Power	1.5 mm^2-2.5 mm^2 (16AWG-12AWG)	not allowed for > 328 ft (100 m)
High Current Signals - DO Relay version	5A terminal: 1.5 mm^2-2.5 mm^2 (16AWG-12AWG) 10A terminal: 2.5 mm^2 (14AWG-12AWG)	Not applicable
Low Current Signals - UIO, DI	0.5 mm^2-2.5 mm^2 (26AWG - 12AWG)	

NOTES:
- Copper wire only for the terminal block.
- Suggested maximum tighten torque for screw terminal block is 5.0 lb/in or 0.56 N/m.

Panel Bus™ Cable Specifications

Maximum distance between controller and Panel Bus™ I/O is 131 ft (40 m) with any type of cabling and daisy chain topology.

Maximum distance between controller and Panel Bus™ I/O is 2625 ft (800 m) with twisted pair or telephone cable and daisy chain topology.

Controller must be positioned at one end of the Panel Bus™ and an end termination of 120 ohms positioned at the other end or Protective End Cover with built in termination (ENDCOVER-10). Panel Bus™ Communications is polarity insensitive.

Dimensions - I/O Module with HOA (105 mm)

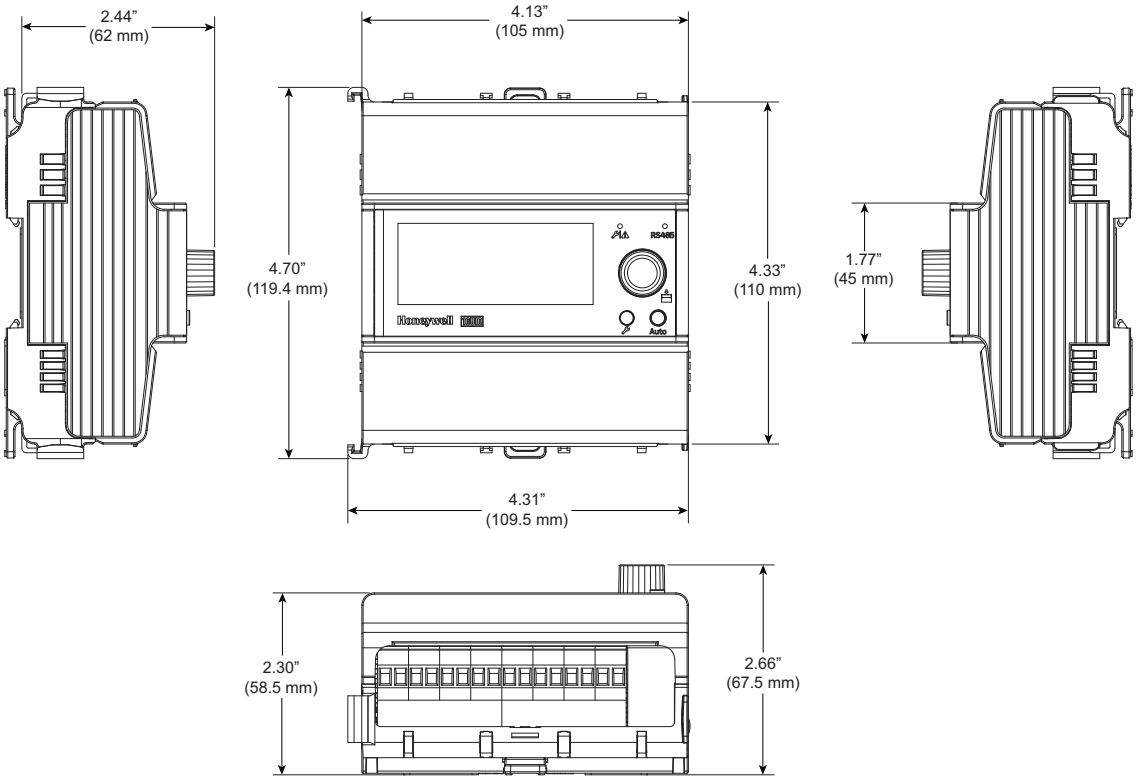

I/O Module without HOA (105 mm)

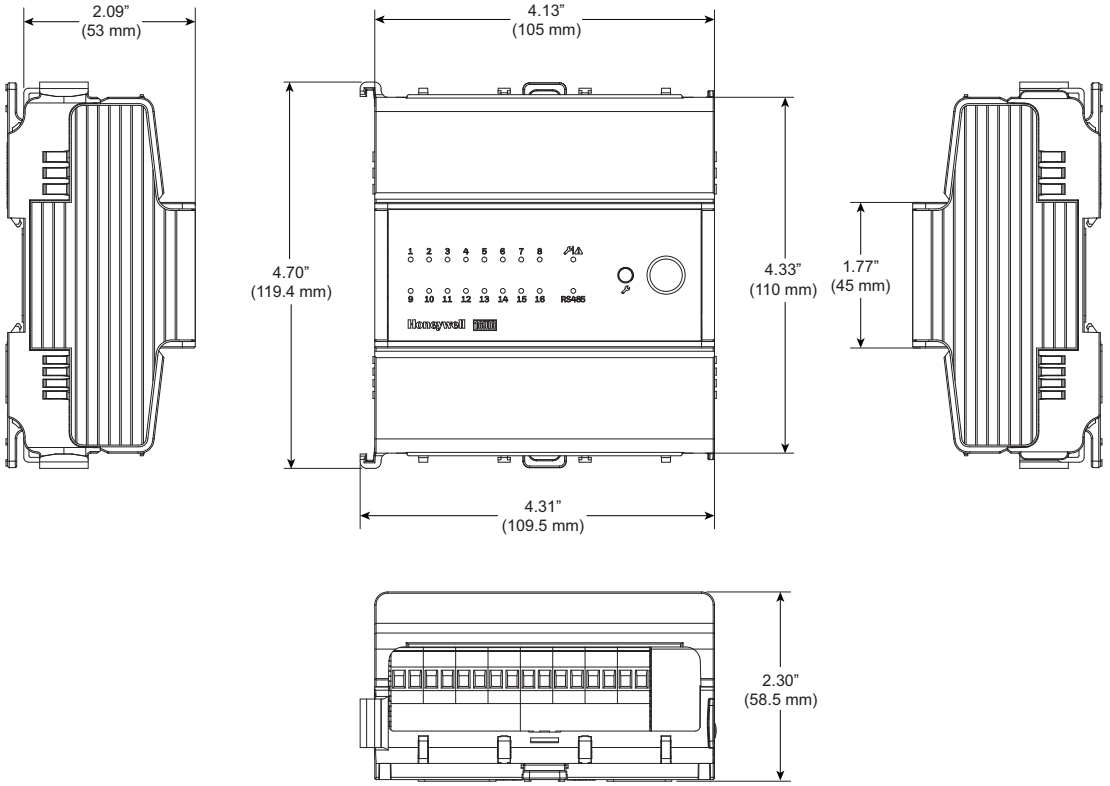

Dimensions - I/O Module with HOA (70 mm)

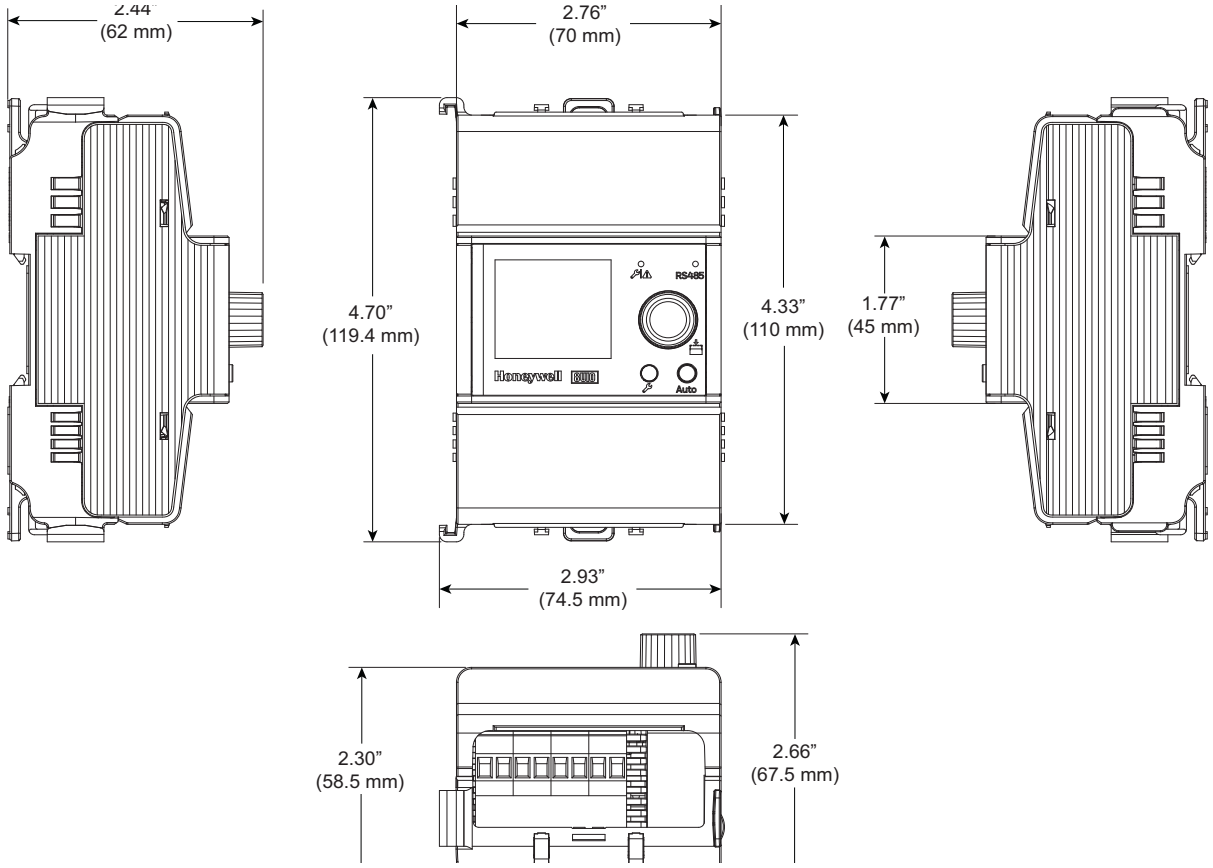

I/O Module without HOA (70 mm)

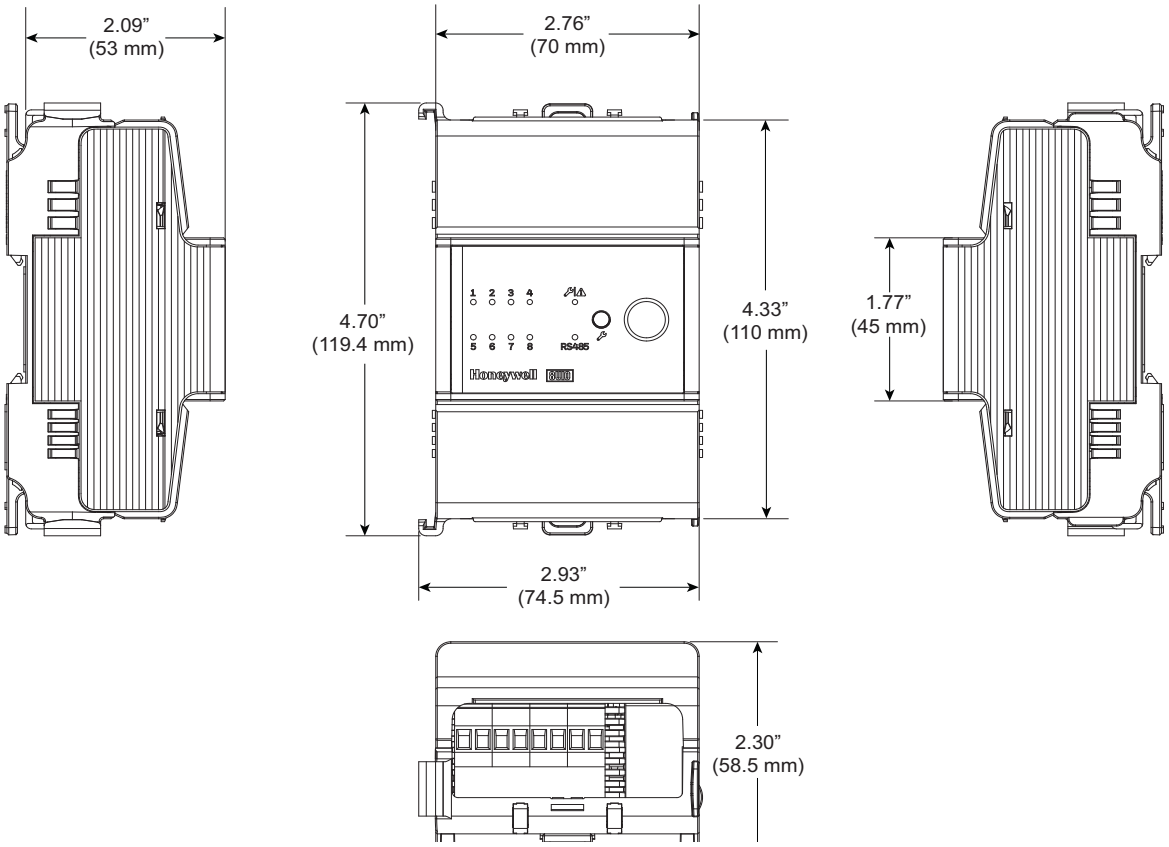

I/O MODULES MOUNTING

The I/O modules can be mounted by snapping onto the controller or mounted remotely. This section is applicable for both 105 mm and 70 mm I/O module devices. However, only 105 mm (4.13") devices are used for illustration purposes and instructions apply to both models.

Review carefully the example diagrams to understand the local and remote mounting and its connections. For more detailed diagrams refer to the figures from Fig. 3 to Fig. 9.

The max allowed power cable length is 328 ft (100 m).

The max allowed communications cable length for connecting room 1 and room 2 is:

- 131 ft (40 m) - any type of cabling and daisy chain topology
- 2625 ft (800 m) - twisted pair or telephone cable and daisy chain topology. The controller must be positioned at one end of the Panel Bus™ and bus termination at the other end.

Example 1: The I/O modules should be connected in series, not in parallel.

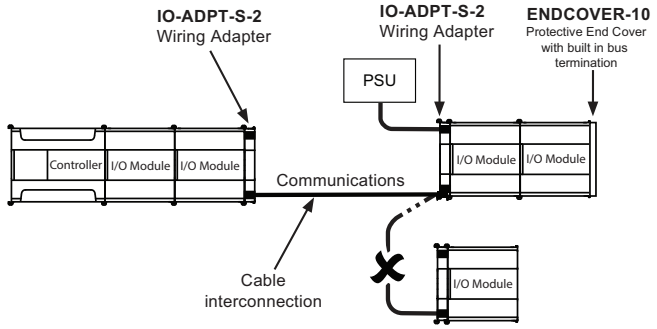

Example 2: The wiring adapter should not be used to Star wire the serial I/O modules.

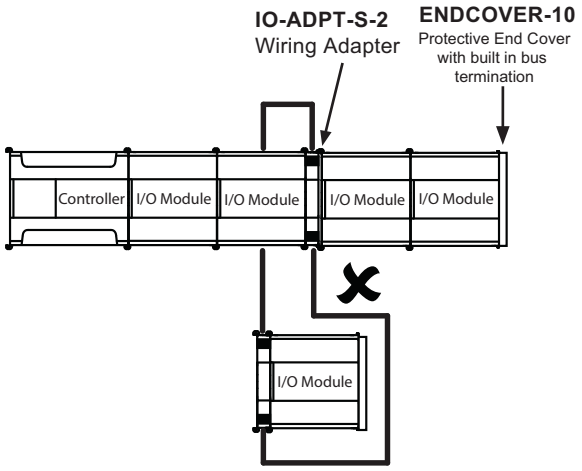

Example 3: Both the communication bus and power are extended to an additional row of I/O modules on a separate DIN rail.

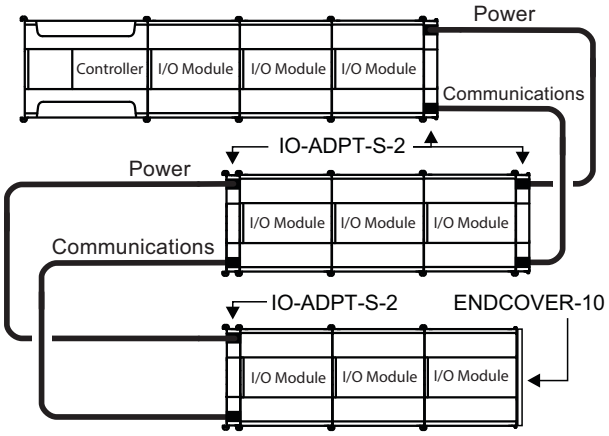

Example 4: The communication bus is extended to an additional row of I/O modules on a separate DIN rail. Power is supplied separately to the I/O modules.

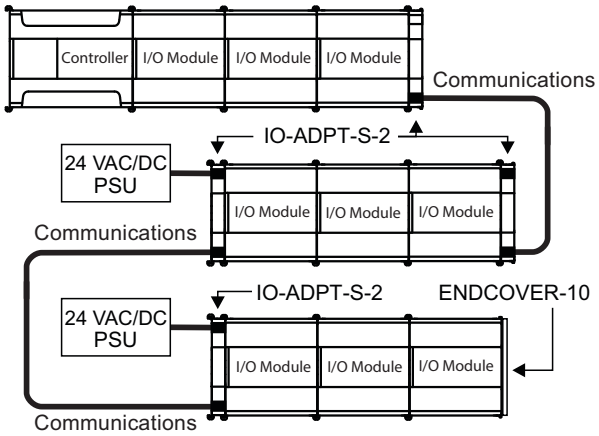

Mounting Precautions

I/O Modules and Wiring Adapter support both Horizontal and Vertical DIN rail mounting on a vertical surface. Do not mount on a horizontal surface.

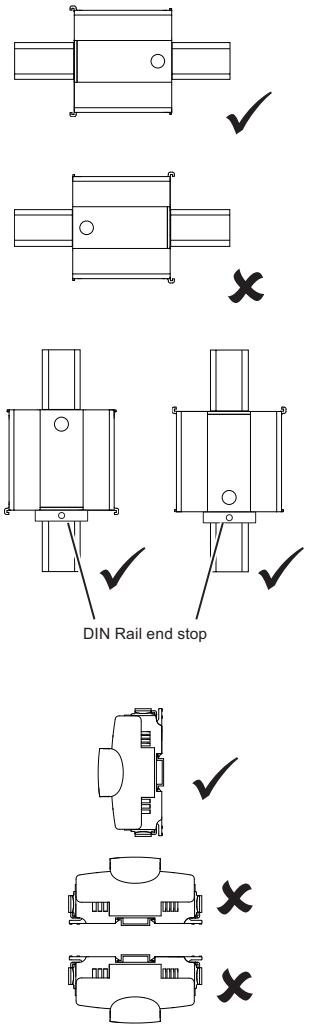

Mounting the I/O Module on a Wall/Panel using DIN Rail

The I/O module mounts to the side of the controller. Remove the protective end cover from the controller to reveal the touch flakes.

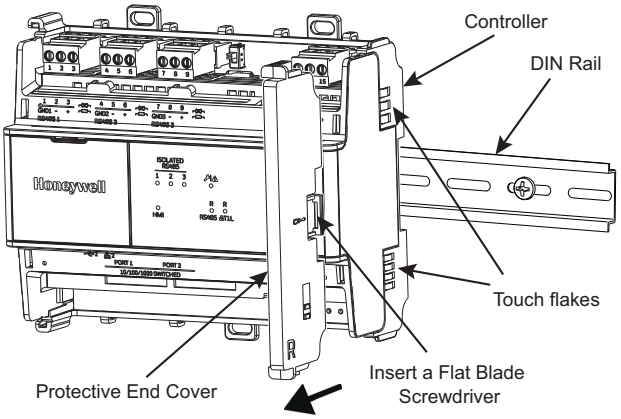

The I/O module connects to the controller touch flakes for the power and communications. To mount the I/O module next to a Wiring Adapter, refer to the “Mounting Wiring Adapter on the DIN Rail” section on page 29.

1. Remove the bottom Terminal Cover from the I/O module. Use your fingers to push the cover upwards as shown in the below figure.

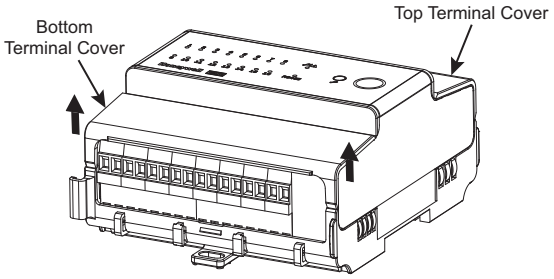

2. Remove the top Terminal Cover as described in the previous step.
3. Extend both red clips to the unlock position as shown in the below figure.

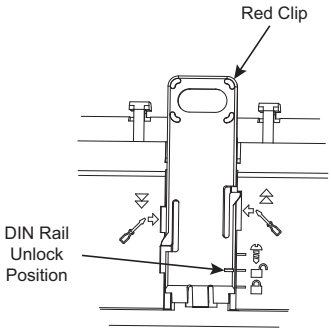

4. Hold the I/O module in an orientation such that the red clip is facing toward the DIN rail.

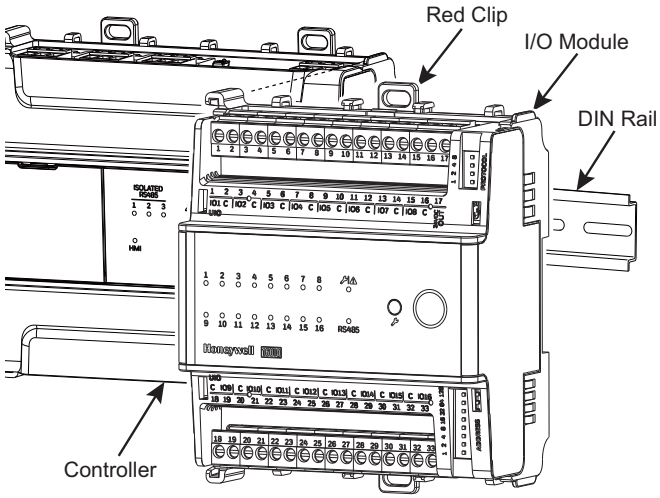

5. Mount the I/O module onto the DIN rail and push both red clips in to secure it in place.
6. Replace the terminal covers.

Installing the Auxiliary Terminal Block (optional)

1. Install the Auxiliary terminal block onto the I/O module by inserting the slots of the auxiliary terminal block into the two hooks of the I/O module and push it till the lock-clip is locked with the I/O module.

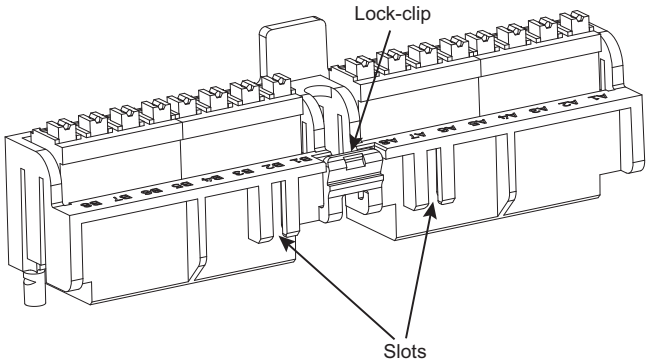

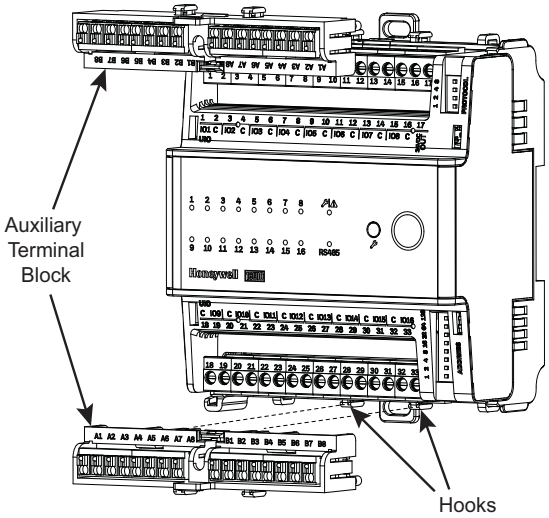

2. Remove the insulation 5 mm from the wires' end by using a stripping tool.
3. Refer to the I/O Module Installation Instructions (31-00589) for wiring connections and insert the wires into the auxiliary terminal blocks.
4. To remove the auxiliary terminal block, insert a flat blade screwdriver into the lock-clip and release it.

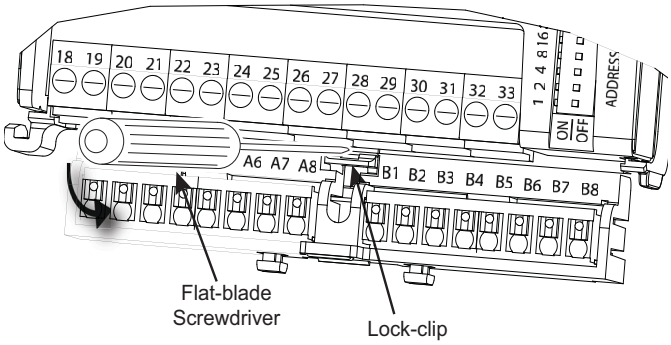

Mounting Wiring Adapter on the DIN Rail

NOTE: Use the Wiring Adapter to extend Power and Comms to the next DIN rail or to extend Power and Comms to a remote I/O module.

1. Remove the adapter cover by pulling out the cover as shown in the below image.

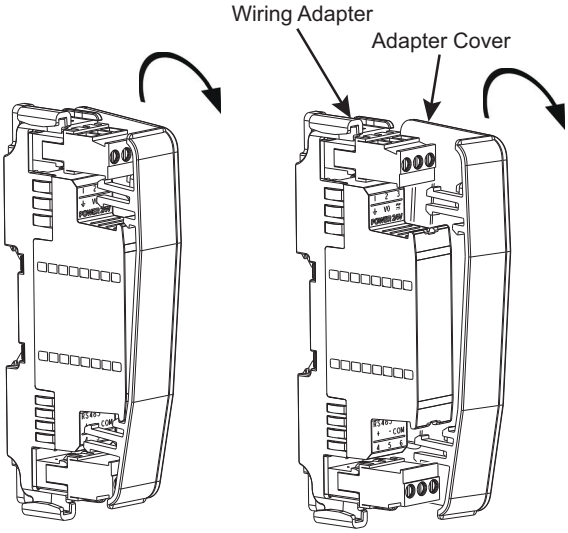

2. Extend the red clips on the wiring adapter to the last position.
3. Hold the wiring adapter in the position as shown below.

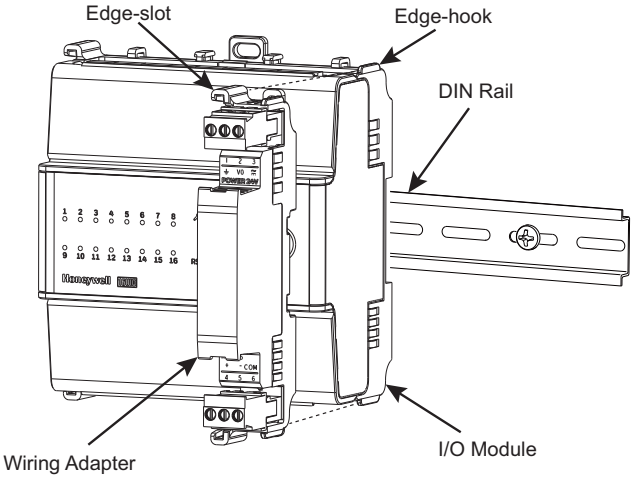

4. For the **right side mounting**, mount the adapter in a way that the edge-slot of the adapter aligns with the axis of the edge-hook of the I/O module to attach and secure them together.

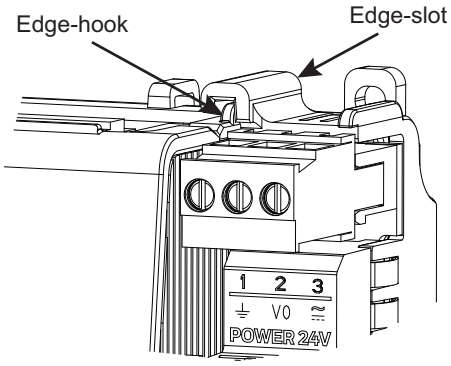

For the **left side mounting**, mount the adapter in a way that the edge-hook of the adapter aligns with the axis of the edge-slot of the I/O module to attach and secure them together.

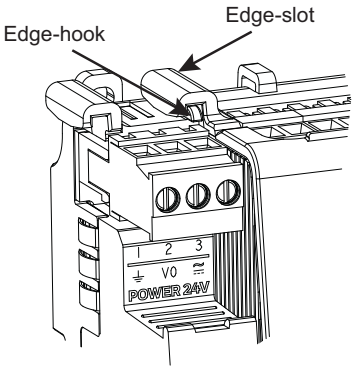

5. The wiring adapter has a reversible cover to safeguard the touch flakes. Place the adapter cover on the side of the wiring adapter to cover the touch flakes that are not being used. Attach the adapter cover by pressing at the location of the clips until both clips are engaged.

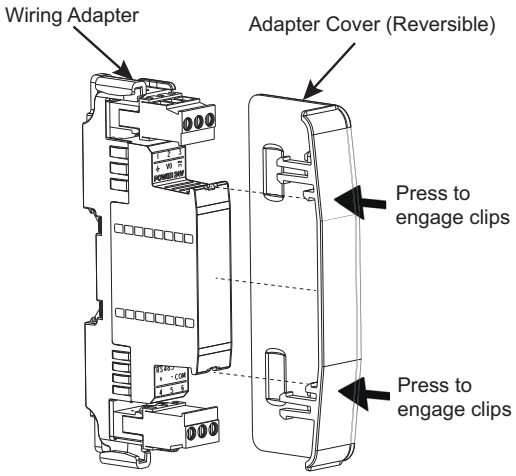

6. On the last I/O module in the panel, mount the protective end cover. Refer to “Protective End Cover” section on page 31.

Protective End Cover

The protective end cover comes factory installed on the controller. Remove the protective end cover from the controller and mount on the last I/O module in the panel. The protective end cover safeguards the touch flakes and provides the end of line bus termination of the RS485 bus.

Mounting Protective End Cover on the last I/O Module

1. For the **right side mounting**, hold the Protective end cover (marked with R) in a way that the edge-slot of the cover aligns with the axis of the edge-hook of the I/O module, and slide along till the bottom clip is locked with the I/O module.

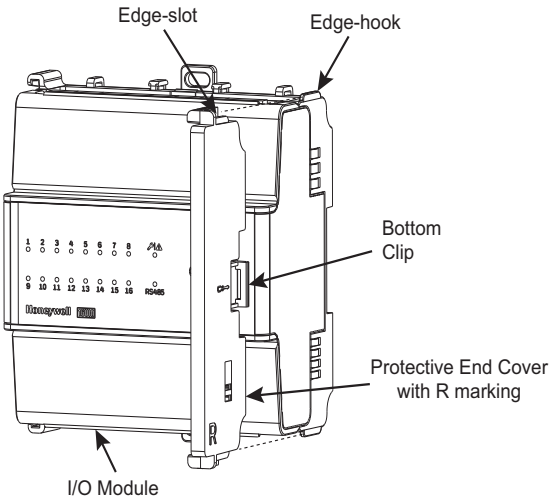

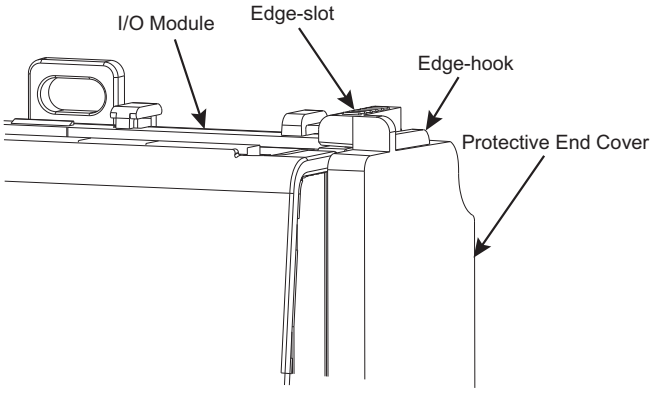

For the **left side mounting**, hold the Protective end cover (marked with L) in a way that the edge-hook of the cover aligns with the axis of the edge-slot of the I/O module, and slide along till the bottom clip is locked with the I/O module.

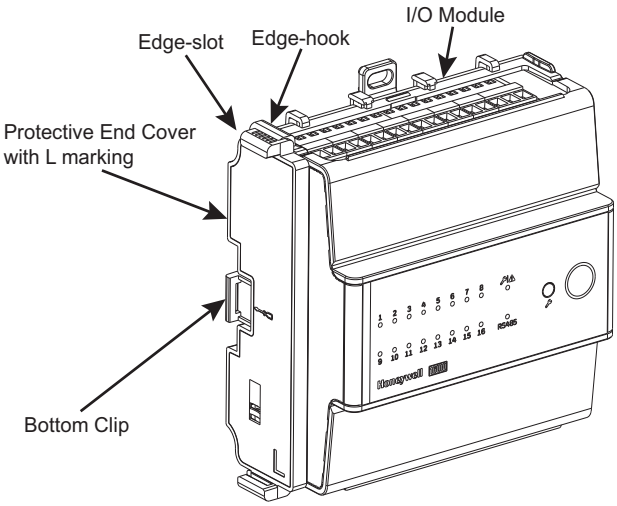

Mounting Jumper Bars on the I/O Module (only for DO relay models)

The DO Relay models of I/O modules include two jumper bars in the carton. One jumper bar is used for the top row of terminals and the other is used for the bottom row of terminals. Each jumper bar connects the "IN" terminals internally.

1. Insert the pins of the jumper into the slots as shown in the below image.

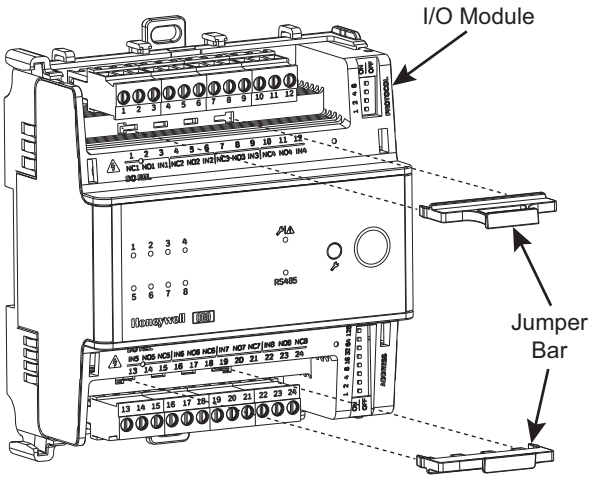

The jumper connects all four “IN” terminals into a single terminal. It enables a single power source connection to one terminal.

If two different power supplies are required to connect, use a needle nose pliers to break off a pin on the jumper bar by bending it back & forth until it breaks and then insert the jumper bar into the slot. This connects only three terminals and the fourth terminal is available for another power supply.

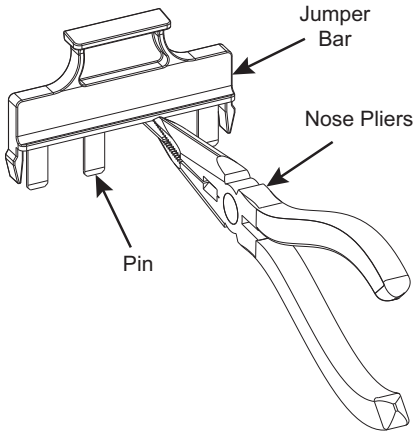

Removing the I/O Module from the DIN Rail

1. Disconnect all the input/output terminals from the I/O module.
2. Remove the protective end cover if you are removing the last I/O module in the panel. Set the protective end cover aside.
3. Hold the I/O module with one hand and insert a flat blade screwdriver into the bottom red clip slot and pull downward. Insert a flat blade screwdriver into the top red clip slot and pull upward.

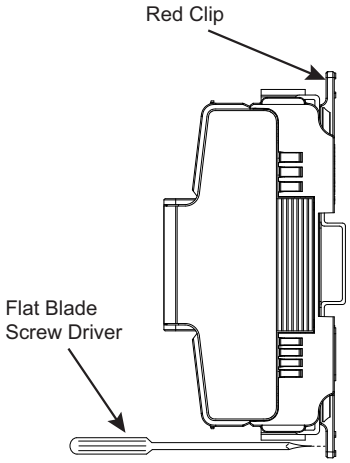

4. After the I/O module is released from the DIN rail, push the edge-slots of the I/O module on four corners.

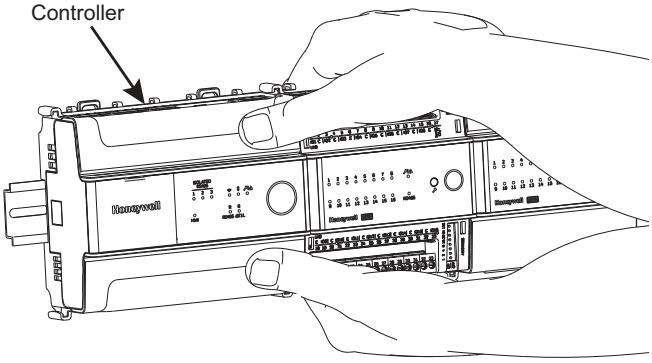

5. After all corners are released, grasp the I/O module and pull straight out.

Connection to I/O Modules Powered by Same Transformer

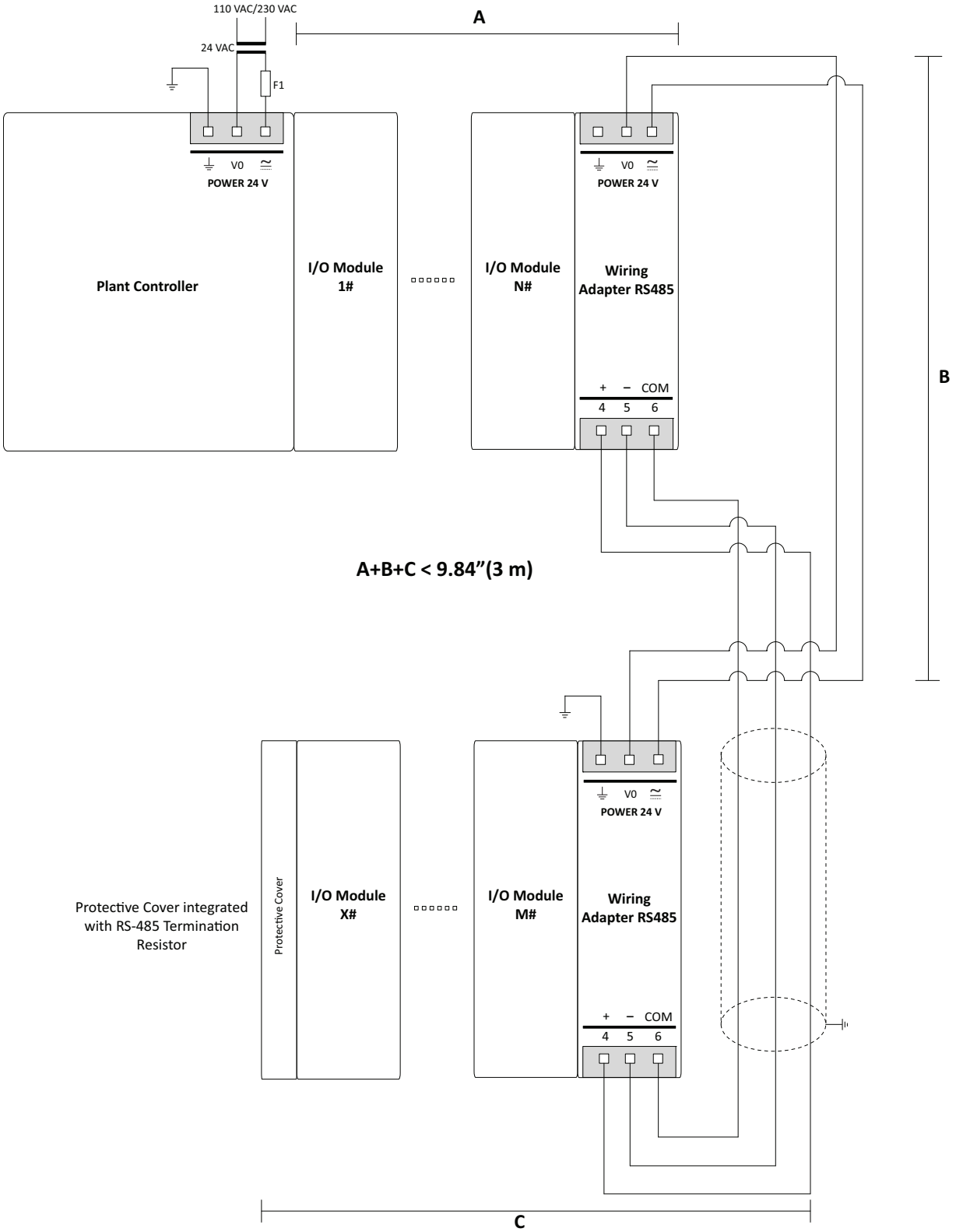

Fig. 3. Power supply via Same Transformer

NOTE: For communication cable lengths, transmission speeds, and termination “General Information on the RS485 Standard” section on page 19. For wiring, refer to the “I/O Module Power consumption” section on page 20. For power, refer to the “Power Supply (External)” section on page 19.

Power supply via External Power Source

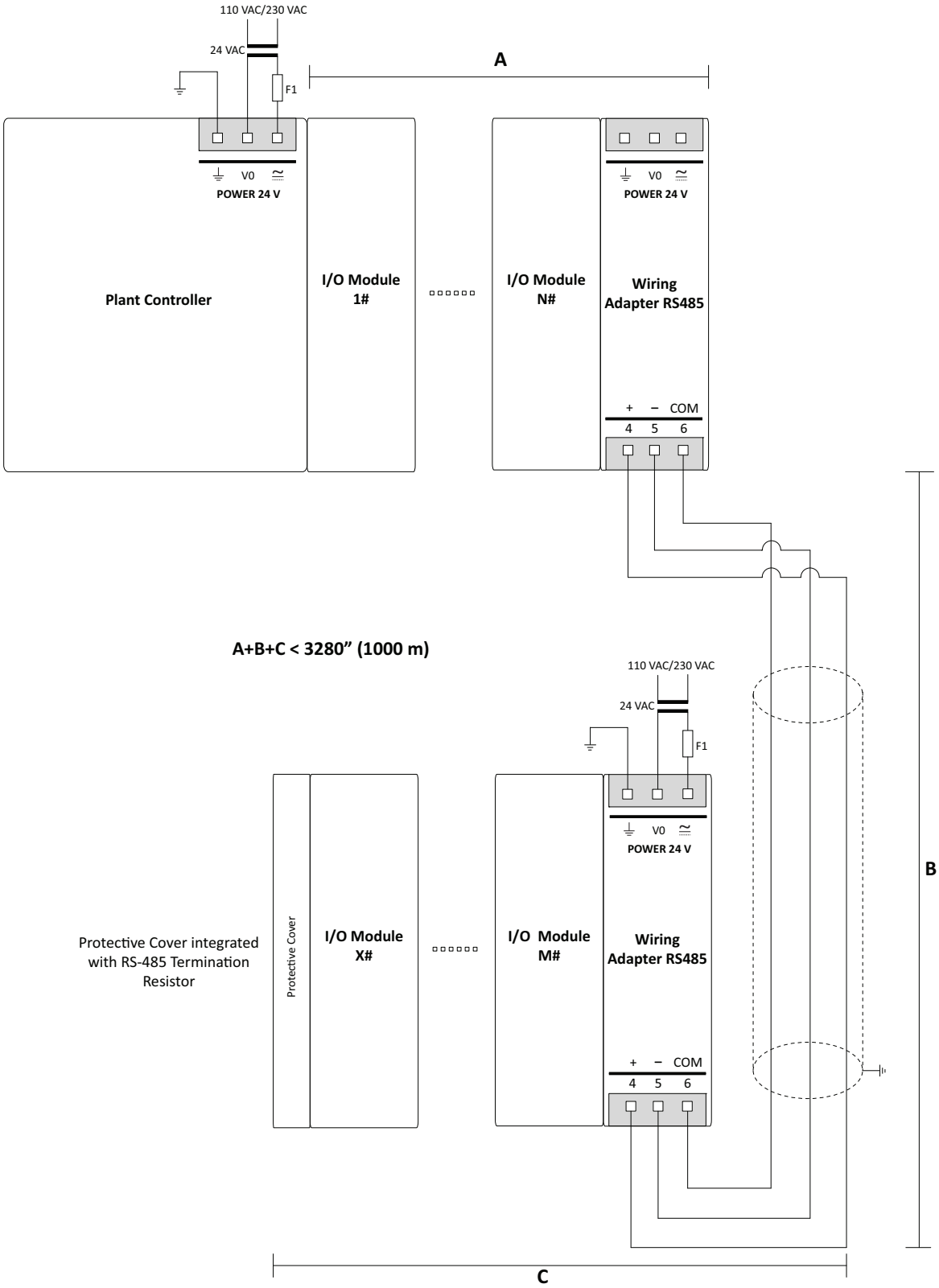

Fig. 4. Power Supply via Separate Transformer

NOTE: For communication cable lengths, transmission speeds, and termination “General Information on the RS485 Standard” section on page 19. For wiring, refer to the “I/O Module Power consumption” section on page 20. For power, refer to the “Power Supply (External)” section on page 19.

Auxiliary Terminal Block Terminals

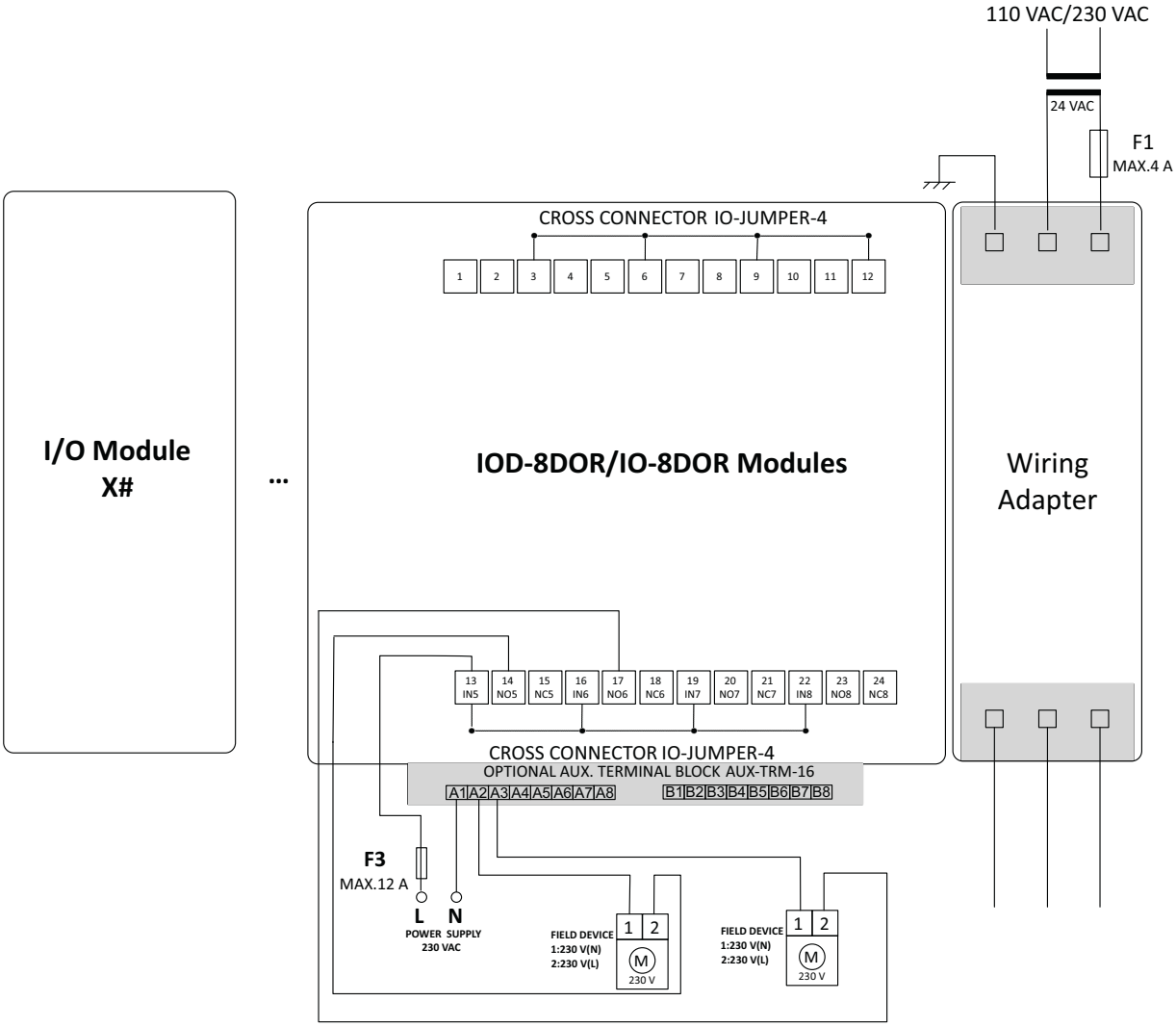

AUX. TERMINAL BLOCK - INTERNAL CIRCUIT

Fig. 5. Auxiliary Terminal Block Terminal Description

CONNECTION EXAMPLES

Universal Input/Output (UIO Module)

NOTE: The below image applies to all UIO modules. However, only 16UIO module is used for illustration purposes.

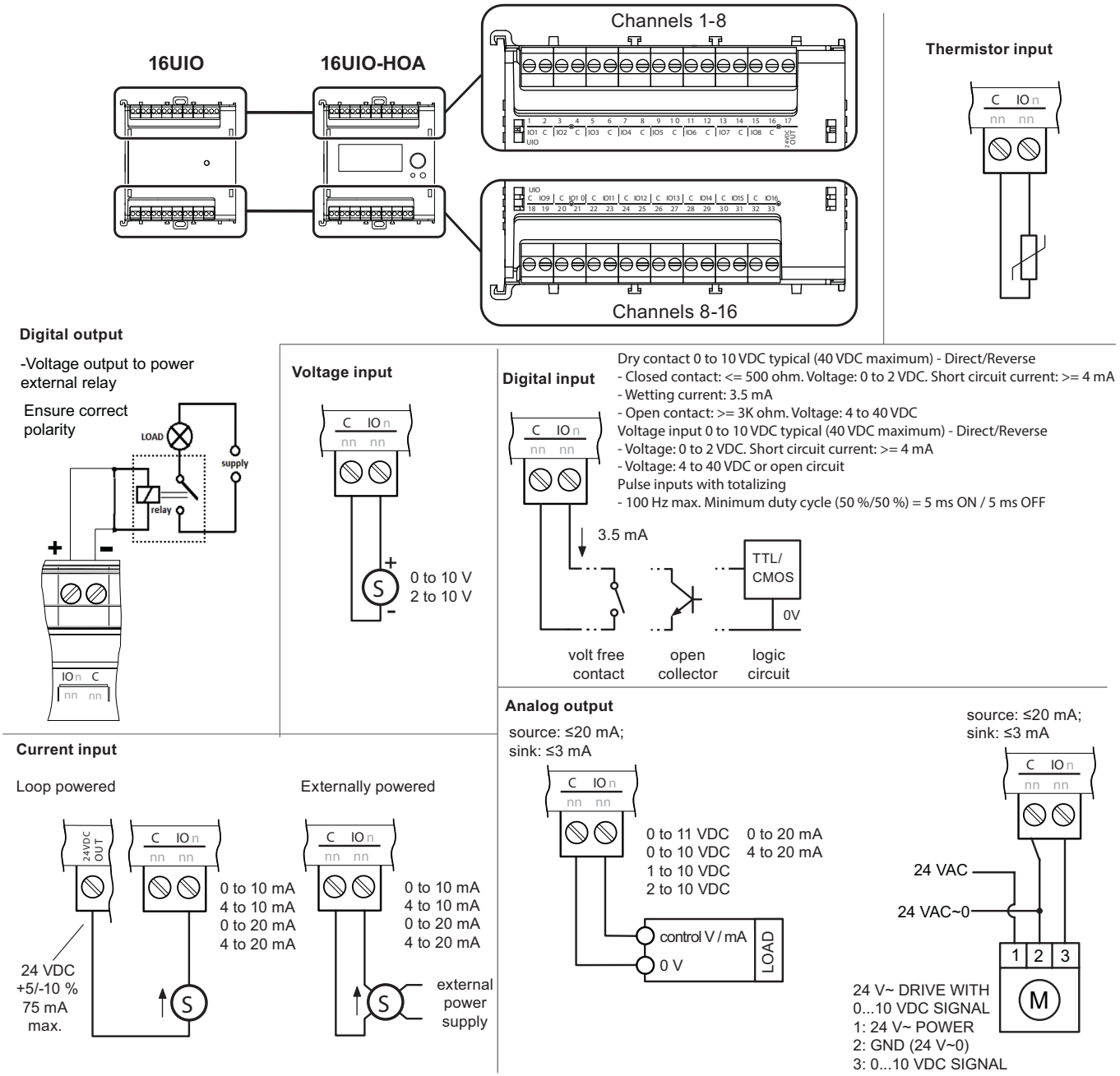

Fig. 6. UIO Module Wiring Connection

NOTE: For communication cable lengths, transmission speeds, and termination, refer to the “General Information on the RS485 Standard” section on page 19. For wiring, refer to the “I/O Module Power consumption” section on page 20. For power, refer to the “Power Supply (External)” section on page 19.

Universal Input (UI Module)

NOTE: The below image applies to all UI modules. However, only 16UI module is used for illustration purposes.

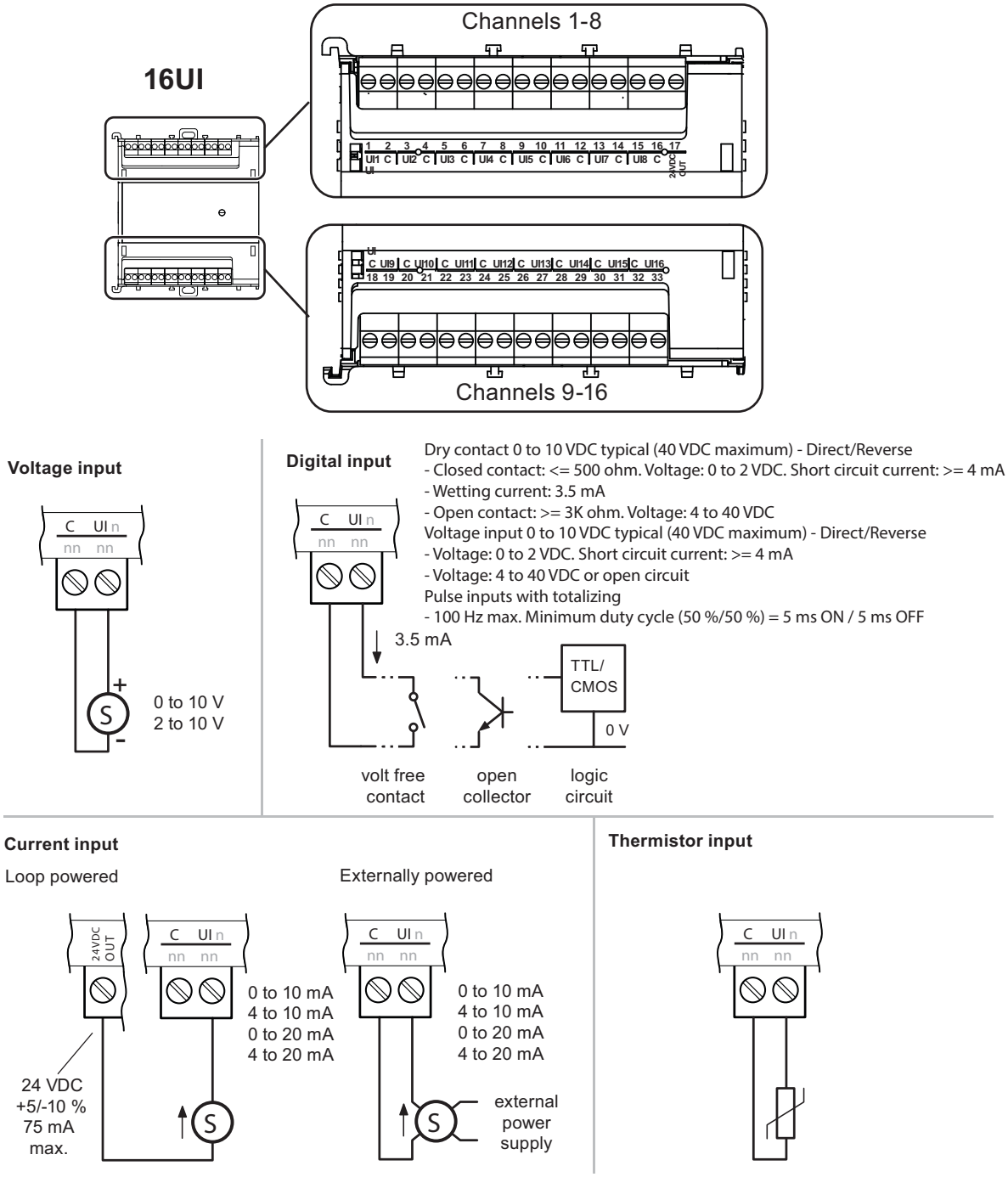

Fig. 7. UI Module Wiring Connection

NOTE: For communication cable lengths, transmission speeds, and termination, refer to the “General Information on the RS485 Standard” section on page 19. For wiring, refer to the “I/O Module Power consumption” section on page 20. For power, refer to the “Power Supply (External)” section on page 19.

Digital Input (DI Module)

NOTE: The below image applies to all DI modules. However, only 16DI module is used for illustration purposes.

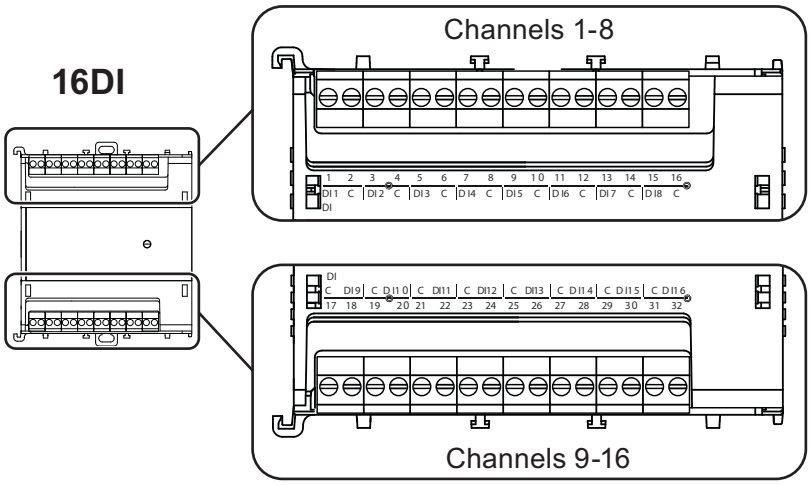

Connecting to volt-free, open collector or logic devices

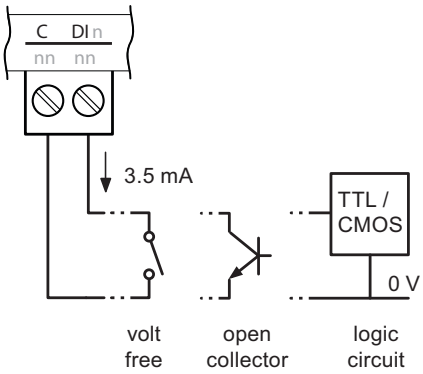

Dry contact 0 to 10 VDC typical (40 VDC maximum) - Direct/Reverse
- Closed contact: <= 500 ohm. Voltage: 0 to 2 VDC. Short circuit current: >= 4 mA
- Wetting current: 3.5 mA
- Open contact: >= 3K ohm. Voltage: 4 to 40 VDC
Voltage input 0 to 10 VDC typical (40 VDC maximum) - Direct/Reverse
- Voltage: 0 to 2 VDC. Short circuit current: >= 4 mA
- Voltage: 4 to 40 VDC or open circuit
Pulse inputs with totalizing
- 100 Hz max. Minimum duty cycle (50 %/50 %) = 5 ms ON / 5 ms OFF

Fig. 8. DI Module Wiring Connection

NOTE: For communication cable lengths, transmission speeds, and termination, refer to the “General Information on the RS485 Standard” section on page 19. For wiring, refer to the “I/O Module Power consumption” section on page 20. For power, refer to the “Power Supply (External)” section on page 19.

Digital Relay Output

NOTE: The below image applies to all DO modules. However, only 8DO module is used for illustration purposes.

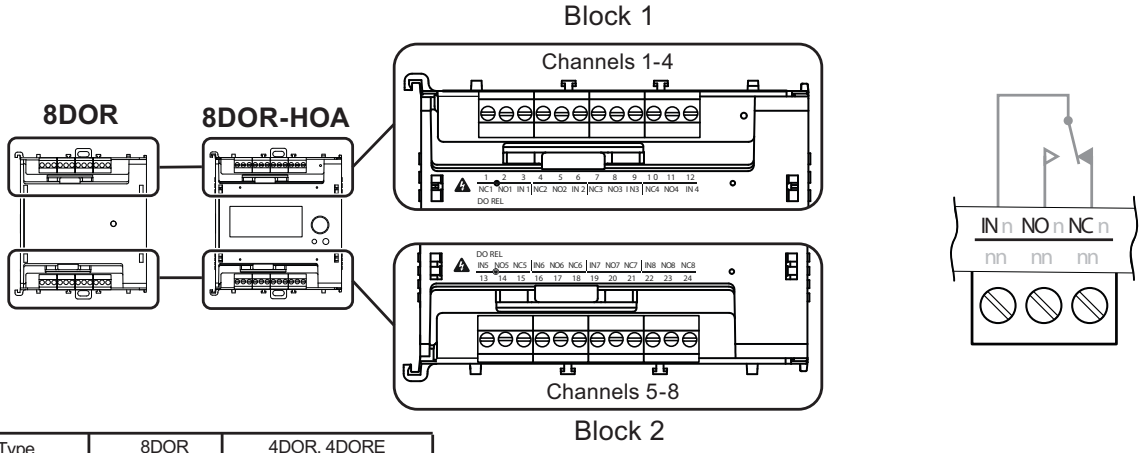

Module Type		8DOR		4DOR, 4DORE	
Channel NUmber		1-4, 6-8	5	1, 2, 4	3
Voltage	VAC	19 to 250		19 to 250	
	VDC	12 to 30		12 to 30 (4DOR) 2 to 30 (4DORE)	
Current	resistive	5 A	10 A	5 A	10 A
	inductive	3 A	6 A	3 A	6 A
	inrush (max)	7.5 A	15 A	7.5 A	15 A
	minimum	10 mA		10 mA (4DOR) 2 Vdc @ 25 mA (4DORE)	

Note: Mains and low voltage must not be mixed within relay block 1 (ch.1-4 on 8DO, ch.1-2 on 4DO) or relay block 2 (ch.5-8 on 8DO, ch.3-4 on 4DO). If both mains and low voltages are to be switched, connect mains to block 1 and low voltage to block 2, or vice versa.

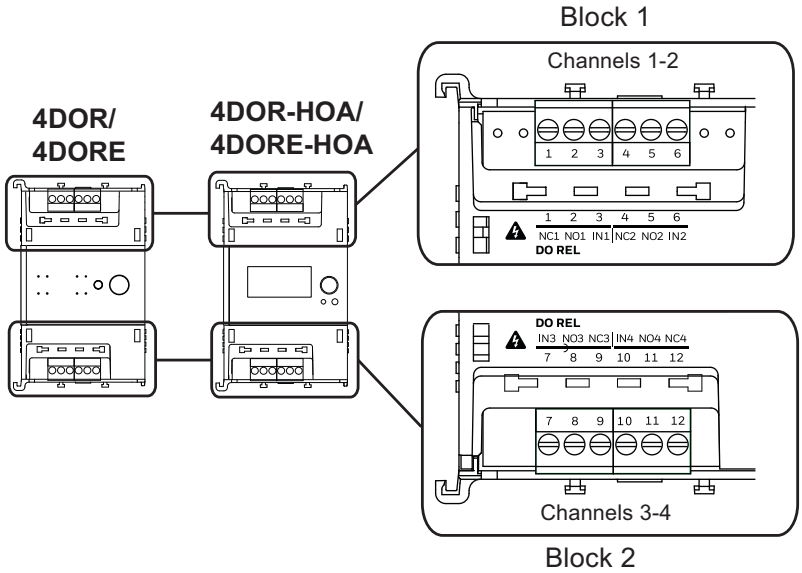

Ensure that external circuits are suitably protected against fault currents that would exceed the ratings for the switching circuits provided in this product.

Example wiring

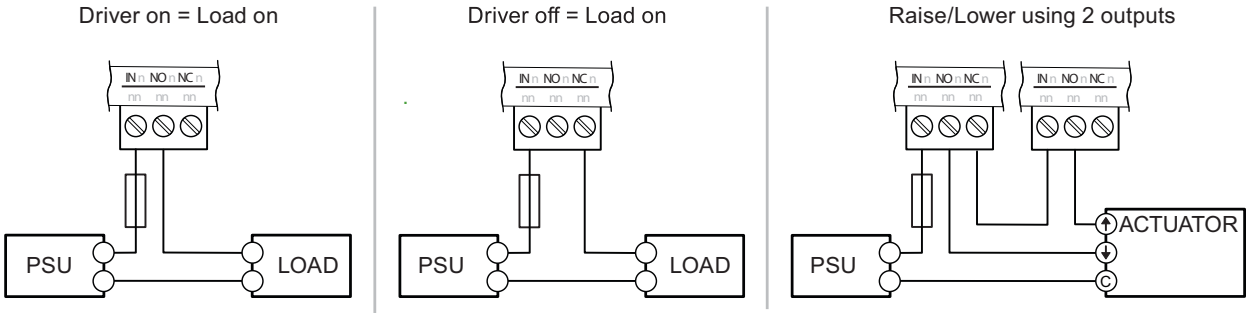

Fig. 9. DO Module Wiring Connection

NOTE: For communication cable lengths, transmission speeds, and termination refer to the “General Information on the RS485 Standard” section on page 12. For wiring, refer to the “Wiring and Set-up” section on page 16. For power, refer to the “Power Supply (External)” section on page 12.

DIP Switches

Setting up the Address of the I/O Module

All I/O modules have 2 two dip-switches. The Protocol DIP switch is for communication and the Addressing DIP switch is to set the I/O module address.

Protocol DIP Switch (4-bit)

0 (Default) - Panel Bus™. 1 to 15 - Reserved. Keep all switches off to set the Panel bus™ protocol.

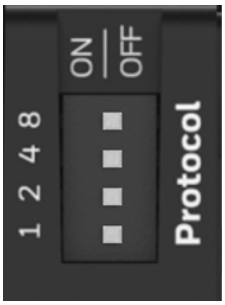

Fig. 10. Protocol DIP Switch

Address DIP Switch (8-bit)

Slide the dip switch on the I/O module to match the address given in the configuration.

Fig. 11. Address DIP Switch

The I/O module supports the address value range from 0 to 255. However, the Panel Bus™ protocol only supports addresses from 0 to 15, and must set between 0 and 15.

Only use DIP switches 1, 2, 4, and 8 to set the Panel Bus™ address. DIP switches 16, 32, 64 and 128 are ignored for Panel Bus™.

- The Niagara controllers support 64 I/O modules in one Panel Bus™ channel.
- The CPO controllers support 16 I/O modules in one Panel Bus™ channel.

Niagara Controllers

For the Niagara controllers, the same address setting can be configured for different I/O module types on a Panel Bus™ channel. For example, an 8DOR without HOA is a different I/O module type than an 8DOR with HOA and therefore can have the same address setting. A different address setting is required for the same I/O module type - for example, 2 of the 8DOR with HOA. If I/O modules of the same type have the same address setting, the RS485 LED on the controller will change to Yellow and the engineering tool will show these modules with an Offline status.

For the Niagara controllers, a maximum of 64 I/O modules are supported on a Panel Bus™ channel. 16 devices of each I/O module type are allowed up to the maximum of 64 devices on a bus. For example, you can have 16 of the 8DOR with HOA, 16 of the 16UIO without HOA, 16 of the 16UIO with HOA, and 16 of the 16DI.

CPO Controllers

For the CPO controllers, the same address setting can be configured for different I/O module types on a Panel Bus™ channel. For example, an 8DOR without HOA is a different I/O module type than an 8DOR with HOA and therefore can have the same address setting. A different address setting is required for the same I/O module type - for example, 2 of the 8DOR with HOA. If I/O modules of the same type have the same address setting, the RS485 LED on the controller will change to Yellow and the engineering tool will show these modules with an Offline status.

For the CPO controllers, a maximum of 16 I/O modules are supported on a Panel Bus™ channel. 16 devices of the same I/O module type are allowed on a Panel Bus™ channel but the maximum is 16 devices on a bus. For example, you can have 16 of the 8DOR with HOA on the Panel Bus™ channel but no more I/O modules can be on that Panel Bus™ channel. A separate RS485 port will need to be configured for Panel Bus™ if more than 16 I/O modules are required.

Table 22. Dip Switch Combination Matrix to set the Panel Bus™ Address

SW1 (1)	SW2 (2)	SW3 (4)	SW4 (8)	SW5 (16)	SW6 (32)	SW7 (64)	SW8 (128)	Value (Hex)	Valid Address (Panel Bus™)
0	0	0	0	0	0	0	0	0x0	0
1	0	0	0	0	0	0	0	0x1	1
0	1	0	0	0	0	0	0	0x2	2
1	1	0	0	0	0	0	0	0x3	3
0	0	1	0	0	0	0	0	0x4	4
1	0	1	0	0	0	0	0	0x5	5
0	1	1	0	0	0	0	0	0x6	6
1	1	1	0	0	0	0	0	0x7	7
0	0	0	1	0	0	0	0	0x8	8
1	0	0	1	0	0	0	0	0x9	9

SW1 (1)	SW2 (2)	SW3 (4)	SW4 (8)	SW5 (16)	SW6 (32)	SW7 (64)	SW8 (128)	Value (Hex)	Valid Address (Panel Bus™)
0	1	0	1	0	0	0	0	0xA	10
1	1	0	1	0	0	0	0	0xB	11
0	0	1	1	0	0	0	0	0xC	12
1	0	1	1	0	0	0	0	0xD	13
0	1	1	1	0	0	0	0	0xE	14
1	1	1	1	0	0	0	0	0xF	15

HOA (HAND-OFF-AUTO)

The HOA (Hand-Off-Auto) feature with back-lit LCD display is available on the following models.

- IOD-16UIO-S-S
- IOD-8DOR-S-S
- IOD-16UIO-S-P
- IOD-8DOR-S-P
- IOD-8UIO-S-S
- IOD-8AO-S-S
- IOD-4UIO-S-S
- IOD-4DOR-S-S
- IOD-4DORE-S-S
- IOD-8UIO-S-P
- IOD-8AO-S-P
- IOD-4UIO-S-P
- IOD-4DOR-S-P
- IOD-4DORE-S-P

The HOA display shows the main screen and the channel screen. The following sections apply to all HOA display models. However, only the 105 mm device display is used for illustration purposes

Main screen

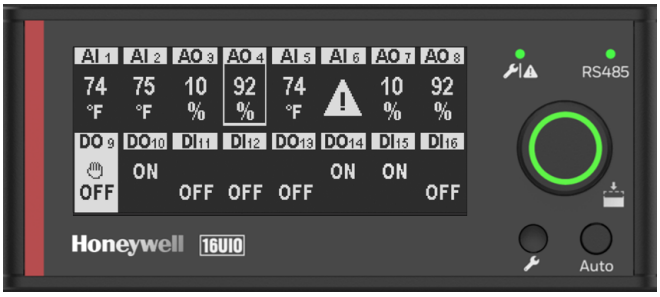

Fig. 12. HOA Display - Main Screen

The above image is example of main screen of 16 UIO I/O module. Typically, a main screen displays the following elements.

- Status of the Input channels - On or Off status for DI channels; Sensor readings for AI channels.
- Status of the Output channels - On or Off for DO channels; 0-100 % for AO channels.
- The type of point (AO, DO, AI, DI).
- Indication if the channel is auto or manually overridden (hand icon) with reverse background.

Each output channel can be manually overridden to On or Off for DO channels and 0 to 100 % for AO channels. The selected channel can also be returned to the Auto mode by pressing the Auto button.

Rotate the dial button to highlight a channel (box outline around the channel, refer to AO 4 on the above screen). After the desired channel is highlighted, a short press of the button dial allows the user to select the desired channel.

Channel screen

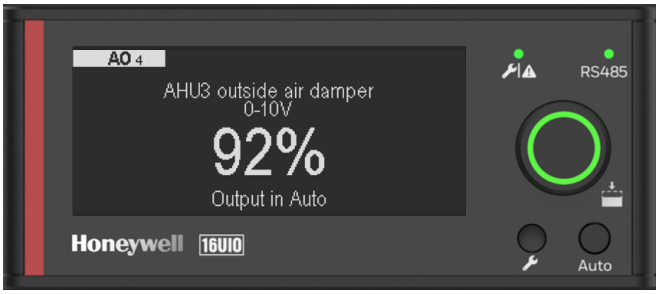

Fig. 13. Channel Screen - Analog Output

Fig. 14. Channel Screen - Digital Output

The above screens are examples of channel screens of AO 4 and DO 9. When a channel is selected, the HOA display shows the status of the channel, the point name, the sensor type (for inputs only) and alarm status. The channel screen allows the user to manually override the channel or set the channel to Auto with a short press of the Auto button.

Dial and Buttons Functions

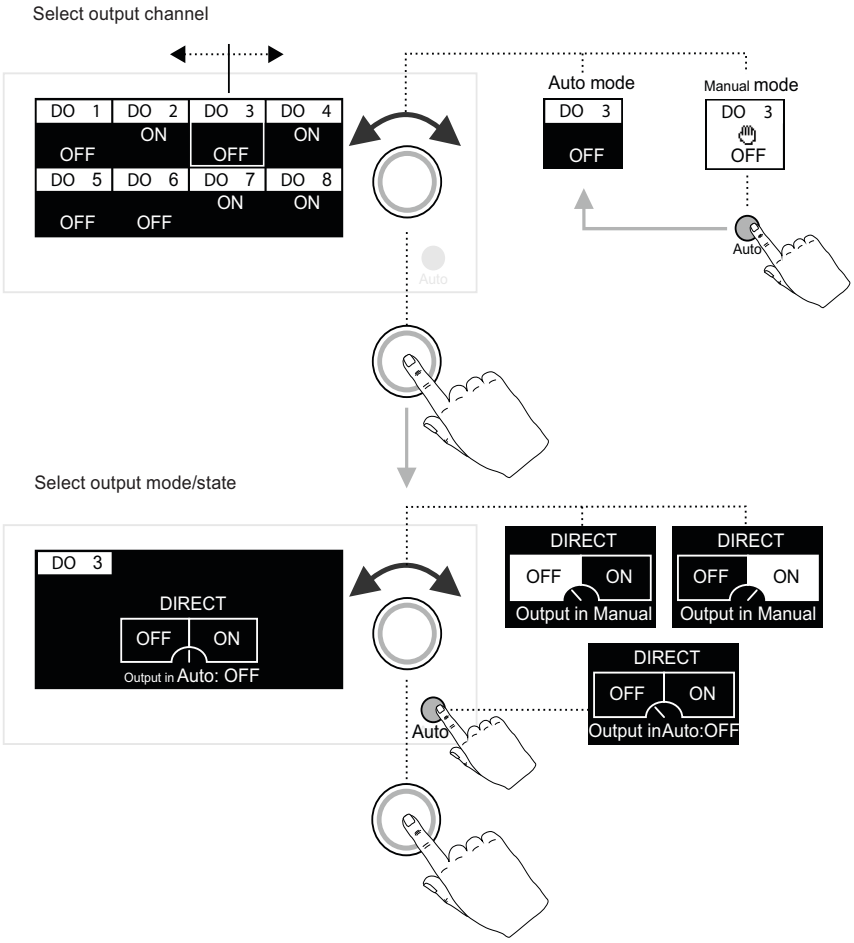

Fig. 15. HOA Display Navigation Gesture

Table 23. Dial & Button Functions

Dial/ Button	Command	Function
Rotating dial	Rotate	**On the main screen**: Toggle between the channels. **On the channel screen**: Settings/values adjustment
	Short press	**On the main screen**: Entering/exiting channel screen. **On the channel screen**: Confirm settings/value.
Service button	Long press (10~15s)	Factory reset. Refer to “Service Button” section on page 10.

Table 23. Dial & Button Functions

Dial/ Button	Command	Function
Auto button	Short press	**Normal mode, on the main /channel screen:** Sets the selected channel parameter to auto mode. **Offline setup mode, on the main/channel screen:** Stops the override.
	Long press (3s)	**Normal mode, on the main screen:** Sets all parameter to auto mode. **Offline setup mode, on the channel screen:** Clears the parameter setup. **Offline setup mode, on the main screen:** Exits offline mode.

Channel Icons Description

Table 24. Channel Icons

	Description
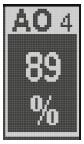	A box around the channel means the channel is selected.
	A hand icon means the channel is in manual mode.
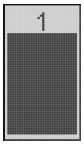	No configuration. Channel is not configured.
	Channel with a warning message.
	Channel with alarm. (Only displays datapoint alarm)
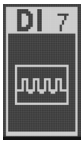	Channel configured for accumulated usage (total pulse contact).
	Channel icon when a custom sensor is used and communication is lost between the controller and I/O module. The Channel Screen will display the Raw Data of the Sensor (i.e. - 1200 ohms). Point Name of the Analog Input will not be displayed. NOTE: When using a sensor from “Table 10. Supported Sensors”, the HOA display continues to show the value of the sensor during a communication loss as the scaling is in the I/O module for these sensors.

Table 24. Channel Icons

	Description
	The unit of measure exceeds the allotted space on the Main Screen. Full unit can be seen on the Channel Screen.
  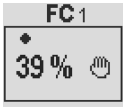	A flashing dot in the respective channel indicates the actuator is currently opening or closing.

NOTES:
- If there is no activity on the channel screen, it automatically navigates back to the main screen
- While adjusting the values, the text keeps blinking till the set value is confirmed.
- Whatever the State text configured in the application will appear as either ON or OFF on the I/O module’s HOA display. For more information, refer to the CPO Studio user guide (en2b0001-ie10).

Setting up the Device

The controller application includes the I/O module configuration. It contains channel configuration, terminal assignment, point properties, safety position of the corresponding devices, floating output, etc.,

For the ComfortPoint Open devices, the controller application is engineered using the CPO Studio engineering tool, and push the configuration to the I/O module via the CPO Online tool. For more information, refer to the CPO Studio user guide (en2b0001-ie10), and the CPO Online tool user guide (en2b0002-ie10).

The controller pushes the application to the I/O modules when address of the I/O modules is set to match the address given in the configuration. To set the DIP switches, refer to the “DIP Switches” section on page 41.

For the Niagara controllers, the application engineering and download to the controller are performed via the Niagara workbench. For more information, refer to the Panel Bus Driver user guide (31-00591-01).

Switching a Channel to Auto Mode and Vice Versa

1. On the main screen, a hand symbol appears on the channel to indicate the channel is in manual mode.

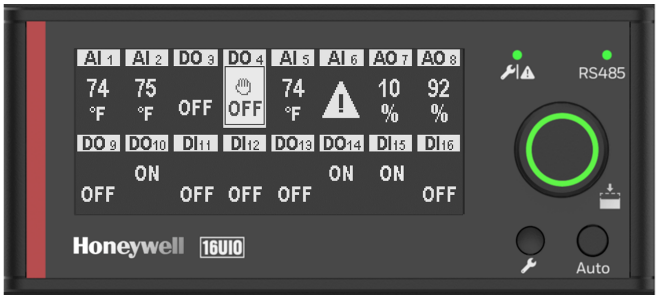

Fig. 16. Main Screen with a Channel in Manual Mode

2. Rotate the dial to navigate to that channel.
   You can return a channel to Auto two different ways.
3. Short press the **Auto** button.
   OR
4. Short press the dial.
   The channel's main screen appears with **Output in Manual** mode.

Fig. 17. Channel Screen in Manual Mode

5. Press the **Auto** button.
   The channel's screen appears with **Output in Auto** mode
6. To switch back to the manual mode, again rotate the dial to the desired value (the value blinks till the confirmation), and short press the dial to confirm the selection.

NOTE: The controller can push the point values only if the new point values matches the existing point values of the I/O module in manual mode. Set the I/O module to Auto mode to get the new point values from the controller.

Resetting all outputs to auto mode

1. On the main screen, long press the Auto button (about 3 seconds).
   The Yes or No confirmation screen appears.

Fig. 18. Channel Screen - Auto Mode Selection

2. Rotate the dial to toggle between **YES** or **NO**.
3. Select an option and press the dial.
   If selected **NO**, the **No outputs were changed** message appears.
   If selected **YES**, the **SET YES** message appears, and all channels will display auto values on the main screen.

Overriding a Floating Control (FC) Channel

Two DO channels can be configured to control a floating actuator. These channels can be side-by-side or non side-by-side configurations.

NOTE: Overriding a Floating Control Channel is only available with the Niagara Advanced Controller (Not the CPO Advanced Controller).

1. On the main screen, Rotate the dial to navigate to the floating control channel (FC).

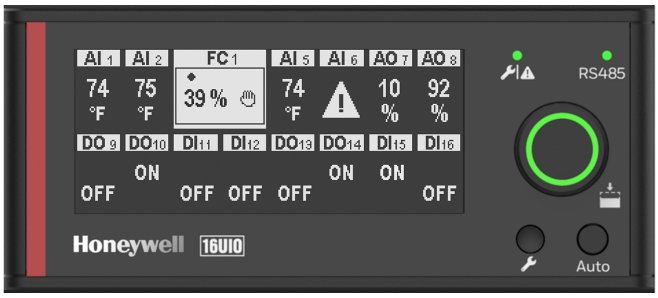

Fig. 19. FC - Side by side Configuration

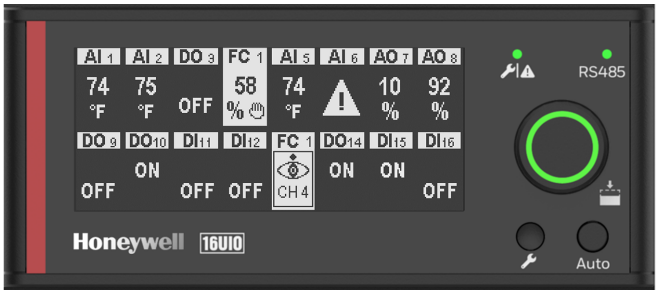

Fig. 20. FC - Non Side by side Configuration

2. Short press the dial.
3. Rotate the dial to set the desired position (0-100 %).
4. Short press the dial to confirm the selection.
   Depending on the current position of the actuator and whether it is opening or closing, a flashing dot will appear on the respective floating control channel

to indicate the actuator is moving. The flashing dot disappears once the actuator reaches the override setting.

5. Short press the **Auto** button to return the FC channel to Auto.

I/O Modules Offline Configuration

For the I/O modules with HOA display, in absence of the online configuration from the controller, the channels of the I/O module can be configured offline in order to drive outputs for pre-commissioning. The I/O module only shows the following screens when there is no online configuration from the controller.

Language Selection

1. Connect the I/O module to power.
   All LEDs turn on, language selection page appears.

Fig. 21. Language Page

2. Rotate the dial to select a language and short press the dial to confirm the selection.
   The main screen appears with the following message.

Fig. 22. Main Screen with No Configuration

3. Press the dial to start the channel configuration.
   Main LED breaths green.

Manual Channel Configuration

The relevant main screen of the I/O device with channels with no values appears. For example, IOD-16UIO-S-S, HOA display is given below.

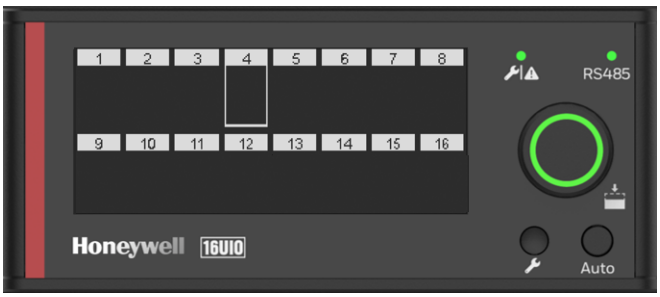

Fig. 23. Main Screen with Channels Not Configured

4. Rotate the dial, then press the dial.
   The channel screen appears.

Fig. 24. Channel Type Configuration

5. Rotate the dial to choose the channel type (N/A, DO, AO 0-11 V, AO 0-20 mA).
6. Press the dial to confirm the channel type selection.
   The output value parameter of the selected channel appears.

NOTE: After channel type is configured (for example AO4), use that terminal for the AO assignment. If N/A is selected, the terminal cannot be used.

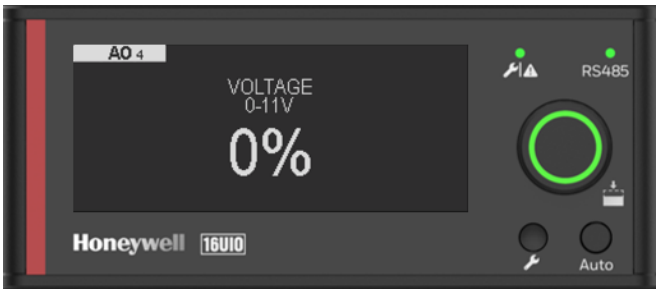

Fig. 25. Setting up Channel's Value

7. Rotate the dial to set an output value for the channel type and press the dial to confirm the selection.
8. To reset the channel type and output selection, rotate the dial to the desired channel and short press the Auto button.
   This clears the channel's parameter. Once the channel output is configured, the channel screen returns to the main screen.

Safety Position Configuration

In the event of a communication loss between the controller and the I/O module, the I/O module reverts to the safety position that is setup in the tool. This includes options to follow the last state or a configurable value after a specified period of time.

To configure safety position in the CPO Studio tool, refer to the CPO Studio user guide (en2b0001-ie10).

To configure safety position for the Niagara controller, refer to the Panel Bus Driver user guide (31-00591-01).

Floating Control Synchronization

In order to regularly update the real actuator position with the calculated position and thus ensure that the actuator definitely reaches its end position, a synchronization process is performed by the UIO I/O module. During the synchronization process, the UIO I/O module will continue running for the configured runtime once it reaches the calculated end position.

This updating (synchronization) is performed:

- If the calculated position of the actuator < lower synchronization threshold (2 %) = synchronization towards 0 %
- If the calculated position of the actuator > upper synchronization threshold (98 %) = synchronization towards 100 %
- Following any power-up or any reset

MANAGING FIRMWARE/CONFIGURATION OF I/O MODULES

For Niagara Advanced Controller

The controller's firmware/configuration file includes the firmware/configuration for the I/O modules. Thus, whenever the controller's firmware/configuration is updated, the firmware/configuration of the I/O modules is automatically updated, if connected.

For CPO Advanced Controller

I/O module firmware is downloaded to the controller separately from the CPO Studio tool. After the download, the CPO Advanced Controller will check if the I/O module firmware version is different compared to the current firmware. If the two firmware versions are different, the CPO Advanced Controller will automatically download the new firmware/configuration to the I/O module.

Rules for Configuration Update

If the I/O module is set to the same address of the original device, the controller will download the configuration file and the module will start operating.

If the I/O Module has one or more channels in Manual (Hand) and the configuration of the channels is the same as the previous configuration, then controller will continue with the download. The Manual (Hand) position is maintained.

If the I/O Module has one or more channels in Manual (Hand) and the configuration of any channel is different than the previous configuration, the controller will not download the configuration and stops the read/write until all channels of the I/O module are set back to Auto.

NOTE: If multiple I/O modules are connected in the network, then the firmware upgrade is performed in parallel. If any I/O module is misconfigured or not configured in the network, then the upgrade will not be performed. However, the RS485 LED of that I/O module will turn green due to a common broadcast.

For more information on firmware/configuration file download/update, refer to the CPO Online tool user guide (en2b0002-ie10) or Niagara Supervisor engineering guide (31-00591-01).

LED AND HOA DISPLAY INDICATIONS

All LED and HOA Display Indications are common to all I/O modules.

NOTE: Logical and Physical are configurable options in the Optimizer Workbench and Comfort & Energy Workbench tools. CPO Studio tool does not have this configurable option. The CPO Studio Tool uses Logical for DI/DO and Physical for AI/AO which is the same as the XF8xx/XFR8xx Panel Bus IO modules.

Table 25. LED and HOA Display Indications

Channel Type	Characteristics	Logical/Physical	Value on the tools	Actual physical value	I/O LED Indication	HOA Display Indication
DO	DO (Direct)	Logical (Application)	State(Off)	Contact is open	Off	Direct Off
			State(On)	Contact is closed	On	Direct On
	DO (Reverse)		State(Off)	Contact is closed	Off	Reverse Off
			State(On)	Contact is open	On	Reverse On
	DO (Direct)	Physical	State(Off)	Contact is open	Off	Direct Off
			State(On)	Contact is closed	On	Direct On
	DO (Reverse)		State(Off)	Contact is closed	On	Reverse On
			State(On)	Contact is open	Off	Reverse Off
DI	DI (Normally Open)	Logical (Application)	State(Off)	Contact is open	Off	Direct Off
			State(On)	Contact is closed	On	Direct On
	DI (Normally Closed)		State(Off)	Contact is closed	Off	Reverse Off
			State(On)	Contact is open	On	Reverse On
	DI (Normally Open)	Physical	State(Off)	Contact is open	Off	Direct Off
			State(On)	Contact is closed	On	Direct On
	DI (Normally Closed)		State(Off)	Contact is closed	On	Reverse On
			State(On)	Contact is open	Off	Reverse Off

Table 25. LED and HOA Display Indications

Channel Type	Characteristics	Logical/Physical	Value on the tools	Actual physical value	I/O LED Indication	HOA Display Indication
AO	0-10 V (Direct)	Logical (Application)	0 %	0 V	Off	0-10 V 0 %
			10 %	1 V	On	0-10 V 10 %
			100 %	10 V	On	0-10 V 100 %
	0-10 V (Reverse)		0 %	10 V	Off	10-0 V 0 %
			10 %	9 V	On	10-0 V 10 %
			100 %	0 V	On	10-0 V 100 %
	0-10 V (Direct)	Physical	0 %	0 V	Off	0-10 V 0 %
			10 %	1 V	On	0-10 V 10 %
			100 %	10 V	On	0-10 V 100 %
	0-10 V (Reverse)		0 %	10 V	On	10-0 V 0 %
			10 %	9 V	On	10-0 V 10 %
			100 %	0 V	Off	10-0 V 100 %
AI	0-10 V (Direct)	Logical (Application)	0 %	0 V	Off	0-10 V 0 %
			10 %	1 V	On	0-10 V 10 %
			100 %	10 V	On	0-10 V 100 %
	0-10 V (Reverse)		0 %	10 V	Off	10-0 V 0 %
			10 %	9 V	On	10-0 V 10 %
			100 %	0 V	On	10-0 V 100 %
	0-10 V (Direct)	Physical	0 %	0 V	Off	0-10 V 0 %
			10 %	1 V	On	0-10 V 10 %
			100 %	10 V	On	0-10 V 100 %
	0-10 V (Reverse)		0 %	10 V	On	10-0 V 0 %
			10 %	9 V	On	10-0 V 10 %
			100 %	0 V	Off	10-0 V 100 %

Main LED (On Dial)

Table 26. Main LED

LED behavior	Visual	Description
Off		Device is powered Off.
Green-Yellow-Red cycling, Alternate Green, Yellow, Red in every 1.5 Second (0.2S on / 0.3S off)		Factory default. No application loaded / No configuration.
Green-Solid		Power On, working properly, receiving data from the controller and connection is good. Or High or Low Alarm at an IO channel
Green - Breathing		Out of box. Offline configuration mode.
Green - Blink every 0.2 s		Application/firmware download or configuration in progress.
Yellow - Solid		Communication loss/cannot parse package/address error/OTA packet loss in the Panel bus™. Or Input failure (channel input failure). Or A channel has a READ alarm (i.e. out of range). Or IO database points not setup (communication to IO is working).
Red - Solid		Hardfault/Fatal error/Assert error.

Service LED

Table 27. Service LED

LED behavior	Visual	Description
Green-Solid		Solid green when press and holding the service button. Refer to “Service Button” section on page 10 to reset the I/O module.

RS485 LED

Table 28. RS485 Communication LED

LED behavior	Visual	Description
Green - Solid		Power On, working properly, receiving data from the controller and connection is good.
Yellow - Solid		RS485 communication frame error.
Red-Solid		Communication failed.

Channel LEDs

Universal Input Channel - Configured as AI

Table 29. UI Channel LED

LED behavior	Visual	Description
Off		Not configured. For current and voltage input, if the physical input value equals 0, LED brightness intensity equals 0 or Off.
Green-Solid		Working properly.
Red-Solid		Alarm; Out-of-range; sensor break; sensor shorted; High / Low or READ condition.

Universal Input / Output Channel - Configured as AI or AO

Table 30. UIO Channel LED

LED behavior	Visual	Description
Off		Not configured. For current and voltage input/output, if the physical input/output value equals 0, LED brightness intensity equals 0 or Off.
Green-Solid		Working properly.
Red-Solid		Alarm; Out-of-range; High / Low or READ condition. Not applicable for AO.

Digital Input Channel - UIO, UI and DI I/O Modules

Table 31. DI Channel LED

LED behavior	Visual	Description
Off		Not configured. Off = Inactive/Stopped
Green-Solid		On: Active Running. Pulse: solid green for high level, off for low level. If frequency is greater than 10 Hz, then it will be solid green.
Red-Solid		On = Alarm; High / Low or READ condition

Digital Input Channel - UIO, UI and DI I/O Modules

Table 32. Digital Input & UIO configured as DI

	Normal Polarity		Reverse Polarity		Description
	Open	**Closed**	**Open**	**Closed**	
LED behavior	Off	Solid-Green	Solid-Green	Off	Status
	Off	Solid-Red	Solid-Red	Off	Alarms
	Off	Solid-Yellow	Solid-Yellow	Off	Status or warnings
	Solid-Green	Solid-Red	Solid-Red	Solid-Green	Alarms

Digital Output Channel

Table 33. DO Channel LED

LED behavior	Visual	Description
Off		OFF = Inactive/Stopped/OFF or not configured.
Green-Solid		On = Active/Running/ON For Floating Control using Digital Outputs, LED is On when the actuator is moving and the LED is Off when the actuator is not moving.

APPENDIX: EARTH GROUNDING

I/O Module and SELV

In order to avoid distribution of noise or earth ground potential differences over networks or other connections, the I/O module is designed to comply with SELV (Safety Extra Low Voltage).

Furthermore, SELV offers the greatest possible safety against electrical impact.

To support SELV, all Honeywell external (CRT series) or internal transformers comply with standard EN60742. Earth grounding is therefore not recommended.

I/O Module and EN60204-1

However, if compliance with the standard EN60204-1 is required, note the following:

General Information about EN60204-1

EN60204-1 defines electrical safety for a complete application/machine including I/O modules, sensors, actuators and any connected/controlled electrical device.

EN60204-1 requires I/O modules to be powered by PELV (Protective Extra-Low Voltage) and earth grounding of the secondary side of the used transformers or earth grounding of the system ground.

Earth grounding is prescribed to prevent the unexpected start-up of connected rotating/moving machines due to an insulation fault and double earth grounding somewhere in the plant.

The use of an earth leakage monitor is also possible to fulfill PELV if earth grounding is prohibited.

When is EN60204-1 Applicable to I/O module?

SAFETY AGAINST ELECTRICAL IMPACT
EN60204-1 is not mandatory; this is because electrical safety is provided by the use of SELV and transformers according to standard EN60742.

SAFETY AGAINST UNEXPECTED START-UP OF ROTATING/MOVING MACHINES
If the application/plant does not contain machines that can be harmful to the operator due to an unexpected start-up, the standard EN60204-1 is not applicable. If such machines are encountered, then EN60204-1 must be followed. Grounding is required.

Functional EMC Grounding

- Use a cable as short as possible for grounding: min 1.5 mm^2 (16 AWG).
- For connection details, refer to the following example.

EXAMPLE
Connecting a single transformer with multiple I/O modules earth-grounded as per EN60204-1.

- Connect earth ground to FGND of the I/O module.

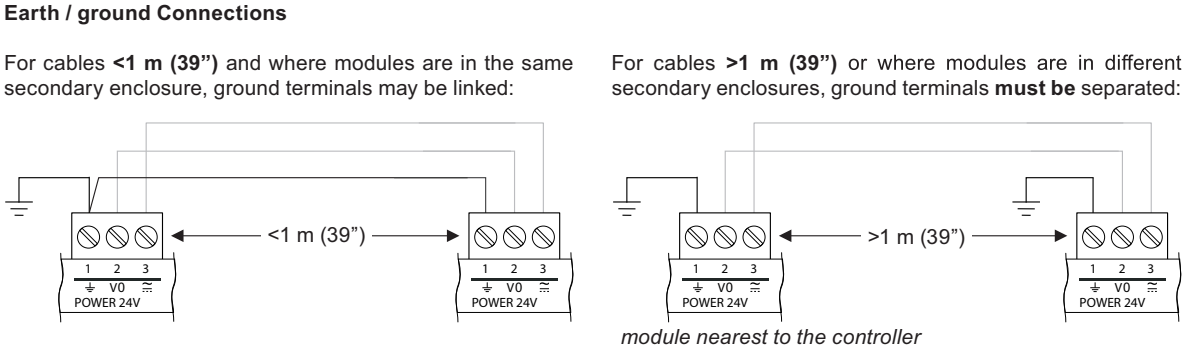

Fig. 26. Connecting and earth grounding multiple I/O module (single transformer)

NOTES:

- Use a noise-free earth ground inside the cabinet.
- Use one star-point to split power for I/O modules and field devices.
- If the transformer is used for several I/O modules, each I/O module ground has to be wired separately to the star point.
- If a field device that prohibits earth grounding is connected to the system ground, an isolation monitoring device must be used instead of earth grounding.
- If the field device transformer is physically far away from the I/O module, earth grounding must still be performed for the I/O module.

Accessories Part Numbers

These accessories are available by separate order.

Table 34. Accessories Part Numbers

	Part Number	Description
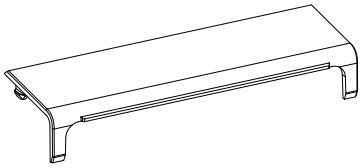	TCVR-105-10	Terminal covers for 105 mm (4.13") size I/O modules - pack of 10. Each I/O module includes 2 terminal covers.
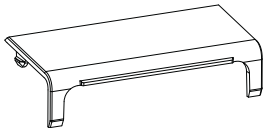	TCVR-70-10	Terminal covers for 70 mm (2.76") size I/O modules - pack of 10. Each I/O module includes 2 terminal covers.
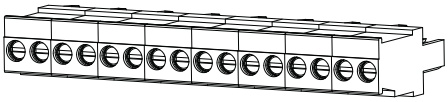	SCRW-TB-2-PUR-50	Screw terminals - 2 way - purple - pack of 50
	SCRW-TB-3-PUR-50	Screw terminals - 3 way - purple - pack of 50
	SCRW-TB-2-BLU-50	Screw terminals - 2 way - blue - pack of 50
	SCRW-TB-3-BLU-50	Screw terminals - 3 way - blue - pack of 50
	SCRW-TB-2-YEL-50	Screw terminals - 2 way - yellow - pack of 50
	SCRW-TB-R-3-ORN-50	Screw terminals for line voltage relays - 3 way - orange - pack of 50
	SCRW-TB-3-BLK-50	Screw terminals - 3 way - black - pack of 50
	SCRW-TB-3-GRY-50	Screw terminals - 3 way - grey - pack of 50
	SCRW-TB-2-BLK-50	Screw terminals - 2 way - black - pack of 50
	SCRW-TB-2-GRN-50	Screw terminals - 2 way - green - pack of 50
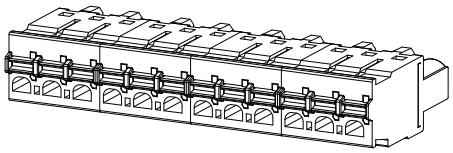	PUSH-TB-2-PUR-50	Push terminals - 2 way - purple - pack of 50
	PUSH-TB-3-PUR-50	Push terminals - 3 way - purple - pack of 50
	PUSH-TB-2-BLU-50	Push terminals - 2 way - blue - pack of 50
	PUSH-TB-3-BLU-50	Push terminals - 3 way - blue - pack of 50
	PUSH-TB-2-YEL-50	Push terminals - 2 way - yellow - pack of 50
	PUSH-TB-R-3-ORN-50	Push terminals for line voltage relays - 3 way - orange - pack of 50
	PUSH-TB-3-BLK-50	Push terminals - 3 way - black - pack of 50
	PUSH-TB-3-GRY-50	Push terminals - 3 way - grey - pack of 50
	PUSH-TB-2-BLK-50	Push terminals - 2 way - black - pack of 50
	PUSH-TB-2-GRN-50	Push terminals - 2 way - green - pack of 50

Table 34. Accessories Part Numbers

	Part Number	Description
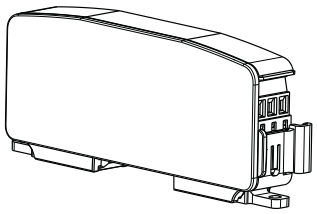	IO-ADPT-S-2	I/O Wiring Adapters - pack of 2 IO-ADPT-S. Provides wiring connections for power and communications which are used to extend I/O modules to another DIN rail or to remotely locate the I/O modules.
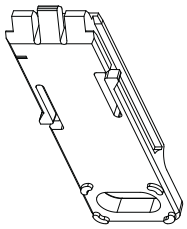	DIN-CLIP-10	DIN rail clip - pack of 10
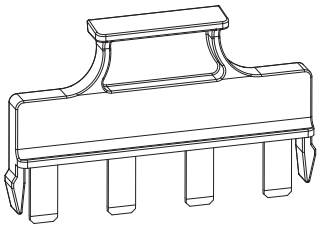	IO-JUMPER-4-10	4 pin relay output jumper - pack of 10. Connects 4 relay commons. Each DO relay module includes 2 jumpers. Compatible with 105 mm (4.13”) I/O module sizes (8DOR)
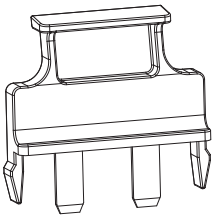	IO-JUMPER-2-10	2 pin relay output jumper - pack of 10. Connects 2 relay commons. Each DO relay module includes 2 jumpers. Compatible with 70 mm (2.76”) I/O module sizes (4DOR and 4DORE)
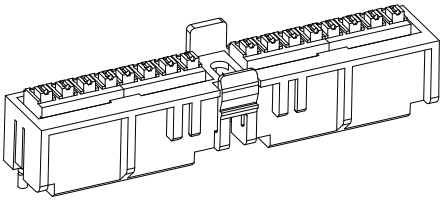	AUX-TRM-16-10	Auxiliary terminal block - 16 way - pack of 10 AUX-TRM-16. Each auxiliary terminal block has two groups of eight internally connected push in terminals for distributing signals/power. Compatible with 105 mm (4.13”) I/O module sizes (16UIO, 16UI, 16DI and 8DOR).
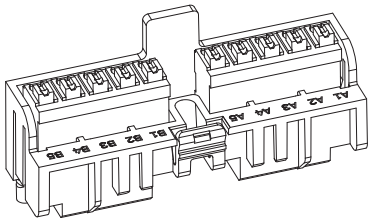	AUX-TRM-10-10	Auxiliary terminal block - 10 way - pack of 10 AUX-TRM-10. Each auxiliary terminal block has two groups of five internally connected push in terminals for distributing signals/power. Compatible with 70 mm (2.76”) I/O module sizes (8UIO, 4UIO, 8AO, 8DI, 4DOR and 4DORE).

Table 34. Accessories Part Numbers

	Part Number	Description
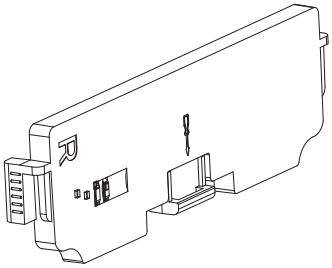	ENDCOVER-10	Protective end covers to cover the power and comms touch flake connections - pack of 10. The protective end cover is attached to the Advanced Plant Controller when used without an I/O module or the protective end cover is attached to the last I/O module in the panel. The protective end cover has a built in end of line resistor to terminate the RS485 bus. Each Advanced Plant Controller includes one protective end cover. Only one protective cover is needed per system. This pack is intended for replacement if the original cover is lost.

TECHNICAL LITERATURE

Table 35. Technical Literature

Title	Product Literature Number	Contents
ComfortPoint™ Open PC500 Plant Controller - Data Sheet	en0b0310-ie10	Product data including technical specification, ordering information, and product description.
ComfortPoint™ Open PC500 Plant Controller - Mounting Instructions	mu1b0312-ie10	Describes the mechanical mounting of the device.
ComfortPoint™ Open PC500 Plant Controller - Installation Instructions	en1b0311-ie10	Describes the electrical, wiring, and commissioning information.
ComfortPoint™ Open PC600 Plant Controller - Data Sheet	en0b0313-ie10	Product data including technical specification, ordering information, and product description.
ComfortPoint™ Open PC600 Plant Controller - Mounting Guide	mu1b0315-ie10	Describes the mechanical mounting of the device.
ComfortPoint™ Open PC600 Plant Controller - Installation Instructions	en1b0314-ie10	Describes the electrical, wiring, and commissioning information.
ComfortPoint™ ComfortMan – User Guide	en2b0003-ie10	Describes managing the firmware of the controller such as collecting, analyzing diagnostic data, and so on.
ComfortPoint™ Open Studio tool - User Guide	en2b0001-ie10	Describes creating logical controllers, plants, data points, control logic, plant systems, facilities for the controller applications and download the configuration setting to controllers.
ComfortPoint™ Open Online tool - User Guide	en2b0002-ie10	Describes all commissioning activities such as performing uploading and downloading application & firmware, monitoring datapoints, licensing PDA devices, and VAV balancing configuration.
Niagara Advanced Plant Controller - Datasheet	31-00583	Product data including technical specification, ordering information, and product description.

Table 35. Technical Literature (Continued)

Title	Product Literature Number	Contents
Niagara Advanced Plant Controller - Mounting Instructions	31-00553	Describes the mechanical mounting of the device.
Niagara Advanced Plant Controller - Installation Instructions	31-00584	Describes the electrical, wiring, and commissioning information.
PANELBUS DRIVER 4.10.xx - Guide	31-00591	Describes creating logical controllers, plants, data points, control logic, plant systems, facilities for the controller applications and download the configuration setting to controllers.

By using this Honeywell literature, you agree that Honeywell will have no liability for any damages arising out of your use or modification to, the literature. You will defend and indemnify Honeywell, its affiliates and subsidiaries, from and against any liability, cost, or damages, including attorneys' fees, arising out of, or resulting from, any modification to the literature by you.

Honeywell | Building Automation

715 Peachtree Street, N.E.,

Atlanta, Georgia, 30308,

United States.

https://buildings.honeywell.com

® U.S. Registered Trademark
© 2024 Honeywell International Inc.
31-00589-02 | Rev.07-24