NOTIFIER®
by Honeywell

Smoke and HVAC Control Station
SCS Series
Operation and Installation Manual

Document 15712 Rev: M
08/12/19 ECN: 18-0305

Fire Alarm & Emergency Communication System Limitations

While a life safety system may lower insurance rates, it is not a substitute for life and property insurance!

An automatic fire alarm system—typically made up of smoke detectors, heat detectors, manual pull stations, audible warning devices, and a fire alarm control panel (FACP) with remote notification capability—can provide early warning of a developing fire. Such a system, however, does not assure protection against property damage or loss of life resulting from a fire.

An emergency communication system—typically made up of an automatic fire alarm system (as described above) and a life safety communication system that may include an autonomous control unit (ACU), local operating console (LOC), voice communication, and other various interoperable communication methods—can broadcast a mass notification message. Such a system, however, does not assure protection against property damage or loss of life resulting from a fire or life safety event.

The Manufacturer recommends that smoke and/or heat detectors be located throughout a protected premises following the recommendations of the current edition of the National Fire Protection Association Standard 72 (NFPA 72), manufacturer's recommendations, State and local codes, and the recommendations contained in the Guide for Proper Use of System Smoke Detectors, which is made available at no charge to all installing dealers. This document can be found at http://www.systemsensor.com/appguides/. A study by the Federal Emergency Management Agency (an agency of the United States government) indicated that smoke detectors may not go off in as many as 35% of all fires. While fire alarm systems are designed to provide early warning against fire, they do not guarantee warning or protection against fire. A fire alarm system may not provide timely or adequate warning, or simply may not function, for a variety of reasons:

Smoke detectors may not sense fire where smoke cannot reach the detectors such as in chimneys, in or behind walls, on roofs, or on the other side of closed doors. Smoke detectors also may not sense a fire on another level or floor of a building. A second-floor detector, for example, may not sense a first-floor or basement fire.

Particles of combustion or "smoke" from a developing fire may not reach the sensing chambers of smoke detectors because:

- Barriers such as closed or partially closed doors, walls, chimneys, even wet or humid areas may inhibit particle or smoke flow.
- Smoke particles may become "cold," stratify, and not reach the ceiling or upper walls where detectors are located.
- Smoke particles may be blown away from detectors by air outlets, such as air conditioning vents.
- Smoke particles may be drawn into air returns before reaching the detector.

The amount of "smoke" present may be insufficient to alarm smoke detectors. Smoke detectors are designed to alarm at various levels of smoke density. If such density levels are not created by a developing fire at the location of detectors, the detectors will not go into alarm.

Smoke detectors, even when working properly, have sensing limitations. Detectors that have photoelectronic sensing chambers tend to detect smoldering fires better than flaming fires, which have little visible smoke. Detectors that have ionizing-type sensing chambers tend to detect fast-flaming fires better than smoldering fires. Because fires develop in different ways and are often unpredictable in their growth, neither type of detector is necessarily best and a given type of detector may not provide adequate warning of a fire.

Smoke detectors cannot be expected to provide adequate warning of fires caused by arson, children playing with matches (especially in bedrooms), smoking in bed, and violent explosions (caused by escaping gas, improper storage of flammable materials, etc.).

Heat detectors do not sense particles of combustion and alarm only when heat on their sensors increases at a predetermined rate or reaches a predetermined level. Rate-of-rise heat detectors may be subject to reduced sensitivity over time. For this reason, the rate-of-rise feature of each detector should be tested at least once per year by a qualified fire protection specialist. Heat detectors are designed to protect property, not life.

IMPORTANT! Smoke detectors must be installed in the same room as the control panel and in rooms used by the system for the connection of alarm transmission wiring, communications, signaling, and/or power. If detectors are not so located, a developing fire may damage the alarm system, compromising its ability to report a fire.

Audible warning devices such as bells, horns, strobes, speakers and displays may not alert people if these devices are located on the other side of closed or partly open doors or are located on another floor of a building. Any warning device may fail to alert people with a disability or those who have recently consumed drugs, alcohol, or medication. Please note that:

- An emergency communication system may take priority over a fire alarm system in the event of a life safety emergency.
- Voice messaging systems must be designed to meet intelligibility requirements as defined by NFPA, local codes, and Authorities Having Jurisdiction (AHJ).
- Language and instructional requirements must be clearly disseminated on any local displays.
- Strobes can, under certain circumstances, cause seizures in people with conditions such as epilepsy.
- Studies have shown that certain people, even when they hear a fire alarm signal, do not respond to or comprehend the meaning of the signal. Audible devices, such as horns and bells, can have different tonal patterns and frequencies. It is the property owner's responsibility to conduct fire drills and other training exercises to make people aware of fire alarm signals and instruct them on the proper reaction to alarm signals.
- In rare instances, the sounding of a warning device can cause temporary or permanent hearing loss.

A life safety system will not operate without any electrical power. If AC power fails, the system will operate from standby batteries only for a specified time and only if the batteries have been properly maintained and replaced regularly.

Equipment used in the system may not be technically compatible with the control panel. It is essential to use only equipment listed for service with your control panel.

Telephone lines needed to transmit alarm signals from a premises to a central monitoring station may be out of service or temporarily disabled. For added protection against telephone line failure, backup radio transmission systems are recommended.

The most common cause of life safety system malfunction is inadequate maintenance. To keep the entire life safety system in excellent working order, ongoing maintenance is required per the manufacturer's recommendations, and UL and NFPA standards. At a minimum, the requirements of NFPA 72 shall be followed. Environments with large amounts of dust, dirt, or high air velocity require more frequent maintenance. A maintenance agreement should be arranged through the local manufacturer's representative. Maintenance should be scheduled as required by National and/or local fire codes and should be performed by authorized professional life safety system installers only. Adequate written records of all inspections should be kept.

Limit-D2-2016

Installation Precautions

Adherence to the following will aid in problem-free installation with long-term reliability:

WARNING - Several different sources of power can be connected to the fire alarm control panel. Disconnect all sources of power before servicing. Control unit and associated equipment may be damaged by removing and/or inserting cards, modules, or interconnecting cables while the unit is energized. Do not attempt to install, service, or operate this unit until manuals are read and understood.

CAUTION - System Re-acceptance Test after Software Changes: To ensure proper system operation, this product must be tested in accordance with NFPA 72 after any programming operation or change in site-specific software. Re-acceptance testing is required after any change, addition or deletion of system components, or after any modification, repair or adjustment to system hardware or wiring. All components, circuits, system operations, or software functions known to be affected by a change must be 100% tested. In addition, to ensure that other operations are not inadvertently affected, at least 10% of initiating devices that are not directly affected by the change, up to a maximum of 50 devices, must also be tested and proper system operation verified.

This system meets NFPA requirements for operation at 0-49º C/ 32-120º F and at a relative humidity 93% ± 2% RH (non-condensing) at 32°C ± 2°C (90°F ± 3°F). However, the useful life of the system's standby batteries and the electronic components may be adversely affected by extreme temperature ranges and humidity. Therefore, it is recommended that this system and its peripherals be installed in an environment with a normal room temperature of 15-27º C/60-80º F.

Verify that wire sizes are adequate for all initiating and indicating device loops. Most devices cannot tolerate more than a 10% I.R. drop from the specified device voltage.

Like all solid state electronic devices, this system may operate erratically or can be damaged when subjected to lightning induced transients. Although no system is completely immune from lightning transients and interference, proper grounding will reduce susceptibility. Overhead or outside aerial wiring is not recommended, due to an increased susceptibility to nearby lightning strikes. Consult with the Technical Services Department if any problems are anticipated or encountered.

Disconnect AC power and batteries prior to removing or inserting circuit boards. Failure to do so can damage circuits.

Remove all electronic assemblies prior to any drilling, filing, reaming, or punching of the enclosure. When possible, make all cable entries from the sides or rear. Before making modifications, verify that they will not interfere with battery, transformer, or printed circuit board location.

Do not tighten screw terminals more than 9 in-lbs. Over-tightening may damage threads, resulting in reduced terminal contact pressure and difficulty with screw terminal removal.

This system contains static-sensitive components. Always ground yourself with a proper wrist strap before handling any circuits so that static charges are removed from the body. Use static suppressive packaging to protect electronic assemblies removed from the unit.

Units with a touchscreen display should be cleaned with a dry, clean, lint free/microfiber cloth. If additional cleaning is required, apply a small amount of Isopropyl alcohol to the cloth and wipe clean. Do not use detergents, solvents, or water for cleaning. Do not spray liquid directly onto the display.

Follow the instructions in the installation, operating, and programming manuals. These instructions must be followed to avoid damage to the control panel and associated equipment. FACP operation and reliability depend upon proper installation.

Precau-D2-11-2017

FCC Warning

WARNING: This equipment generates, uses, and can radiate radio frequency energy and if not installed and used in accordance with the instruction manual may cause interference to radio communications. It has been tested and found to comply with the limits for Class A computing devices pursuant to Subpart B of Part 15 of FCC Rules, which is designed to provide reasonable protection against such interference when devices are operated in a commercial environment. Operation of this equipment in a residential area is likely to cause interference, in which case the user will be required to correct the interference at his or her own expense.

Canadian Requirements

This digital apparatus does not exceed the Class A limits for radiation noise emissions from digital apparatus set out in the Radio Interference Regulations of the Canadian Department of Communications.

Le present appareil numerique n'emet pas de bruits radioelectriques depassant les limites applicables aux appareils numeriques de la classe A prescrites dans le Reglement sur le brouillage radioelectrique edicte par le ministere des Communications du Canada.

HARSH™, **NIS™**, and **NOTI•FIRE•NET™** are all trademarks; and **Acclimate® Plus™**, **eVance®**, **FlashScan®**, **FAAST Fire Alarm Aspiration Sensing Technology®, Honeywell®**, **Intelligent FAAST®, NOTIFIER®**, **ONYX®**, **ONYXWorks®**, **SWIFT®**, **VeriFire®**, and **VIEW®** are all registered trademarks of Honeywell International Inc. **Microsoft®** and **Windows®** are registered trademarks of the Microsoft Corporation. **Chrome™** and **Google™** are trademarks of Google Inc. **Firefox®** is a registered trademark of The Mozilla Foundation.

©2019 by Honeywell International Inc. All rights reserved. Unauthorized use of this document is strictly prohibited.

Software Downloads

In order to supply the latest features and functionality in fire alarm and life safety technology to our customers, we make frequent upgrades to the embedded software in our products. To ensure that you are installing and programming the latest features, we strongly recommend that you download the most current version of software for each product prior to commissioning any system. Contact Technical Support with any questions about software and the appropriate version for a specific application.

Documentation Feedback

Your feedback helps us keep our documentation up-to-date and accurate. If you have any comments or suggestions about our online Help or printed manuals, you can email us.

Please include the following information:

- Product name and version number (if applicable)
- Printed manual or online Help
- Topic Title (for online Help)
- Page number (for printed manual)
- Brief description of content you think should be improved or corrected
- Your suggestion for how to correct/improve documentation

Send email messages to:

FireSystems.TechPubs@honeywell.com

Please note this email address is for documentation feedback only. If you have any technical issues, please contact Technical Services.

Table of Contents

Section 1: About This Manual 7
1.1: Standards and Other Documents 7
1.2: UL 864 9th and 10th Edition 7
1.2.1: Application Not Consistent with UL and NFPA Standards 8
1.3: Supplemental Documentation 8
1.4: Cautions and Warnings 9
1.5: Manual Conventions 9

Section 2: Concepts of Smoke Control 10
2.1: Introduction 10
2.1.1: Definitions 10
2.1.2: Abbreviations 11
2.2: Smoke Movement 11
2.2.1: Stack Effect 12
2.2.2: Buoyancy 12
2.2.3: Expansion 12
2.2.4: Wind 13
2.2.5: Elevator Piston Effect 13
2.2.6: HVAC Systems 13
2.3: Principles of Smoke Control 14
2.3.1: Smoke Containment 14
2.3.2: Purging 15
2.3.3: Door-Opening Forces 15
2.4: General System Components 15
2.4.1: HVAC Equipment 15
2.4.2: Control Equipment 19
2.4.3: Initiating Devices 19
2.5: Smoke Control System Types 19
2.5.1: Stairtower Pressurization Systems 20
2.5.2: Elevator Hoistway Systems 21
2.5.3: Zoned Smoke Control Systems 24
2.6: Basic Smoke Control System Operation 26

Section 3: The SCS/SCE 29
3.1: Introduction 29
3.1.1: Hardware Features 29
3.1.2: SCS V4.0 Software Features 29
3.2: Smoke Control Station (SCS-8) 30
3.3: Smoke Control Lamp Driver (SCS-8L) 31
3.3.1: Inventory 32
3.4: Preliminary SCS-8/SCE-8 Design Considerations 32
3.4.1: Related Documentation 32
3.4.2: Fan and Damper Operation with the SCS-8 33
3.4.3: Design Considerations 33
3.4.4: Selecting Fan and Damper Capabilities 33
3.4.5: Switch Group Type 34
3.4.6: Switch Group Type Configuration 34
3.4.7: Dipswitch Setting 36
3.4.8: EIA-485 Addressing 36
3.4.9: Point Assignment 37
3.5: Cabinet and Chassis Mounting 37
3.6: SCS-8/SCE-8 Installation 38
3.7: SCS-8L/SCE-8L Installation 43
3.8: Configuration 49
3.8.1: Firefighter's Smoke Control Station (FSCS) Mode 49
3.8.2: Heating, Ventilating & Air Conditioning (HVAC) Mode 60
3.9: Programming 69
3.9.1: NFS2-3030, NFS-320, NFS2-640, and NCA-2 69
3.9.2: NFS2-3030 and NCA-2/NFS2-640/NFS-320 Programming 70
3.9.3: NFS-320/NFS2-640 Programming (HVAC Mode, No CBE Lockout) 73
3.9.4: INA Programming (Legacy Systems) 74
3.9.5: AM2020/AFP1010 Programming (Legacy Systems) 74

3.10: Building-Specific Operation and Programming Examples 81
3.10.1: Dedicated System Design 82
3.10.2: Non-dedicated System Design 88

Section 4: Restrictions 96
4.1: Equipment 96
4.2: Installation 96
4.3: Operation 96
4.4: Programming 96
4.5: Testing 97

Section 5: Ratings and Wiring Diagrams 98
5.1: Introduction 98
5.2: Air Flow Switches 98
5.3: Dedicated Smoke Control System Wiring Diagrams 99
5.3.1: Fans 99
5.3.2: Motorized Dampers 104
5.3.3: EP Dampers 110
5.4: Non-dedicated Smoke Control System Wiring Diagrams 116
5.4.1: Fans 116
5.4.2: Motorized Dampers 122
5.4.3: EP Dampers 131
5.5: HVAC Wiring Diagrams 140
5.5.1: Fans 140
5.5.2: Motorized Dampers 151
5.5.3: EP Dampers 166
A.1: Introduction 180
A.2: Lists and Equations 180
A.2.1: Control-By-Event Programming Constraints 180
A.3: Operators 181
A.4: Size Limitations 183
A.5: The Null Control-By-Event 185
A.6: Programming Examples 187
B.1: NFS-320 and NFS2-640 Control-By-Event 190
B.2: NFS2-3030 Control-By-Event 190
B.3: NCA-2 Operation 190
B.4: Appendix D SCS/SCE Worksheets 190
B.5: Compatibility with Other Systems 190
C.1: Mode A Operation 191
C.2: Mode B Operation 191
C.2.1: Mode B without CBE Lockout: Independent Switch-Group Operation 191
C.2.2: Mode B with CBE Lockout 191
C.3: Multiple Smoke Control Station 191
C.4: Read Status 194
C.4.1: History/Printer 195
C.5: Pairing 195
C.6: Custom Graphic Annunciator with White Light Indication 195

Section 1: About This Manual

1.1 Standards and Other Documents

This Fire Alarm Control Panel complies with the following NFPA standards:

NFPA 12 CO2 Extinguishing Systems

NFPA 12A Halon 1301 Extinguishing Systems

NFPA 13 Sprinkler Systems

NFPA 15 Water Spray Systems

NFPA 16 Foam/Water Deluge and Foam/Water Spray Systems

NFPA 17 Dry Chemical Extinguishing Systems

NFPA 17A Wet Chemical Extinguishing Systems

NFPA 72 Central Station Fire Alarm Systems (Automatic, Manual and Waterflow) Protected Premises Unit (requires Notifier UDACT).

NFPA 72 Local (Automatic, Manual, Waterflow and Sprinkler Supervisory) Fire Alarm Systems.

NFPA 72 Auxiliary (Automatic, Manual and Waterflow) Fire Alarm Systems (requires TM-4).

NFPA 72 Remote Station (Automatic, Manual and Waterflow) Fire Alarm Systems

NFPA 72 Proprietary (Automatic, Manual and Waterflow) Fire Alarm Systems (Protected Premises Unit).

NFPA 92 Standard for Smoke-Control Systems

NFPA 2001 Clean Agent Fire Extinguishing Systems

The installer should be familiar with the following documents and standards:

NFPA 72 Initiating Devices for Fire Alarm Systems

NFPA 72 Inspection, Testing and Maintenance for Fire Alarm Systems

NFPA 72 Notification Appliances for Fire Alarm Systems

Underwriters Laboratories

UL 38 Manually Actuated Signaling Boxes

UL 217 Smoke Detectors, Single and Multiple Station

UL 228 Door Closers - Holders for Fire Protective Signaling Systems

UL 268 Smoke Detectors for Fire Protective Signaling Systems

UL 268A Smoke Detectors for Duct Applications

UL 346 Waterflow Indicators for Fire Protective Signaling Systems

UL 464 Audible Signaling Appliances

UL 521 Heat Detectors for Fire Protective Signaling Systems

UL 864 Standard for Control Units for Fire Protective Signaling Systems

UL 1481 Power Supplies for Fire Protective Signaling Systems

UL 1971 Visual Signaling Appliances

UL 1076 Proprietary Burglar Alarm Systems

Underwriters Laboratories of Canada (ULC)

Standard CAN/ULC-S527-M99

CAN/ULC-S524-M91 Standard for the Installation of Fire Alarm Systems

Other

EIA-485 and EIA-232 Serial Interface Standards

NEC Article 300 Wiring Methods

NEC Article 760 Fire Protective Signaling Systems

Applicable Local and State Building Codes

Requirements of the Local Authority Having Jurisdiction

C22.1-98 The Canadian Electrical Code, Part 1

1.2 UL 864 9th and 10th Edition

Per the UL Continuing Certification Program, UL 864 9th edition fire alarm control equipment will retain certification after the rollout of UL 10th edition (12/2/2018).

Installations of UL 864 10th Edition certified equipment are permitted to use UL864 9th Edition certified equipment when approved by the local Authority Having Jurisdiction (AHJ).

For product compliance, refer to the UL/ULC listing cards located on the UL online certification directory. UL Product iQ: https://iq.ulprospector.com/en/

Products mentioned in this manual that have not received UL 864 9th Edition certification:

- AM2020/AFP1010
- NFS-640
- NFS-3030
- NCA
- INA
- XP Transponders
- XP5 Transponders
- CMX/MMX control and monitor modules
- MPS-24A

1.2.1 Application Not Consistent with UL and NFPA Standards

The HVAC mode is not consistent with the UL and NFPA standards for smoke control. This mode should be used for fan shutdown and building heating, ventilating, and air conditioning purposes only. This application is described in Heating, Ventilating & Air Conditioning (HVAC) Mode on page 60 and HVAC Wiring Diagrams on page 140.

1.3 Supplemental Documentation

The table below provides a list of documents referenced in this manual, as well as documents for selected other compatible devices. The Veri•Fire Tools Programming Utility is available for download from the manufacturer's website. The document series chart (DOC-NOT) provides the current document revision. A copy of this document is included in every shipment.

Compatible Conventional Devices (Non-addressable)	**Document Number**
Device Compatibility Document	15378
Fire Alarm Control Panel (FACP) and Network Annunciator	**Document Number**
NFS-320 Listing Document	52745LD
NFS-640 Installation, Operations, and Programming Manuals	51332, 51334, 51333
NFS2-640 Listing Document	52741LD
NFS-3030 Installation, Operations, and Programming Manuals	51330, 51344, 51345
NFS2-3030 Listing Document	LS10006-051NF-E
AM2020/AFP-1010 Manual	15088
NCA Network Control Annunciator	51482
NCA-2 Network Control Annunciator	52482
SLC Wiring Manual	51253
Note: For intelligent SLC devices, refer to the SLC Wiring Manual	
ONYXWorks Workstation Listing Document	LS10050-051NF-E
ONYXWorks Workstation Installation and Operations Manual	LS10050-000NF-E
Cabinets & Chassis	**Document Number**
CAB-3/CAB-4 Series Cabinet Installation Document	15330
ABS-4D Backbox Product Installation Document	15073
Other System Components	**Document Number**
LDM Series Lamp Driver Annunciator	15885
XP Transponder Manual	15888
XP10-M	I56-1803
XP5 Series Manual	50786
XP6-C	I56-1805
XP6-MA	I56-1806
XP6-R	I56-1804

Table 1.1 Reference Documentation

1.4 Cautions and Warnings

This manual contains cautions and warnings to alert the reader as follows:

CAUTION:

INFORMATION ABOUT PROCEDURES THAT COULD CAUSE PROGRAMMING ERRORS, RUNTIME ERRORS, OR EQUIPMENT DAMAGE.

WARNING:

INDICATES INFORMATION ABOUT PROCEDURES THAT COULD CAUSE IRREVERSIBLE DAMAGE TO THE CONTROL PANEL, IRREVERSIBLE LOSS OF PROGRAMMING DATA OR PERSONAL INJURY.

1.5 Manual Conventions

In this manual:

- The term “NFS2-3030” refers to both the NFS2-3030 and NFS-3030 FACPs unless noted otherwise.
- The term “NCA-2” refers to both the NCA-2 and the NCA Network Control Annunciators unless otherwise noted.
- The term “NFS2-640” refers to the NFS2-640 as well as the NFS-640/E.
- The term “NFS-320” refers to the NFS-320 as well as the NFS-320E, NFS-320C, and CPU-320SYS.

Section 2: Concepts of Smoke Control

2.1 Introduction

Section 2: serves as a general outline of the concepts, components, and implementation of a smoke control system. The user should be familiar with the following documents, codes, and standards and refer to them for additional information:

- NFPA 92 Smoke Control Systems
- ASHRAE publication entitled *Design of Smoke Management Systems*
- NFPA 72 National Fire Alarm Code
- NFPA 101 Life Safety Code
- NFPA 90A Installation of Air Conditioning and Ventilation Systems
- ULC/ORD-C100-13 Smoke Control System Equipment

2.1.1 Definitions

Following are definitions of terms that are used in this manual.

Automatic Control. A smoke control system operates in this state when initiation occurs automatically from detection of a fire by the fire detection system.

Buoyancy. The ability or tendency of smoke to rise in air.

Compensated System. A smoke control system where the air injected into a stairtower is modulated or excess pressure is vented depending on the number of doors opened or closed in the stairtower. This keeps the pressure barrier relatively constant.

Dedicated System. A smoke control system designed for the sole purpose of controlling smoke within a building (equipment is not linked to building HVAC controls). This is accomplished by forming a system of air movement that is separate and distinct from the building's HVAC system and only operates to control smoke.

Expansion. The ability or tendency of smoke to spread out and encompass larger areas.

Firefighter's Smoke Control Station. Firefighter's smoke control station (FSCS) includes monitoring and overriding capabilities over smoke control systems and equipment provided at designated location(s) within the building for the use of the fire department.

Manual Control. A smoke control system operates in this state when controls for the station are changed manually to override automatic control functions.

Multiple Smoke Control Station (MSCS). Special FSCS application for redundant systems (NCA-2 feature; see Appendix C.3, “Multiple Smoke Control Station”).

Noncompensated System. A smoke control system where a single speed fan provides pressurization in a stairtower. Pressure will vary depending on the number of doors opened into the stairtower.

Non-dedicated System. A smoke control system that shares components with other air moving equipment. When the smoke control mode is activated, the operating of the building's air moving equipment changes in order to accomplish the objectives of the smoke control design.

OFF/CLOSED Control ($CON_{OFF/CL}$) One of the four protocol points associated with each switch group. A $CON_{OFF/CL}$ protocol point is used with an appropriate control module to ensure that a fan is off or a damper is closed. Therefore, when a $CON_{OFF/CL}$ control module is active, the fan must be off or the damper must be closed.

OFF/CLOSED Verification ($VER_{OFF/CL}$) One of the four protocol points associated with each switch group. A $VER_{OFF/CL}$ protocol point is used with an appropriate monitor module to check the off status of a fan or the closed position of a damper. Therefore, when a $VER_{OFF/CL}$ monitor module is active, the fan is off or the damper is closed.

ON/OPEN Control ($CON_{ON/OP}$) One of the four protocol points associated with each switch group. A $CON_{ON/OP}$ protocol point is used with an appropriate control module to ensure that a fan is on or a damper is open. Therefore, when a $CON_{ON/OP}$ control module is active, the fan must be on or the damper must be open.

ON/OPEN Verification ($VER_{ON/OP}$) One of the four protocol points associated with each switch group. A $VER_{ON/OP}$ protocol point is used with an appropriate monitor module to check the on status of a fan or the open position of a damper. Therefore, when a $VER_{ON/OP}$ monitor module is active, the fan is on or the damper is open.

Pairing. Pairing is a special SCS application that allows FSCS modules to be grouped so that more than one FSCS module will act as a single FSCS module. (See Appendix C.5, “Pairing”.)

Pressurized Stairtowers. A type of smoke control system in which stair shafts are mechanically pressurized with outdoor air to keep smoke from contaminating them during a fire.

Smoke. The airborne solid particulates and gases evolved when a material undergoes pyrolysis or combustion, together with the quantity of air that is mixed into the mass.

Smoke Barrier. A vertical or horizontal membrane, such as a wall, floor, or ceiling assembly, that is designed and constructed to resist the movement of smoke. A smoke barrier may or may not have a fire resistance rating. Smoke barriers may have openings protected by closing devices or adequate air flows. Smoke barriers define all the boundaries of smoke control zones including walls, floors and ceilings that must be constructed as continuous structures to limit the spread of smoke.

Smoke Control Mode. A predefined operational configuration of a system or device for the purpose of smoke control.

Smoke Control System. An engineered system that uses mechanical fans to produce airflows and pressure differences across smoke barriers to limit and direct smoke movement. A smoke control system uses fans to move air and produce pressure variances between smoke barriers which reduce smoke and direct its movement. A smoke control system consists of control equipment, intermediate equip-

ment such as motor controllers and electro-pneumatic valves, and the controlled fans and dampers. Smoke Control Systems include shaft protection and floor protection systems. Shaft protection includes stairtower pressurization systems and elevator hoistway systems. The individual system or combination of systems utilized depends on local codes and specific building applications.

Smoke Control Zone. A space within a building enclosed by smoke barriers, including the top and bottom, that is part of a zoned smoke control system. Smoke Control Zones are intended to reduce smoke infiltration into non-fire areas. This is accomplished by using partitions, floors and doors to create separate compartments which can be isolated from one another during a fire. The compartments can be entire floors or sections within a floor. Fans are utilized to create pressure differences between smoke control zones, thus limiting the spread of smoke from the original fire area.

Smoke Damper. A device designed to resist the passage of air or smoke that meets the requirements of UL 555S Standard for Smoke Dampers. A combination fire and smoke damper should meet the requirements of UL 555 Standard for Fire Dampers, UL 555C Standard for Ceiling Dampers, and UL 555S Standard for Smoke Dampers. Units for use in Canada should meet the requirements of ULC/ORD-C100-92 Smoke Control System Equipment. Smoke dampers are required in ducts at points where the ducts enter or leave a smoke control zone, unless a duct is part of the smoke control system. Smoke dampers must restrict smoke or air movement out of or into a specific area.

Smoke Exhaust System. A mechanical or gravity system intended to move smoke from the smoke zone to the exterior of the building. It can include smoke removal, purging, and venting systems, as well as the function of exhaust fans utilized to reduce the pressure in a smoke zone. Maintenance of a tenable environment in the smoke zone is not within the capability of these systems. A fire floor exhaust increases the pressure difference across the stairtower doors in addition to reducing the pressure on the fire floor.

Smoke Proof Enclosure. A continuous stairway which is enclosed from top to bottom by a two-hour fire wall and exits to a public area. Entry into the stairway must be through vestibules or outside balconies on each floor. The design must limit smoke entry and include natural or mechanical ventilation.

Smoke Zone. The smoke control zone in which the fire is located.

Stack Effect. The vertical airflow within a building caused by temperature differences between the interior and exterior of the building.

Stairtower Pressurization Systems. A system that maintains a smoke-free environment in the stairtower during a fire, for evacuation of building occupants and as a route for firefighters. It should limit smoke infiltration from the fire floor.

Tenable Environment. An environment in which the quantity and location of smoke is limited or restricted to allow for evacuation. A tenable environment is one in which life can be sustained. In a zoned smoke control system, pressure differences are used to maintain a tenable environment in an area intended to protect building personnel during evacuation. Criteria for this concept have not yet been developed and are not yet widely accepted.

Trouble Delay Timer. FSCS software timer that defines a time period for equipment to respond to an event; if the defined state is not confirmed within this time, a trouble condition occurs.

Vestibule. A small entrance hall or room, either to a building or to a room within a building.

Zoned Smoke Control. A smoke control system that includes exhaust for the smoke zone and pressurization for all contiguous smoke control zones. The remaining smoke control zones in the building may be pressurized as well. An automatic smoke detection system may be used to automatically activate a zoned smoke control system. A smoke detection system with limited coverage (spacing greater than 900 square feet per detector) may be used if the detectors are placed where they can detect smoke before it leaves their detection area. Otherwise, the correct smoke zone may not be annunciated and the appropriate fans and dampers may not respond. Detector location must be carefully considered to prevent actuation of a detector outside the zone where the fire started, since air movement and pressurization of incorrect zones could result and create an even greater hazard. A zoned smoke control system may be activated by a waterflow switch or heat detector if the devices and their pipes or wiring are part of the smoke control zone.

NOTE: Some of the definitions in this section are reprinted with permission from NFPA 92A, Smoke Control Systems, Copyright © 1993, National Fire Protection Association, Quincy, MA 2269. This reprinted material is not the complete and official position of the National Fire Protection Association on the referenced subject which is represented only by the standard in its entirety.

2.1.2 Abbreviations

In order to simplify system configuration discussions and technical illustrations, the following abbreviations are used for control modules and monitor modules. These are in addition to industry-wide abbreviations already specified in the Definitions section.

Term	Code Used in Manual	Part Number
Control Module, Relay Module	CM	Control modules: FCM-1, XPC, XP5-C, CMX-1, CMX-2 Relay modules: FRM-1, XPR, CMX-1 (relay configuration), CMX-2 (relay configuration)
Monitor Module	MM	FMM-1, FMM-101, FDM-1, XPM, XP5-M, MMX-1, FZM-1
Note: the FDRM-1 acts as both CM or MM, depending on application.		

Table 2.1 Chart of Abbreviations

2.2 Smoke Movement

During a fire inside of a building, smoke often flows away from the fire to unwanted areas, threatening life and damaging property. Exit passageways, stairwells and elevator shafts often become smoke-filled, inhibiting or preventing safe evacuation.

All fires produce smoke and the movement of smoke will follow the same pattern as the overall air movement within a building. Very simply, a smoke control system must be able to inhibit the flow of smoke within a building. Elements that cause the movement of smoke include one or more of the following:

- stack effect
- buoyancy of the smoke
- expansion
- wind
- elevator effect
- the HVAC system

Each element is described in the paragraphs below.

2.2.1 Stack Effect

Stack effect is defined as the vertical flow of air due to temperature differences between the interior and exterior of a building. Generally, there is an upward movement of air within building shafts (stairwells, elevator hoistways, etc.) when the air outside the building is colder than the air inside. This is referred to as normal stack effect. The air in the building has a tendency to rise because it is warmer and less dense than the outside air. The taller a building is and the greater the temperature differences between the building interior and exterior are, the greater the tendency is for air to rise in the shafts. The opposite is true when the outside temperature is warmer than the temperature inside the building, causing a downward movement of air within building shafts. This is referred to as reverse stack effect. The overall airflow tendencies within a building due to normal and reverse stack effect are shown in Figure 2.1.

The neutral plane of a building is defined as the elevation where the hydrostatic pressure inside the building equals that outside. Normally the neutral plane is located at the midpoint of the building, but can occur at any floor and depends upon building design. The neutral plane of a building should be determined before design of the smoke control system. Refer to the ASHRAE publication Design of Smoke Management Systems for information on calculating the neutral plane of a building.

Another factor involved in determining stack effect is the temperature of the smoke. Reverse stack effect, as described below, reacts only with relatively cool smoke caused as a result of smoldering fires. Relatively hot smoke, the result of fast burning fires, will still have a tendency to rise into the shaft against reverse stack effect due to the effects of buoyancy. Normal stack effect reacts with both hot and cool smoke.

In a building with normal stack effect, smoke from a fire will follow the airflow into the shaft. If the source of the fire is below the neutral plane, the smoke will flow up the building shaft until after it crosses the neutral plane. Once the smoke crosses the neutral plane, its tendency will be to flow into the floors above the neutral plane. The effects of buoyancy can also add to the upward movement of smoke due to the temperature of the smoke, as described in the next section.

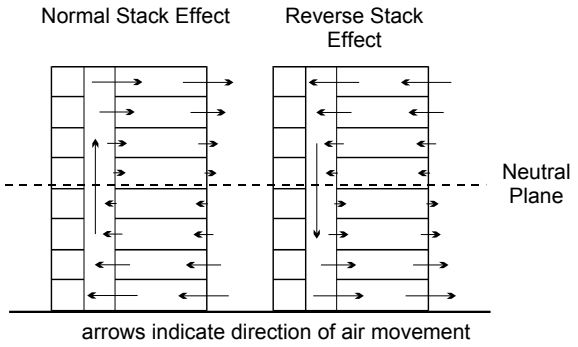

Figure 2.1 Air Flow Due to Stack Effect

In a building with reverse stack effect, only relatively cool smoke will follow the downward tendency of air into the shaft. If a smoldering fire occurs on a floor above the neutral plane during reverse stack effect conditions, the smoke will travel into and down the shaft and deposit itself on the floors below the neutral plane. In the case of hot smoke, buoyancy forces can counteract reverse stack effect causing the smoke to move up the shaft.

2.2.2 Buoyancy

High-temperature smoke has a lower density than cool smoke. Because of this reduced density, it has a greater tendency to rise through the air and create a buoyant pressure in the smoke zone. The pressure buildup within a compartment due to buoyancy forces moves smoke to the floor above the fire floor through any leakage paths in the ceiling. The buoyant pressure will also cause smoke movement through any leakage paths in the walls or around doors. As smoke travels away from a fire, its temperature drops due to heat transfer and dilution. Therefore, the effects of buoyancy generally decrease with distance from the fire.

2.2.3 Expansion

In addition to stack effect and buoyancy, the energy released by a fire can cause smoke movement due to expansion. In a fire compartment with only one opening to the building, air will flow into the compartment and hot smoke will flow out. For a fire compartment with open doors and windows, the movement of smoke due to expansion is negligible. However, the effects of expansion should be taken into consideration for tightly sealed compartments where fires can occur. It is possible for the volume of smoke to almost triple in size when temperatures of over 1000°F are reached. For tightly sealed compartments, the buildup of pressure resulting from expansion causes smoke movement through any leakage paths in the walls or around doors.

2.2.4 Wind

Wind can have a dramatic effect on smoke movement. Frequently in fire situations, a window breaks or is left open in the fire compartment. If the opening is on the windward side of the building, the wind causes a buildup of pressure in the fire compartment and forces smoke throughout the floor and possibly to other floors. Pressures caused by the wind in this condition can be large and easily dominate smoke movement throughout the building. If the opening is on the leeward side of the building, the reverse is true. The negative pressure created by the wind vents the smoke from the fire compartment, greatly reducing the smoke movement through the building.

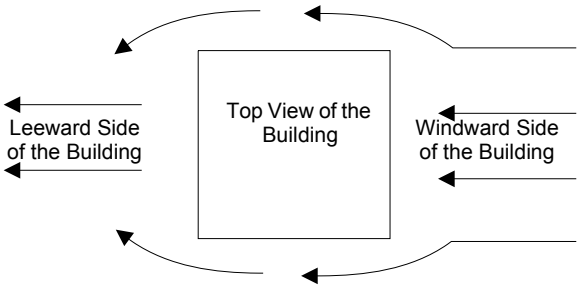

Figure 2.2 Wind Effects on a Building

2.2.5 Elevator Piston Effect

The movement of an elevator car in a shaft produces temporary pressure differences both above and below the moving car. A downward moving elevator car creates a temporary pressure increase in the area below the car and a temporary pressure decrease in the area above the car. The reverse is true for an upward moving elevator car. The temporary pressure increase in the elevator shaft tends to move air into the floors below the car and the temporary pressure decrease tends to move air from the floors above into the elevator shaft, as shown in Figure 2.3. Pressure differences due to the piston effect are greater in single car elevator shafts as compared to multiple car shafts because in a multiple car shaft there is usually more room to the left and right of the moving car to allow for pressure relief.

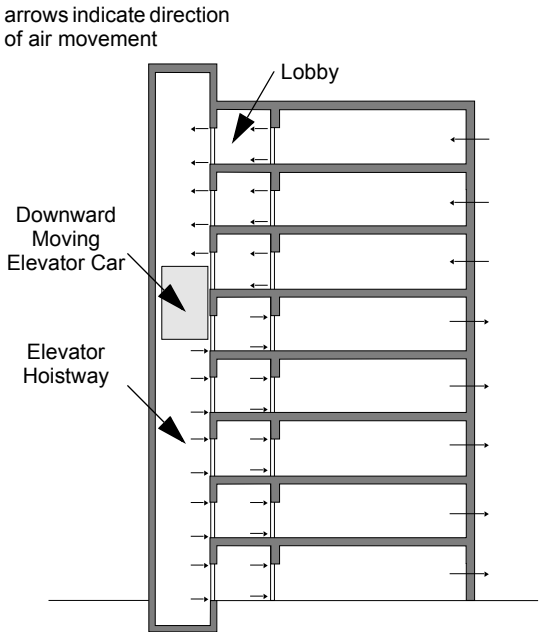

Figure 2.3 Elevator Piston Effect

2.2.6 HVAC Systems

Before the development of smoke control, HVAC systems were shut down when fires were discovered for two main reasons:

- The HVAC system frequently aided the movement of smoke during a fire condition, transporting smoke to every area that it serves.
- The HVAC system also supplied air to the fire space, which has a tendency to fuel a fire.

An HVAC system, however, may aid in the detection of a fire in its early stages by transporting smoke from an unoccupied area to a space where building occupants can be alerted to the fire. Once a fire is detected, the HVAC system should be designed to either shut down the fans or provide a special smoke control mode. If neither of these steps is taken, the HVAC system will transport smoke to every area that the system serves, thus endangering life, damaging property, and inhibiting fire fighting.

However, shutting down the fans does not prevent smoke movement through the supply and return air ducts, air shafts, and other building openings due to stack effect, buoyancy, and wind. Installation of smoke dampers for when the system is shut down can help inhibit smoke movement in this case.

Utilizing an HVAC system for smoke control will be discussed in detail in the sections that follow.

2.3 Principles of Smoke Control

The idea of using pressurization to prevent the movement of smoke into stairwells began to attract attention in the late 1960s. This was followed by utilizing the ventilation system of a building to vent or exhaust the fire floor and pressurize surrounding floors. The term "smoke control" was used to describe these systems that use pressurization, produced by mechanical fans, to limit smoke movement in fire situations. The three major considerations for smoke control are smoke containment, purging, and door-opening forces. These principles are described below.

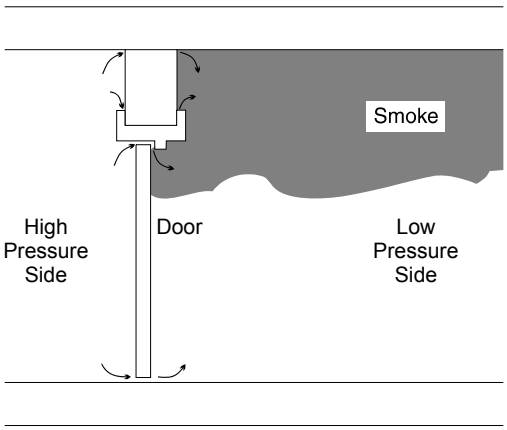

Figure 2.4 Pressurization

2.3.1 Smoke Containment

The area where the fire is located is referred to as the smoke zone. There are two basic principles for containing smoke within that smoke zone:

- Air pressure differences across barriers can act to control smoke movement. This is referred to as pressurization.
- Airflow by itself can control smoke movement if the average air velocity is of sufficient magnitude.

Pressurization

Pressurization results in airflows in the small gaps between smoke control zones preventing smoke movement through these openings. Technically, pressurization uses airflow and thus is a special case of the second principle, but considering the two principles separately is advantageous for smoke control design.

Pressurization is employed by creating pressure differences across partitions that separate the smoke zone from other areas. This can be accomplished by making pressure in the area surrounding the smoke zone higher than pressure in the smoke zone itself (refer to Figure 2.4). Airflow through construction and door cracks prevents the movement of smoke to the high-pressure side. The pressure difference must be sufficient to contain the smoke in the smoke zone and at the same time allow doors leading to exit routes to be opened.

Pressurization is the most desired means of controlling smoke.

Air Flow

When the door in the barrier is open, air flows through the opening. When the air velocity is low, smoke can flow from the smoke zone into unwanted areas. Airflow is employed by controlling the flow of air into a smoke zone and that flow must be sufficient to prevent the migration of smoke from the zone. This process is usually used to prevent the flow of smoke down corridors or through open doorways, as shown in Figure 2.5.

Airflow is not the most practical method of limiting the movement of smoke because of the large quantities of air required.

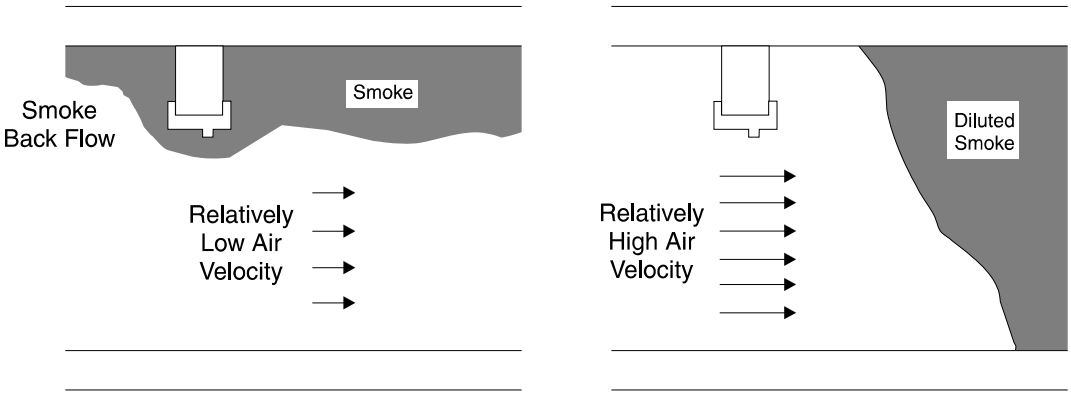

Figure 2.5 Airflow

2.3.2 Purging

Although Pressurization and Airflow have been discussed as the two methods for controlling smoke, it will not always be possible to maintain airflows sufficient to prevent smoke from moving through open doors into a protected area. Ideally, doorways will be open for only short periods of time during evacuation. Smoke that has entered a protected space can be purged or diluted by supplying outside air to the space. Purging is employed through the use of an exhaust inlet, usually located near the ceiling, and a supply outlet, usually located near the floor. The supply and exhaust points must be placed far enough apart to prevent the supply air from blowing directly into the exhaust. If the supply and exhaust points are placed too close, the purging operation will not function properly.

While the process of purging is not an acceptable method of smoke control on its own, it can be used as a supplement to airflow or pressurization.

2.3.3 Door-Opening Forces

A door-opening force is defined as the force required to open a door. During smoke control operation, this force can increase considerably, especially if pressure differences are being used across partitions. The door-opening force during a fire condition can be described as the sum of the forces needed to overcome the pressure difference across the door and to overcome the door closer. This factor must be taken into consideration for a smoke control system because unreasonably high door-opening forces can hinder or prevent people from reaching their escape routes.

2.4 General System Components

In general, all smoke control systems are made up of the following:

- HVAC equipment (fans, dampers, ductwork, etc.)
- Control Equipment (fire alarm control panel, fire fighter's smoke control station, HVAC controls)
- Initiating Devices (smoke detectors, manual pull stations, etc.)

A typical layout is shown in Figure 2.6.

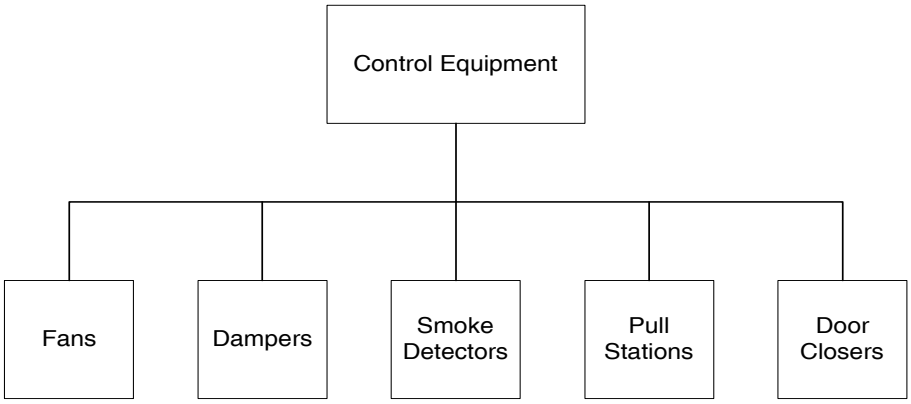

Figure 2.6 Smoke Control System General Components

2.4.1 HVAC Equipment

HVAC Systems

Whether serving the dual purpose of maintaining the environmental conditions in the building and controlling smoke in a fire situation (Non-dedicated System), or the sole purpose of controlling smoke (Dedicated System) - HVAC systems can usually be adapted for smoke control. When used for smoke control applications, HVAC systems must have the following capabilities:

- Supply outside air to a space,
- Return air from a space,
- Exhaust air from a space to the outside.

Some HVAC systems can provide these capabilities without modification.

An HVAC system can consist of nothing more than a fan in a housing, such as a roof-mounted exhaust fan, or it can be a more complex system with ductwork, supply air outlets, return air inlets, fresh air intakes, humidifiers, filters, heating and cooling coils, preheat coils, and dampers. Examples of commonly used HVAC units and their effects on smoke control are explained below:

Individual Floor Units. Air-handling units of this type usually serve one floor or a portion of a floor. These units may or may not have separate supply and exhaust fans. Individual floor units can be utilized in a smoke control system as long as they are capable of providing sufficient outside air and exhaust capability.

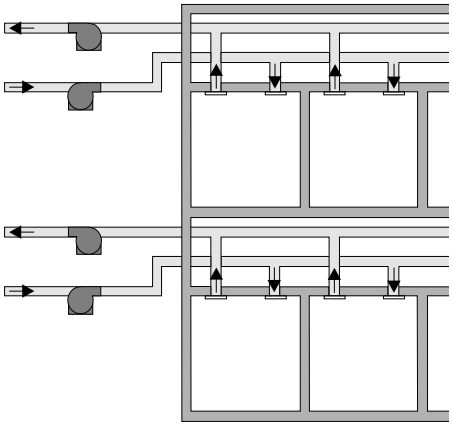

Figure 2.7 Individual Floor Units

Central System. Centralized equipment is usually employed to provide HVAC functions to multiple floors of a building. These types of systems may require dampers for the supply and exhaust shafts at each floor. Dampers at each floor for the exhaust shaft provide the capability to exhaust smoke from the fire floor while closing the dampers for all other floors. This prevents the unwanted movement of smoke to other floors that the unit serves. Dampers at each floor for the supply shaft provide the capability to pressurize the floors surrounding the fire floor while closing the dampers for all floors where pressurization is not desired.

Induction Units. Induction-type air-handling units are usually used in conjunction with a central HVAC system which supplies high-pressure air to the induction units. Induction units are located around the outside of a building and are used to condition the air for areas around the perimeter of the building. Room air is then drawn into the induction unit and mixed with the primary air from the central system and returned to the room. Induction units serving a fire area should be shut down or the primary air from the central system should be closed off.

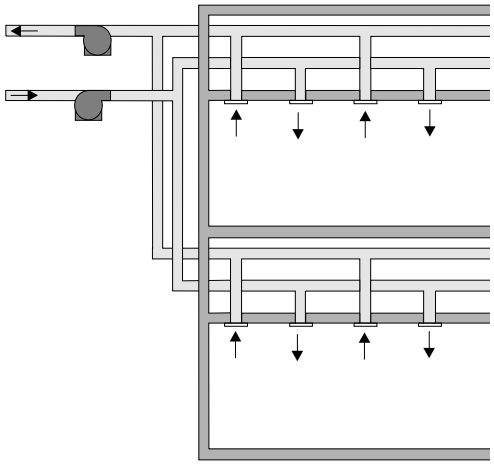

Figure 2.8 Central HVAC System

Dual Duct Systems. Dual duct systems have separate heating and cooling coils, each located in a separate compartment. These types of systems also have separate ducts to supply hot and cold air from each coil compartment to mixing boxes. The mixing boxes are used to mix the hot and cold air which will be supplied to the area served.

Multizone Systems. Multizone systems are similar to dual duct systems because they have heating and cooling coils located in separate compartments. The difference is that multizone systems mix the air at the unit and supply the mixture through low-pressure ducts to each space.

Variable Air Volume Systems. Variable Air Volume (VAV) systems usually supply central cooling only. The individual areas served by these types of systems typically reheat the air near or in the area to be served or have other sources of heating. Some VAV systems connect a bypass from the intake side of the supply fan to the outlet side of the supply fan, as shown in Figure 2.10, to reduce supply air volumes and pressure in the duct work. Such bypasses must be closed for smoke control applications to ensure sufficient pressurization of protected areas.

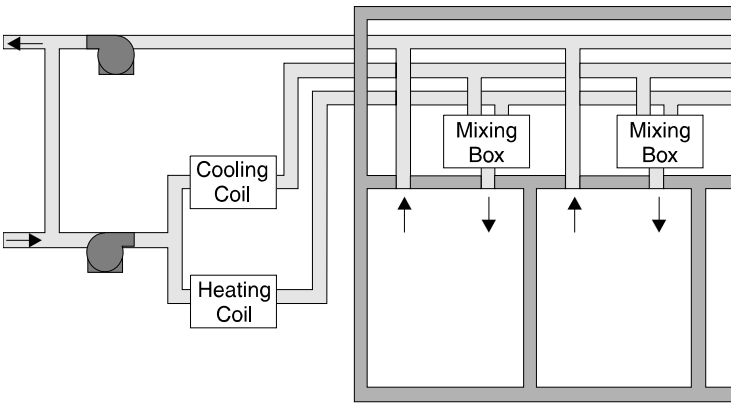

Figure 2.9 Dual Duct System

Fan-Powered Terminals. Fan-powered terminals are used in conjunction with VAV systems to provide the reheat capability of cool air being supplied to a particular area and to circulate air within the space. Terminal unit fans serving a fire area must be shut off for smoke control applications. During a fire condition, terminal unit fans serving other areas may continue to operate normally.

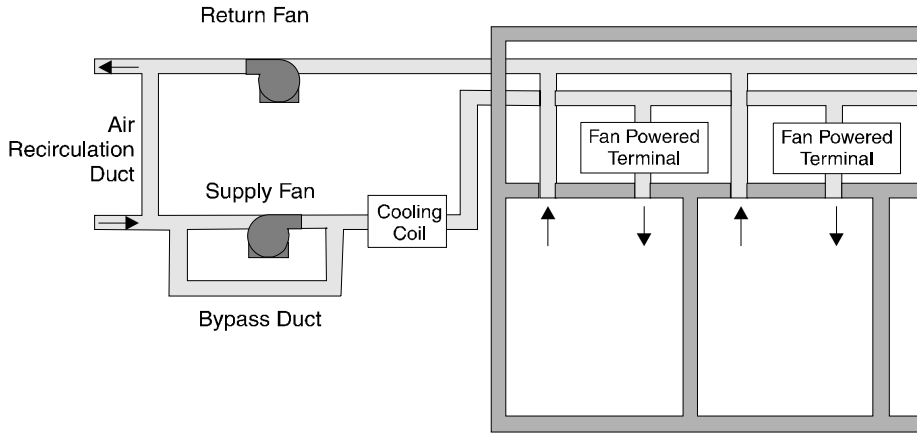

Figure 2.10 VAV System with Fan Powered Terminals

Ductwork

Ductwork is constructed of a variety of materials including steel, aluminum, concrete, and masonry. Ductwork usually connects the fans with the areas to be served. Air travels from the supply fan through the supply ducts into the building. Return air is often pulled through the plenum space above the ceiling as shown in Figure 2.11a. Ductwork, however, can be used for the return air as well, as shown in Figure 2.11b. Both the supply and the return ductwork (when used) are usually located in the area above a suspended ceiling.

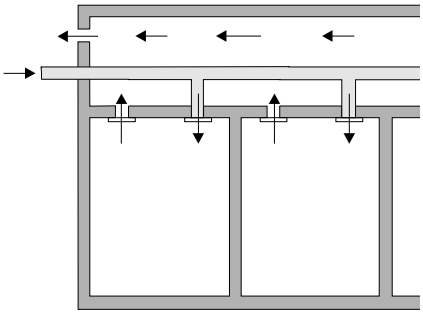

Figure 2.11a

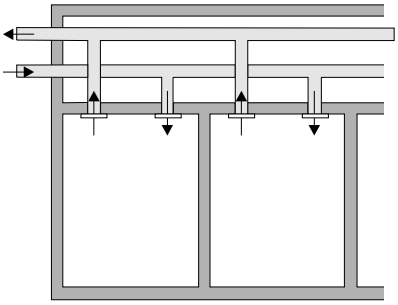

Figure 2.11b

Figure 2.11 Supply and Return Ductwork with Plenum Return (a) and Duct Return (b)

Fans

There are two general types of fans: centrifugal and axial. An illustration of the basic parts of each is located in Figure 2.12. Airflow out of a centrifugal fan is primarily in the direction perpendicular to the airflow in, whereas airflow out of an axial fan is primarily in a direction parallel to the airflow in.

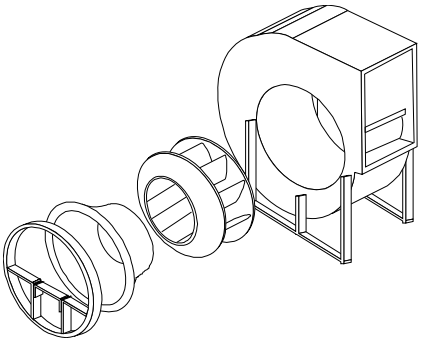

Centrifugal Fan

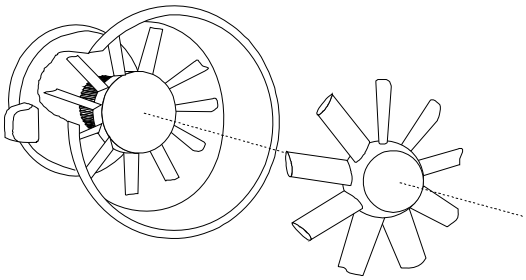

Axial Fan

Figure 2.12 Fan Types

Centrifugal Fans. Centrifugal fans are usually classified by impeller design. The three types are forward-curved, backward-curved, and airfoil.

Forward-curved centrifugal fans rotate at a relatively low speed and are generally used to produce high flow rates and low static pressures. They are commonly used for low-pressure HVAC applications including residential furnaces and packaged air-conditioning equipment. Backward-curved fans rotate at approximately twice the speed of forward-curved fans and are used for general purpose HVAC applications. These type fans are more efficient than forward-curved fans and are commonly more expensive. Both forward- and backward-curved fans have single width blades. Airfoil fans are basically backward-curved fans with blades of varying thicknesses. Airfoil blades are designed with the same technology that is used to design airplane wings. Airfoil fans are used for general purpose HVAC, but are reserved for large system applications where high pressures are needed.

Backward rotation of a centrifugal fan results in reduced airflow in the normal direction. It does not result in reverse airflow, as is a common misconception.

Axial Fans. The most common types of axial fans are propeller fans, tubeaxial fans, and vaneaxial fans.

The majority of propeller fans are designed with the goal of providing high flow rates and low pressures. Some common applications include kitchen exhaust, rest room exhaust, stairwell pressurization, and space ventilation. Propeller fans are highly susceptible to adverse pressure conditions such as the effects of wind. Tubeaxial fans are capable of operating at higher pressures than propeller fans. Blades of tubeaxial fans can be of single thickness or airfoil design. Tubeaxial fans are used to provide low- to medium-pressures for HVAC applications. Vaneaxial fans are capable of operating at higher pressures than tubeaxial fans. Blades of vaneaxial fans can be of single thickness or airfoil design. Vaneaxial fans are used to provide low- to high-pressures for HVAC applications.

Unlike centrifugal fans, the backward rotation of axial fans normally results in a reverse airflow. This reverse airflow is at a reduced rate.

Dampers

In HVAC systems, dampers are used to balance airflow, control airflow, relieve excess pressure, resist the passage of fire, or resist the passage of smoke. Dampers used to resist the passage of fire are called fire dampers. Dampers used to control the passage of smoke are called smoke dampers. Fire dampers and smoke dampers can be of multi-blade or curtain construction, as shown in Figure 2.13.

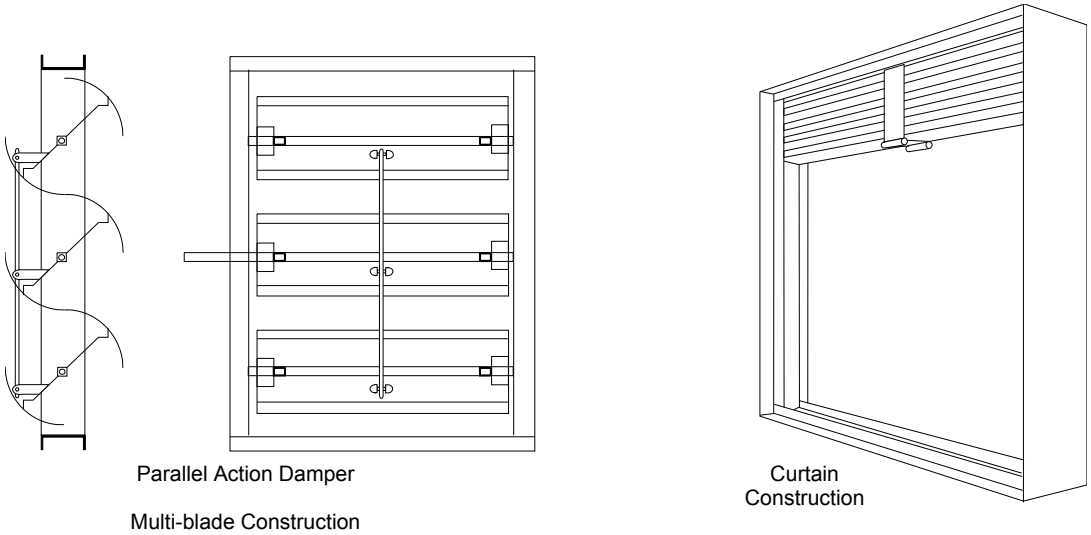

Figure 2.13 Damper Types

Fire Dampers. Fire dampers in the United States are usually constructed and labeled in accordance with standard UL 555 (UL 1990a). Generally, fire dampers, whether multi-blade or curtain type, are held open by a fusible link that comes apart in a fire situation. Multi-blade dampers are usually spring loaded so when the fusible link is broken the spring initiates the closing action. Curtain dampers can be closed by spring activation or by gravity once the fusible link is broken.

Smoke Dampers. Smoke dampers in the United States are usually constructed and classified for leakage in accordance with standard UL 555S (UL 1983). UL 555S contains requirements for leakage-rated dampers intended for use in HVAC systems. Smoke dampers are classified as 0, I, II, III, or IV based on the amount of leakage they allow. See Table 2.2 for the maximum leakage rates allowed for each classification. Additionally, each classification is rated for ambient or elevated temperatures of 250°F or higher in increments of 100°F.

Classification	Leakage (cfm/ft²)			
	at 1.0 in. H_2O	at 4.0 in. H_2O	at 8.0 in. H_2O	at 23.0 in. H_2O
0	0	0	0	0
I	4	8	11	14
II	10	20	28	35
III	40	80	112	140
IV	60	120	168	210

Table 2.2 Smoke Damper Classifications

Class 0 smoke dampers (zero leakage) are usually used in nuclear power plants or similar situations where absolute containment is required. Classes I, II, III, and IV are usually acceptable for smoke control applications in other types of buildings.

2.4.2 Control Equipment

Fire Alarm Control Panel (FACP). If necessary, the FACP and related equipment should work in cooperation with the smoke control system and not counteract its operation. Normally, detection of a fire by a smoke detector will cause the activation of the smoke control system. Since the detector is usually controlled and monitored by the FACP, some communication between the FACP and the smoke control system may be necessary.

Firefighter's Smoke Control Station (FSCS). The FSCS usually provides the control and annunciation to a particular smoke control system. Most smoke control systems have an automatic mode that will function upon initial detection of a fire. However, the FSCS must provide full monitoring and manual override control capability for all smoke control systems and equipment. The FSCS should also have the highest priority control over all smoke control systems and equipment.

2.4.3 Initiating Devices

Smoke Detectors. The initiation of a smoke control system is usually caused by the detection of fire conditions from some form of initiating device. These devices can include smoke detectors, heat detectors, and waterflow switches. Smoke detectors, whether photoelectric or ionization type detectors, if properly installed and maintained can provide proper detection of smoke to initiate the activation of the smoke control system. However, activation of one smoke detector may not be sufficient cause to activate the smoke control system. A combination of two detectors (both active) in a particular smoke zone may provide better evidence that the smoke control system should be activated.

Thermal type heat detectors and water flow switches may provide proper detection of a fire, but more often than not, a fire is already in full swing by the time these devices are activated. Although activation of the smoke control system is essential by the time these devices are activated, it would be wise to ensure that the smoke control system is operational before these conditions present themselves.

Duct detectors should not be used for activation of the smoke control system because smoke can migrate away from the fire area into ducts in other areas causing the smoke control system to pressurize and depressurize the wrong areas.

Manual Pull Station. Manual pull stations should not be used for the activation of zoned smoke control systems. A pull station does not give any specific indication of the fire's location. For instance, a person could activate a first floor pull station when evacuating the building because of a fire on the third floor. A zoned smoke control system should not be activated as a result of this pull station because the smoke control system would be pressurizing and depressurizing the wrong areas. However, a stairtower pressurization system or an elevator hoistway system could be activated in order to limit the movement of smoke.

2.5 Smoke Control System Types

A smoke control system must be designed to inhibit the flow of smoke into exit passageways, or other similar areas of the building. Such systems must control the migration of smoke to maintain tenable conditions, but it should not be expected that such areas would be completely free of smoke. Smoke control systems must be engineered with the occupants and building design in mind. Additionally, the smoke control system design should be coordinated with other life safety systems so that they complement each other.

A smoke control system, if properly installed and programmed in accordance with the documents listed in Section 1, “About This Manual”, should provide the following controls:

- Help maintain a tenable environment in evacuation routes during the time required to evacuate people from the area.
- Help restrict the movement of smoke from the fire area.
- Help provide conditions in non-smoke areas that will enable fire officials to conduct search and rescue operations and to find and combat the fire.
- Assist in protecting life and property.

Smoke control system types and implementations are shown in Figure 2.14. This flow chart shows that a smoke control system can be a dedicated or non-dedicated system. Once that commitment is made, any combination of protection schemes can be implemented. For instance, the user can select a dedicated system which employs both shaft protection and floor protection where a compensated stairtower pressurization system and zoned smoke control are used.

Definitions are given below for dedicated and non-dedicated systems, shaft and floor protection. Detailed explanations of Stairtower Pressurization, Elevator Hoistway, and Zoned Smoke Control Systems follow the definitions.

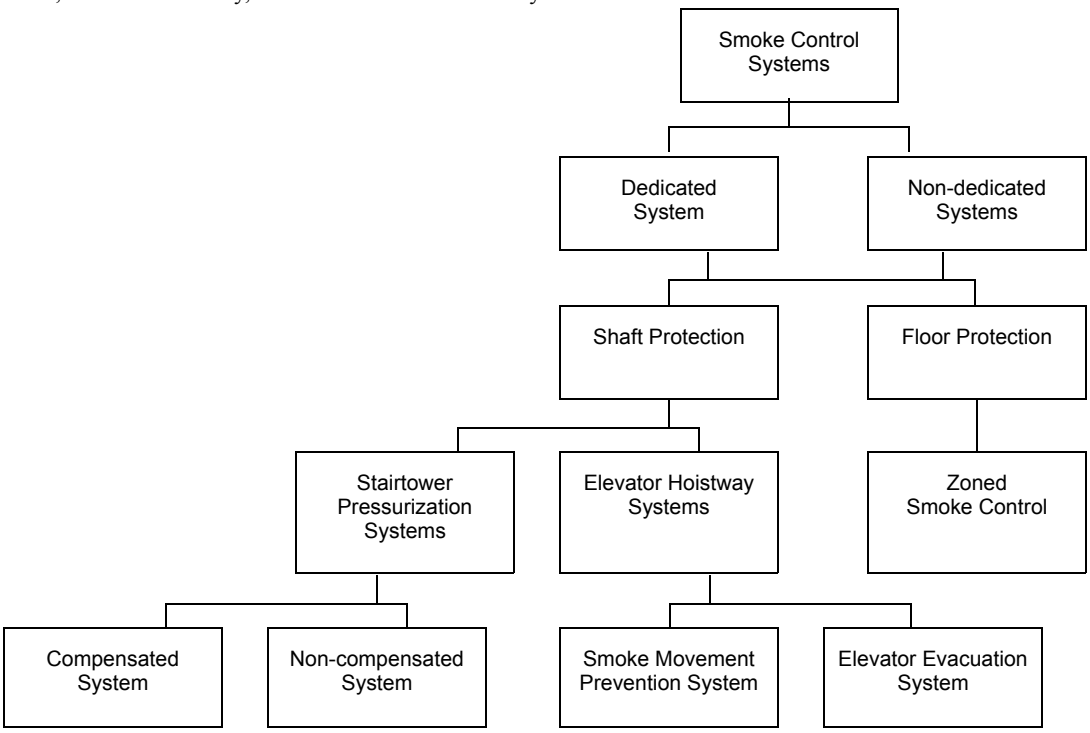

Figure 2.14 Smoke Control System Types and Implementations

Basic System Descriptions

Dedicated Smoke Control Systems. Dedicated smoke control systems are designed for the sole purpose of controlling smoke within a building. The equipment is not linked to building HVAC controls. This is accomplished by forming a system of air movement separate and distinct from the building's HVAC system. Dedicated systems only operate to control the flow of smoke, and may use pressurization or airflow as the control method.

Non-dedicated Smoke Control Systems. Non-dedicated smoke control systems share components with other air moving equipment. When the smoke control mode is activated, operation of the building's air-moving equipment changes in order to accomplish the objectives of the smoke control design. Non-dedicated systems may use pressurization or airflow as the control method.

Shaft Protection. Shaft protection provides for smoke movement in stairtowers and elevator hoistways in either a dedicated or non-dedicated system environment. It is accomplished through stairtower pressurization systems and elevator hoistway systems, described in 2.5.2 and 2.5.3.

Floor Protection. Floor protection systems limit smoke that flows through shafts and cracks in floors or partitions in either a dedicated or non-dedicated system environment. If this smoke is not controlled, its movement between floors can damage property and threaten life in locations remote from the fire. Floor protection is implemented by utilizing variations of zoned smoke control, which is designed to limit this type of smoke movement and described more fully in 2.5.3.

2.5.1 Stairtower Pressurization Systems

Stairtower pressurization systems are used to provide a tenable environment within the stairtower in the event of a building fire. A pressurized stairtower must maintain a pressure difference across a closed stairtower door to limit the migration of smoke. Stairtower pressurization can be accomplished with one of two systems - Noncompensated or Compensated.

Noncompensated System. A Noncompensated system injects air from outside the building into the stairtower with a single-speed fan, keeping the pressure in the stairtower constant with all doors closed. If one or more of the doors in the stairtower are opened, the pressure difference will decrease.

Compensated System. A Compensated system adjusts the pressure in the stairtower based on the combination of doors that are opened and closed, thus maintaining a constant pressure difference throughout the stairtower. This is accomplished by either modulating supply airflows or by relieving excess pressure from the stairtower.

Single Injection

A single-injection system supplies air for pressurization at one location in the stairtower, usually at the top as shown in Figure 2.15a. One of the main concerns with single-injection systems is that the pressurization of the stairtower could fail when a few doors near the supply fan are open. The supply air being injected into the stairtower for the purpose of pressurization could be lost through these openings, thus preventing the pressure differences necessary to limit the movement of smoke. For this reason it is recommended that single injection systems be used in buildings that are eight stories or less.

Single-injection systems can also have supply air injected from the bottom of the stairtower, but the same failure can occur when the exterior door is opened. The supply air can flow directly out the open doorway preventing pressurization of the stairtower. It is recommended that supply air inlets be located at least one floor above or one floor below exterior doors.

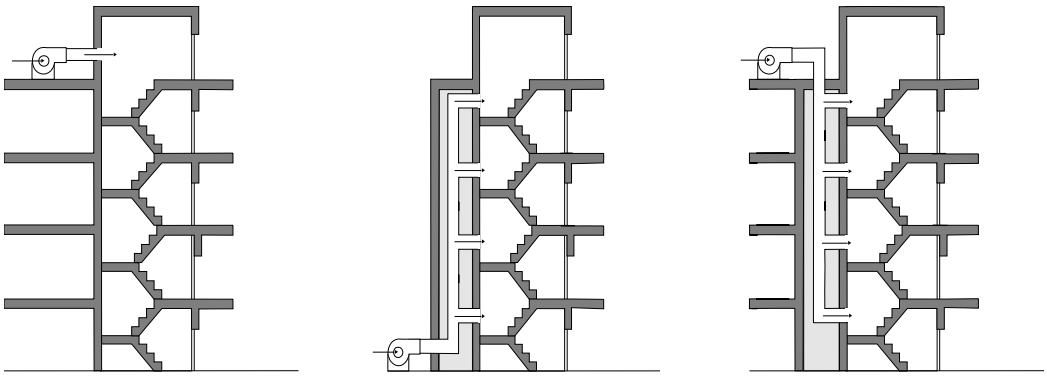

Figure 2.15a Figure 2.15b Figure 2.15c

Figure 2.15 Single and Multiple Injection Staircase Pressurization Systems

Multiple Injection

Multiple-injection systems provide several supply inlets distributed over the height of the staircase, as shown in Figure 2.15b and Figure 2.15c, thereby overcoming the limitations of single-injection systems. Multiple-injection systems can be built with supply air injection points at each floor. Although this would overcome the problem associated with single-injection systems, it may be unnecessary. An acceptable distance for spacing of inlets is three floors. However, spacing of more than three floors can be used as long as the designer determines that the loss of pressurization air through a few open doors does not lead to loss of staircase pressurization.

Compartmentalization

Compartmentalization, used as an alternative to multiple injection, involves dividing the staircase into a number of sections, as shown in Figure 2.16. The staircase is divided in sections of one to eight floors each, where each compartment is separated from the other by walls and doors that are normally closed. Each compartment would also have at least one supply air injection point. Compartmentalization is used for staircases that would normally be too tall for proper pressurization. However, staircases which use compartmentalization require a larger floor area to accommodate the walls and doors that separate the compartments. Another drawback for compartmentalization occurs when the doors between the sections are open. This would result in insufficient pressures to limit the movement of smoke. For this reason, compartmentalization is not recommended for densely populated buildings where total evacuation is planned for the stairwell.

Vestibules

A vestibule is a small room leading into another room, or in this case a stairwell. For the purpose of smoke control, there would be a door leading into the vestibule and a door leading from the vestibule to the staircase. Since the possibility of both doors being open is smaller than if only one door were present, the possibility of smoke entering the staircase and the possibility of pressurization air escaping into the building would be reduced. However, an evacuation analysis should be performed to determine the likelihood of both doors being open simultaneously. The vestibule can either be pressurized or not pressurized.

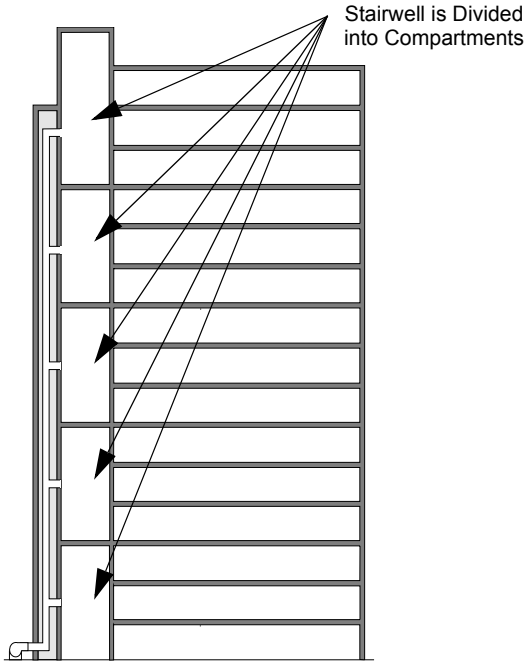

Figure 2.16 Compartmentalization of a Pressurized Staircase

2.5.2 Elevator Hoistway Systems

Elevator hoistways have been known to adversely contribute to the movement of smoke throughout a building. This is due mainly to the fact that elevator doors are not tight fitting and elevator hoistways usually have openings or vents at the top. In addition to these factors, the major contributor to smoke movement in an elevator hoistway is the stack effect of the building.

There are two categories of elevator smoke control - smoke control for evacuation via the elevators and smoke control for prevention of smoke movement. Smoke control for the prevention of smoke movement is intended to prevent the migration of smoke to other floors by way of the elevator shaft. Smoke control for elevator evacuation is intended to provide a safe means of egress in the event of a fire. This would include not only smoke protection, but fire protection and any other features necessary to make the elevator safe for fire evacuation.

There are several ways of accomplishing elevator smoke control:

- Exhausting smoke from the fire floor
- Pressurizing elevator lobbies
- Constructing smoketight elevator lobbies
- Pressurizing elevator hoistways

NOTE: For systems implementing elevator smoke control, the open vent at the top of the hoistway should be eliminated.

Prevention of Smoke Movement Systems

These types of systems are usually designed to supply air to a shaft, producing pressure differences sufficient to prevent the flow of smoke into the elevator hoistway in the event of a fire, as shown in Figure 2.17. During a fire condition for this type of system, elevator cars should be taken out of normal service and automatically returned to the ground floor (or an alternate floor if the fire is detected on the ground floor).

Elevator Evacuation

Most elevator systems do not provide the proper protection necessary for evacuation in the event of a fire. The question of using elevators for the purpose of fire evacuation has resulted in many concerns, some of which are listed below:

- While waiting for the elevator during a fire condition, occupants may be exposed to fire, smoke, or developing panic.
- Elevators could stop at floors involved in fires unnecessarily, exposing occupants to fire and smoke.
- Elevators cannot start until the doors are closed. In a fire situation, large numbers of people trying to crowd into an elevator might make it impossible to start.
- Any power failure due to fire or water damage could render elevators inoperable, possibly trapping occupants between floors.

Therefore, an elevator system used for fire evacuation must have the following requirements:

- Elevator control must ensure safe efficient evacuation.
- Reliable electrical power must be supplied.
- Elevator controls, control wiring, and electrical power must be protected from fire or water damage.
- Elevator lobbies, hoistways, and machinery rooms must be protected against fire and smoke.

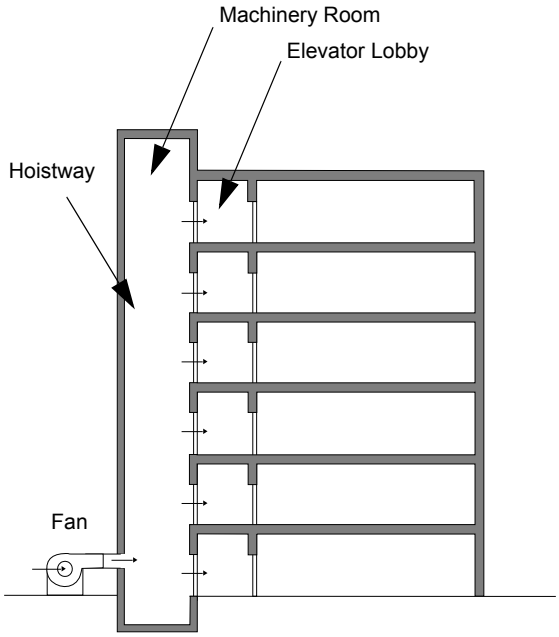

Figure 2.17 Elevator Smoke Control Using Shaft Protection

Smoke control systems for elevator evacuation must provide protection for elevator lobbies, elevator hoistways and elevator machinery rooms. During an evacuation that uses the elevators, building occupants must be protected in the elevator lobby while waiting for the elevator. Another area that needs to be protected is the elevator machinery room to prevent damage to the elevator controls. Figure 2.17 shows an elevator hoistway that is being pressurized and as a result it indirectly pressurizes the elevator lobbies and machinery room.

An alternate way to achieve lobby protection is direct pressurization of the elevator lobbies, as shown in Figure 2.18. Direct pressurization of the lobbies tends to provide better protection for the lobbies because higher pressures in that area can be achieved. The higher pressure would better protect the lobbies against small amounts of smoke which may enter the area.

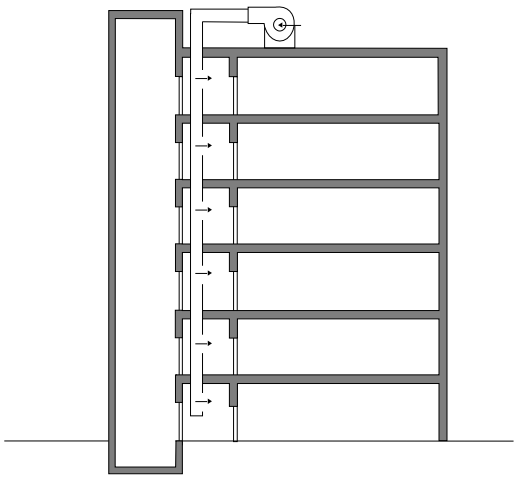

Figure 2.18 Elevator Lobby Pressurization

Another mechanism that can be used along with hoistway pressurization is exhaust of the fire floor, as shown in Figure 2.19. This is achieved by utilizing the return air ductwork of the HVAC system. When a fire is detected, the elevator hoistway is pressurized, all dampers in the return ductwork for the nonsmoke zones must be closed, the damper for the smoke zone must be opened, and the exhaust fan must be turned on.

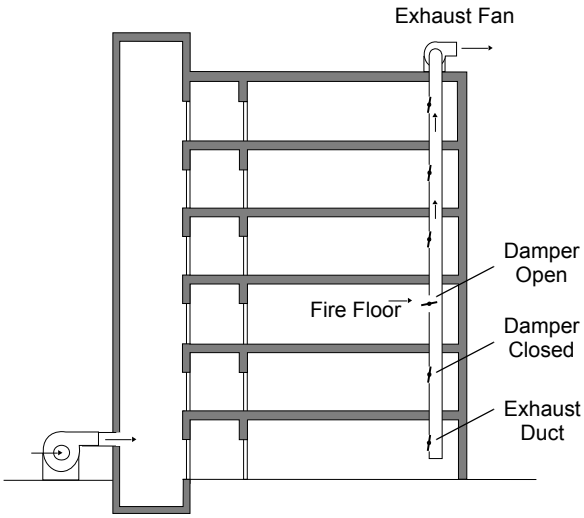

Figure 2.19 Elevator Smoke Control with Fire Floor Exhaust

2.5.3 Zoned Smoke Control Systems

Buildings can usually be divided into a number of smoke control zones where each zone can be separated from the smoke zone to prevent the movement of smoke. The smoke control zone boundaries are usually partitions, floors, and doors that can be closed. Often each floor of a building is chosen as a smoke control zone boundary. However, a smoke control zone can consist of more than one floor, or a floor can contain more than one zone. Also, all nonsmoke zones can be pressurized, or just those surrounding the smoke zone. See Figure 2.20 for some examples of smoke control zone configurations.

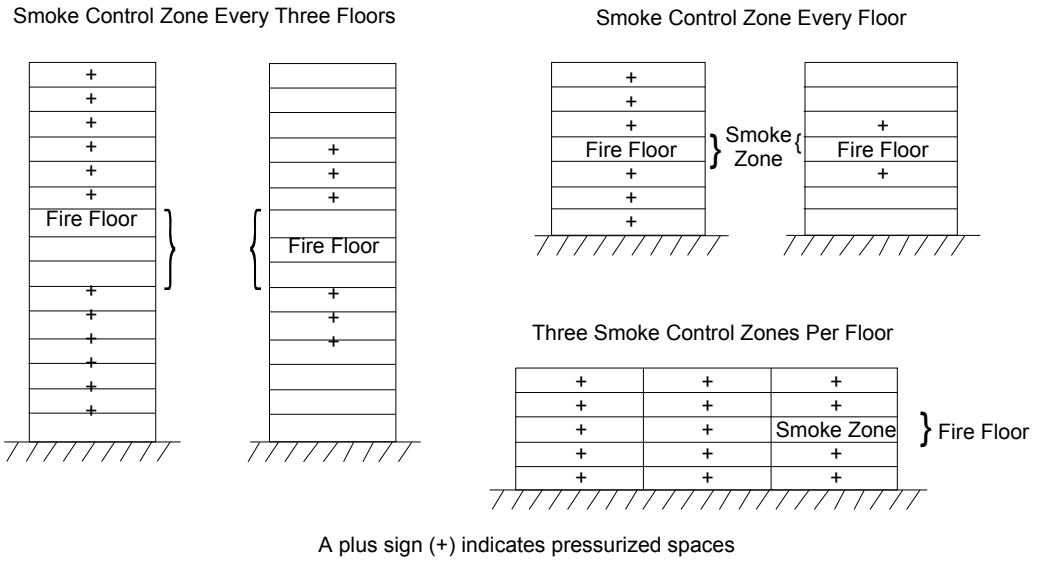

Figure 2.20 Smoke Control Zone Configurations[1]

Zoned smoke control is implemented by venting, or depressurizing, the smoke zone and by either pressurizing all other zones or those zones surrounding the smoke zone. Venting of the smoke zone is important because it prevents significant buildup of pressures as a result of a fire caused by the thermal expansion of gases. Venting can be accomplished through exterior wall vents, smoke shafts, and mechanical exhaust (depressurization).

Exterior Wall Vents

Zoned smoke control using wall vents consists of a vented smoke zone without any fans to aid the exhaust of smoke and adjacent zones that are pressurized. The wall vents in the smoke zone would automatically open when the smoke control system is activated. This method of smoke control should be used for open area floor plans where each floor of the building is defined as a smoke control zone. The vents should be evenly distributed on the walls to counteract the adverse effects of wind.

NOTE: This method should not be used when the floor plan involves many partitions or walls.

Smoke Shafts

Zoned smoke control using smoke shafts consists of one or more vertical shafts and adjacent zones that are pressurized. The vertical shafts are designed to be a path for smoke movement from the smoke zone to the exterior of the building. The shafts can serve one floor, many floors, or one shaft can serve all floors of a building. Each shaft has an opening above the roof level and an opening on each floor that it serves. Each shaft opening is equipped with a normally closed damper that will open in response to a fire on that particular floor. This method of smoke control should be used for open area floor plans where each floor of the building is defined as a smoke control zone. It is recommended that smoke shafts be located as far away from exit passageways as possible to prevent additional problems for evacuation and fire fighting. Additionally smoke shaft inlets should be located in or near the ceiling because hot smoke usually stratifies near the ceiling.

1. The figure on this page is reprinted with permission from NFPA 92A, Smoke Control Systems, Copyright © 1993, National Fire Protection Association, Quincy, MA 02269. This reprinted material is not the complete and official position of the National Fire Protection Association on the referenced subject which is represented only by the standard in its entirety.

Mechanical Exhaust

Zoned smoke control using mechanical exhaust is very similar to the smoke shaft method and similarly is done in conjunction with pressurization of nonsmoke zones. The driving force of smoke movement for the smoke shaft method is buoyancy. However, when the flow of smoke through the smoke shaft is aided by mechanical fans, the method is known as mechanical exhaust. Mechanical exhaust of the smoke zone can be accomplished through a dedicated exhaust system or by using components of the HVAC system. As with the smoke shaft method, the location of exhaust inlets should be located near the ceiling and as far from exit passageways as possible.

Use of HVAC System

In many instances, the HVAC system, shown in Figure 2.21a, can be used to perform zoned smoke control. The steps necessary to achieve zoned smoke control are listed below:

- Close the damper in the supply duct for the smoke zone.
- Close the dampers in the return duct for all nonsmoke zones.
- If the system has an air recirculation duct, close the recirculation damper.
- Turn on the supply fan and the return fan.

The result of following these steps during a fire condition is illustrated in Figure 2.21b.

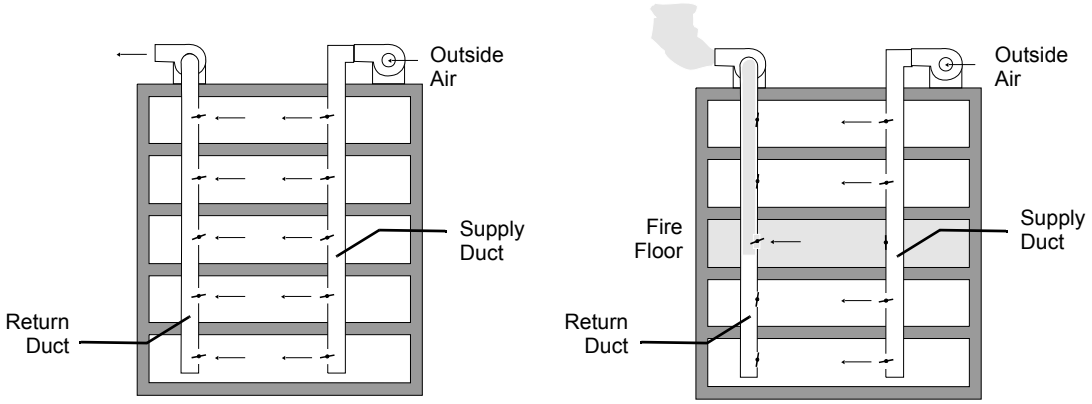

Figure 2.21a Figure 2.21b

Figure 2.21 Zoned Smoke Control Using the HVAC System Normal Operation and Smoke Control Operation

A major concern when using an HVAC system for smoke control is the location of the exhaust outlets and the air intakes. To minimize the probability of smoke feedback into the supply intake, the exhaust outlet must be located as far from the supply intake as possible.

Another factor to take into consideration when using an HVAC system for smoke control is the air recirculation vent. Occasionally, HVAC building systems are designed with the capability to recirculate air through the use of dampers and by connecting the supply and return ducts as shown in Figure 2.22a. During normal operation, the damper in the recirculation duct is partially or completely open to allow air from the building to mix with outside air. For zoned smoke control operation the damper in the air recirculation vent must be tightly closed, as shown in Figure 2.22b, to prevent smoke feedback into the supply air.

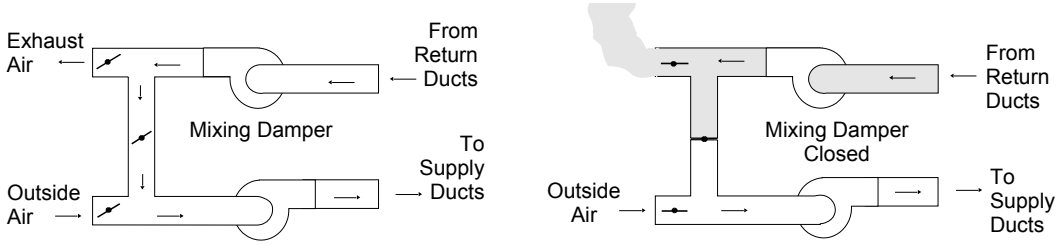

Figure 2.22a Normal Mode Figure 2.22b Smoke Control Mode

Figure 2.22 HVAC System with Recirculation Capability in Normal Mode and Smoke Control Mode

Zoned smoke control can also be accomplished in situations where an HVAC system serves only one smoke control zone. An example would be a three floor building where each floor is a separate smoke control zone that has a separate HVAC system serving each floor. Zoned smoke control can be achieved by putting the HVAC system in the modes listed below:

- **Smoke Zone:** Turn off supply fan, close supply damper, open exhaust damper, turn on return fan
- **Nonsmoke Zone:** Turn off return fan, close return damper, open supply damper, turn on supply fan

2.6 Basic Smoke Control System Operation

Now that the fundamentals of how smoke moves, the basic types of smoke control systems, and the equipment necessary to perform smoke control have been described, we need to know how to utilize these systems to prevent the movement of smoke. This section is used to provide a basic understanding of how the equipment is used to configure and operate a smoke control system for a particular building application.

No matter what type of smoke control system is used, all smoke control systems utilize the operation of fans (turning on or off) and dampers (opening or closing) for the control of smoke. In general, there are only two situations to consider when controlling a fan:

- The capability to turn a fan on, regardless of its current state
- The capability to turn a fan off, regardless of its current state

By combining the above two situations, a third situation can be obtained, the capability of turning a fan on and off. For each of the above situations, you may wish to verify the following:

- When the fan is on
- When the fan is off

Once again by combining the two situations a third results, verifying when a fan is on and when it is off. For a fan or damper to be used in a smoke control system, the system must not only be able to control the device, but it must be able to verify what state it is in (ON/OFF or OPEN/CLOSED). By combining the four basic capabilities shown above, smoke control systems can have nine different scenarios for control of a particular fan. The above argument also applies to the opening and closing of dampers. The full scenarios are explained below:

Scenario 1 The capability to turn a fan off. Verify only when the fan is off.
(The capability to close a damper. Verify when the damper is closed.)

Scenario 2 The capability to turn a fan off. Verify only when the fan is on.
(The capability to close a damper. Verify when the damper is open.)

Scenario 3 The capability to turn a fan off. Verify when the fan is on and when it is off.
(The capability to close a damper. Verify when the damper is open and when it is closed.)

Scenario 4 The capability to turn a fan on. Verify only when the fan is off.
(The capability to open a damper. Verify when the damper is closed.)

Scenario 5 The capability to turn a fan on. Verify only when the fan is on.
(The capability to open a damper. Verify when the damper is open.)

Scenario 6 The capability to turn a fan on. Verify when the fan is on and when it is off.
(The capability to open a damper. Verify when the damper is open and when it is closed.)

Scenario 7 The capability to turn a fan on and off. Verify only when the fan is off.
(The capability to open and close a damper. Verify when the damper is closed.)

Scenario 8 The capability to turn a fan on and off. Verify only when the fan is on.
(The capability to open and close a damper. Verify when the damper is open.)

Scenario 9 The capability to turn a fan on and off. Verify when the fan is on and when it is off.
(The capability to open and close a damper. Verify when the damper is open and when it is closed.)

For example, Scenario 8 is capable of turning a fan on and off, as well as, verifying when the fan is on. Regardless of its current state, this fan can be turned on or off when a fire is detected. Also, verification when the fan is turned on in the response to a fire will occur, usually in the form of an illuminated indicator. When the fan is in its normal state or when it is turned off, no verification in the form of an illuminated indicator takes place.

The following example illustrates how a system of fans and dampers is utilized for smoke control. Figure 2.23 shows two zones of a multiple smoke control zone layout. All the smoke control zones are served by two fans; one fan is used to supply air and the other is used as a return. There are two vents per zone (one supply, one return) and dampers are located on each vent. If a fire should occur, the smoke zone must be depressurized and all other zones must be pressurized. Depressurization of the smoke zone is accomplished by clos-

ing the supply damper (S1), ensuring that the return damper (R1) is open, and turning on the return fan. Pressurization of all other areas is accomplished by closing the return dampers, ensuring that the supply dampers are open, and turning on the supply fan. This example is using zoned smoke control with mechanical exhaust.

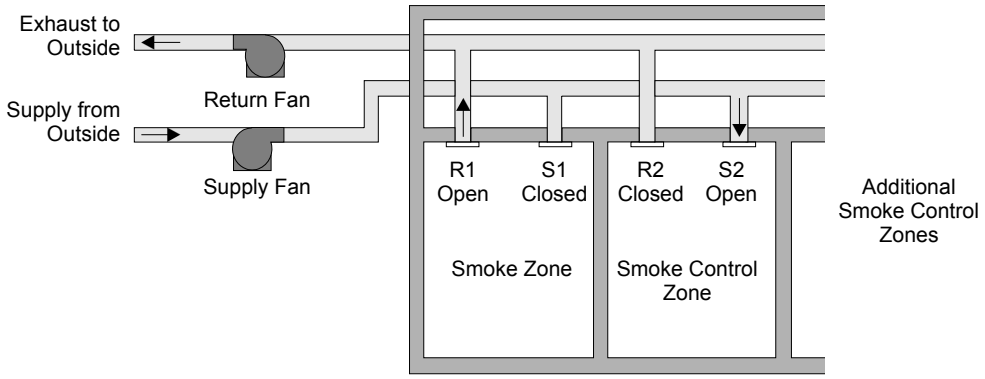

Figure 2.23 Smoke Control Using Fans and Dampers

This example, although very basic, serves as the groundwork for zoned smoke control systems using pressurization and mechanical exhaust.

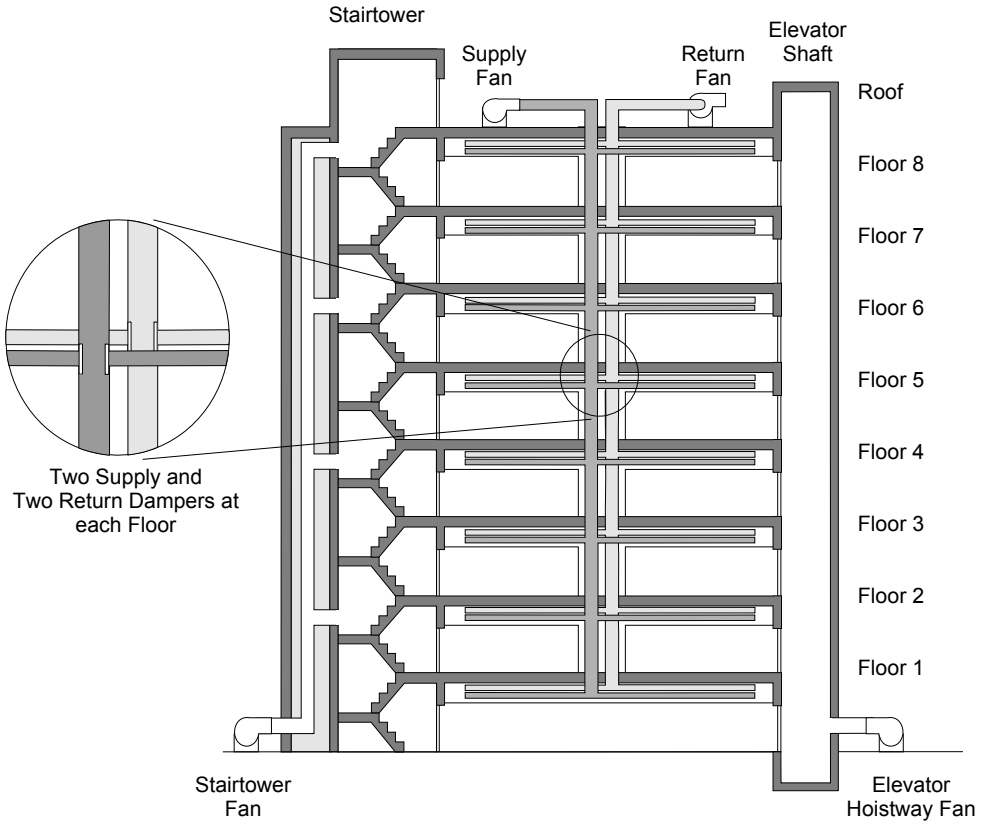

Figure 2.24 Eight Story Building

The building shown in Figure 2.24 is eight stories, where each floor is designated as a smoke control zone. There is also a staircase and elevator shaft to consider. The system depicted here is a dedicated system that will utilize pressurization. The staircase has a multiple injection system and the elevator hoistway will only be pressurized to prevent the migration of smoke (it will not be used for evacuation). All dampers are normally open. When a fire is detected the following must occur:

- Pressurization of the stairwell and elevator shaft
- Pressurization of all non-smoke zones
- Evacuation of the smoke zone

These steps would be accomplished as follows:

1. Turn ON the stairtower and elevator hoistway fans.
2. CLOSE return dampers for all nonsmoke zones. As an example, if the fire event occured on floor 5, the areas specific to this example would be floors 1-4 and floors 6-8. This step would involve the closing of 14 dampers.
3. CLOSE supply dampers for the smoke zone (floor 5). This step would involve the closing of 2 dampers.
4. Turn ON both the supply fan and the return fan.

At this point the smoke control system would be fully operational. Section 3 “The SCS/SCE” gives specific information on accomplishing these steps with the SCS-8/SCE-8 and associated equipment.

When operating as a Protected Premises Control Unit, the ONYXWORKS-WS can be configured for monitoring and control of fire, smoke control, and mass notification devices. Refer to the ONYXWORKS-WS Listing Document LS10050-051NF-E for reference.

Section 3: The SCS/SCE

3.1 Introduction

3.1.1 Hardware Features

The Smoke Control Station (SCS-8) and the optional Smoke Control Expander (SCE-8) are used in conjunction with the following equipment, providing the capability to control and display the status of air handling unit (AHU) fans and dampers.

- An NFS2-3030 FACP, in FSCS or HVAC mode.
- An NFS2-3030, NFS2-640 or NFS-320 FACP with a Network Control Annunciator, in FSCS or HVAC mode.
- An NFS-320 or NFS2-640 FACP, in HVAC mode.
- Legacy systems: The AM2020/AFP1010 Fire Alarm Control Panel (FACP), in FSCS or HVAC mode.
- Legacy systems: The AM2020/AFP1010 FACP and an Intelligent Network Annunciator (INA), in HVAC mode, without manual control.

The Smoke Control Lamp Driver (SCS-8L) and the optional Smoke Control Lamp Driver Expander (SCE-8L) are also used in conjunction with the above equipment. However, unlike the SCS-8/SCE-8, they must be installed in a Custom Graphic Annunciator backbox (see Section 3.7 “SCS-8L/SCE-8L Installation”, for more information).

This manual will refer to the SCS-8/SCE-8 and the SCS-8L/SCE-8L as the SCS/SCE when the information pertains to both versions. Otherwise the information only pertains to the version stated. This table lists abbreviations used in tables and figures in this manual for monitor and control modules..

Term	Code Used in Manual	Part Number	
Control Module, Relay Module	CM	Control modules:	FCM-1, XPC, XP5-C, XP6-C, CMX-1, CMX-2
		Relay modules:	FRM-1, XPR, XP6-R, CMX-1 (relay configuration), CMX-2 (relay configuration)
Monitor Module	MM	FMM-1, FMM-101, FDM-1, XPM, XP5-M, XP10-M, MMX-1, FZM-1	
Note: the FDRM-1 acts as both CM or MM, depending on application.			

Table 3.1 Chart of Abbreviations

One SCS has the capability to control and monitor eight AHU fans or dampers. The SCE is used in conjunction with the SCS, providing the capability to control and monitor 16 AHU fans and dampers. Only one SCE can be used for each SCS and a maximum of 32 pairs can be used with each FACP. With the maximum configuration of 32 pairs, the system has the capability to control and display the status of up to 512 separate AHU fans or dampers.

The SCS/SCE is capable of two modes of operation; Firefighter's Smoke Control Station (FSCS) or Heating, Ventilation, and Air Conditioning (HVAC). In the FSCS mode (not for use with INA, or when smoke control modules are directly connected to an NFS-320 or NFS2-640 EIA-485 circuit), the SCS/SCE has the following capabilities:

- Helps maintain a tenable environment in evacuation routes during the time required to evacuate people from the area.
- Helps restrict the movement of smoke from the fire area.
- Helps provide conditions in non-smoke areas that will help fire officials conduct search and rescue operations and to find and combat the fire.
- Assists in protecting life and property.

In the HVAC mode, the SCS/SCE has the capability of monitoring and controlling the building heating, ventilating and air conditioning. The HVAC mode is not consistent with the UL and NFPA standards for smoke control. This mode should be used for fan shutdown and building heating, ventilating, and air conditioning purposes only.

The SCS/SCE, when used with an AM2020/AFP1010, or NFS-320/NFS2-640 with an NCA-2, or NFS2-3030 with or without an NCA-2, complies with NFPA 90A, 92A, and 92B standards for smoke control and UL smoke control requirements (Category UUKL) for Dedicated and Non-dedicated Systems.

NOTE:
1. Software Part Numbers 73631 and 73845 are not compatible with INA combinations after M2.7.
2. Part #SCSV2.84 is not compatible with FACP/INA combinations prior to M2.8.
3. NFS-320s, NFS2-640s, NFS-640s, NFS2-3030s, NFS-3030s, NCAs and NCA-2s are only compatible with software #SCS2.84 or higher. (They are not compatible with any 73XXX series software versions.)
4. To use the SCS V4.0, NFS2-3030, and/or NCA-2 must be running software V21 or higher.

3.1.2 SCS V4.0 Software Features

This manual describes versions 2.84 and 4.0 of the SCS-8/SCS-8L; the table below specifies which features are available only to version 4.0 and higher.

To use the version 4.0 features, the smoke control station must be connected to NFS2-3030, or NCA-2 running software V21 or higher.

Panel Feature (V21.0)	FSCS Mode A**		FSCS Mode B**
	SCS-8/8L V2.84	SCS-8/8L V4.0	SCS-8/8L V4.0
Independent Switch-group Operation (See Appendix C.2, “Mode B Operation”)	No	No	Yes
Multiple Smoke Control Station	No	Yes	Yes
Pairing	No	Yes	No
Programmable Trouble Timer*	No	Yes	Yes
SCS Logic Equation Operators*	No	Yes	Yes
Enhanced Trouble Reporting*	No	Yes	Yes
*See NFS2-3030/NCA-2 documentation. **See NFS2-3030/NCA-2 documentation for mode setting.			

Table 3.2 SCS Features: V2.84 vs V4.0

3.2 Smoke Control Station (SCS-8)

Each SCS-8 has two rotary decimal switches for addressing and 8 dipswitches for mode configuration (see Figure 3.1). The rotary switches and dipswitches are not on the SCE-8.

Each SCS-8/SCE-8 module has eight independent switch groups that consist of the following (see Figure 3.1):

- Miniature locking toggle switch - three position ON/AUTO/OFF (OPEN/AUTO/CLOSE)
- Four annunciator protocol points (two control and two monitor)
- Green On (Open) LED
- Yellow Off (Closed) LED
- Amber Trouble LED

Each SCS-8/SCE-8 also has two LEDs and one momentary switch with the following functions (see Figure 3.1):

- Green All Auto LED
- Amber Manual
- Local Acknowledge/Lamp Test momentary switch

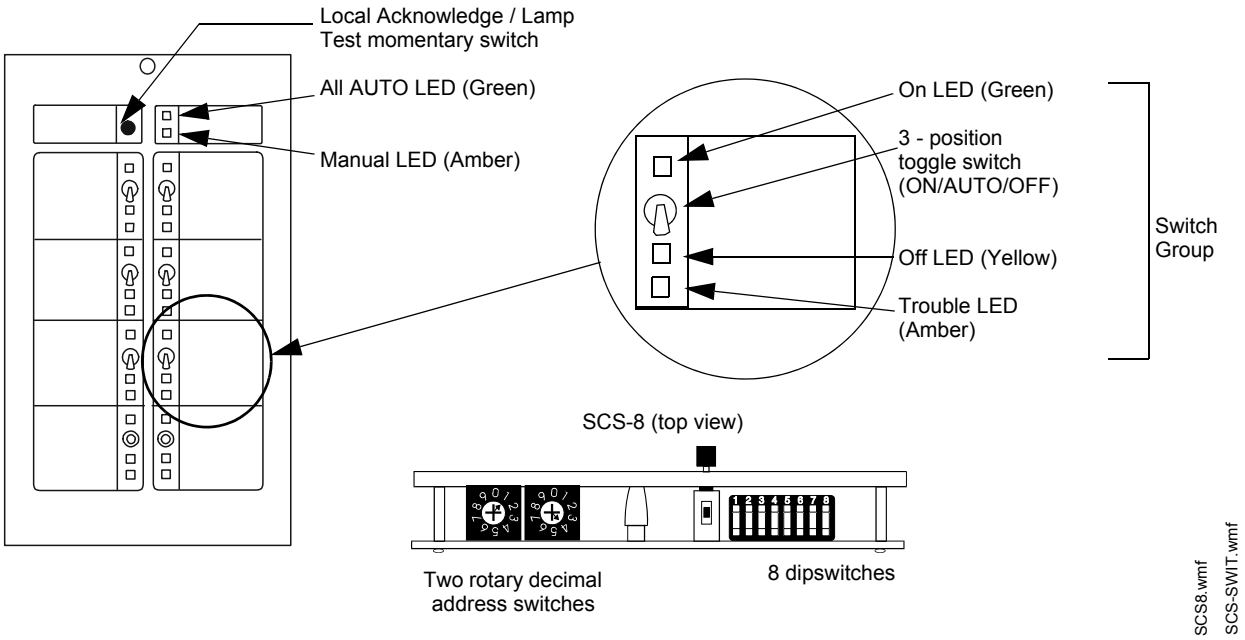

Figure 3.1 SCS-8

3.3 Smoke Control Lamp Driver (SCS-8L)

Each SCS-8L has two rotary decimal switches for addressing and 8 dipswitches for mode configuration (see Figure 3.2). The rotary switches and dipswitches are not on the SCE-8L.

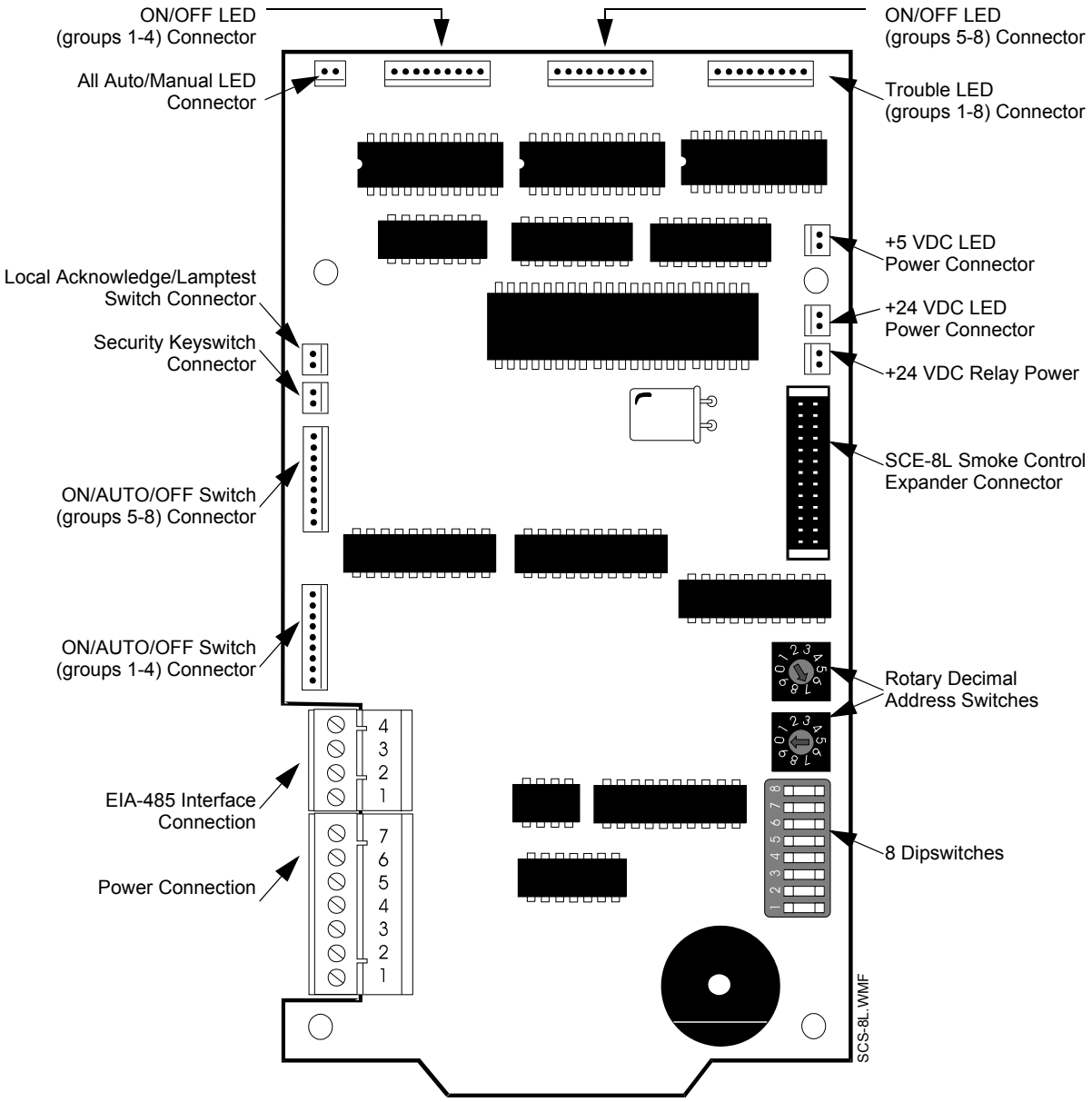

Figure 3.2 SCS-8L

Each SCS-8L/SCE-8L module has eight independent switch groups that consist of the following:

- Contacts for three position switch (ON/AUTO/OFF)
- Four annunciator protocol points (two control and two monitor)
- Contact for an On LED (Green)
- Contact for an Off LED (Yellow)
- Contact for a Trouble LED (Amber)

Each SCS-8L/SCE-8L also has contacts for two LEDs and one momentary switch with the following functions:

- Contact for an All Auto LED (Green)
- Contact for a Manual LED (Amber)
- Contact for a Local Acknowledge/Lamp Test momentary switch

3.3.1 Inventory

The SCS-8* The SCS-8 Smoke Control Station provides the capability to control and display the status of eight AHU fans and dampers. The SCS-8 is capable of two modes of operation, FSCS for the control of smoke and HVAC for the control of heating, ventilating and air conditioning.

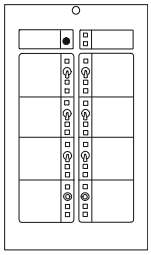

SCS8.wmf

The SCE-8. The SCE-8 Smoke Control Expander expands the SCS-8 providing the capability to control and display an additional eight AHU fans and dampers. Includes an expander ribbon cable for connection to the SCS-8.

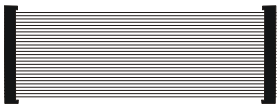

Expander
Ribbon Cable
SCE-8 75073
SCE-8 75120

SCEexpanderribn cbl.wmf

The SCS-8L* The SCS-8L Smoke Control Station provides the capability to control and display the status of eight AHU fans and dampers via connection to a custom graphic annunciator. Graphic annunciators are custom made by a multitude of companies. For information on custom graphic annunciators, refer to Section 3.7 “SCS-8L/SCE-8L Installation”. The SCS-8L is capable of two modes of operation: FSCS for the control of smoke and HVAC for the control of heating, ventilating and air conditioning.

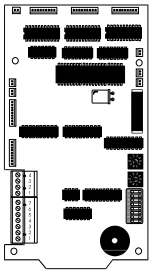

SCS-8L.wmf

The SCE-8L. The SCE-8L Smoke Control Expander expands the SCS-8L providing the capability to control and display an additional eight AHU fans and dampers via connection to a custom graphic annunciator. Includes an expander ribbon cable for connection to the SCS-8L.

The LDM-R32. The LDM-R32 Relay Expander Module provides the SCS-8L/SCE-8L with 32 dry Form-A (normally open) contacts. The relay module serves as a slave to the particular SCS-8L it is connected to. Instead of driving lamps or LEDs, the ON, OFF, or TROUBLE signals from the SCS-8L/SCE-8L module are used to activate the relays on the LDM-R32.

The SCS-8L-CBL24 and SCS-8L-CBL48. Cable sets for connecting SCS-8/8L and SCE-8/8L outputs to lamps or LEDs are provided through the optional SCS-8L-CBL24 (24" long) and SCS-8L-CBL48 (48" long) assemblies. Each cable has a plug on one end for connection to the annunciator module and stripped and tinned ends on the other end of the assembly. Each cable supports eight output pins. The SCS-8L-CBL24 and SCS-8L-CBL48 are cable sets that provide several cables, sufficient for most applications.

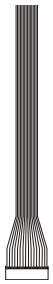

cbl2448.wmf

3.4 Preliminary SCS-8/SCE-8 Design Considerations

A smoke control system must not only be able to control a fan or damper, but it must also be able to verify what state the fan or damper is in (ON/OFF or OPEN/CLOSED). Following is an explanation of how the SCS-8 controls and monitors a fan or damper in conjunction with the FACP/INA/Network Control Annunciator.

NOTE:
1. Software Part Numbers 73631 and 73845 are not compatible with INA combinations after M2.7.
2. Part #SCSV2.84 is not compatible with FACP/INA combinations prior to M2.8.
3. NFS-320s, NFS2-640s, NFS-640s, NFS2-3030s, NFS2-3030s, NCAs and NCA-2s are only compatible with software #SCS2.84 or higher. (They are not compatible with any 73XXX series software versions.)
4. To use the SCS V4.0, NFS2-3030, and/or NCA-2 must be running software V21 or higher.

3.4.1 Related Documentation

To obtain a complete understanding of the potential features of related products, or to become familiar with functions in general, make use of the documentation listed in Section 1.3 “Supplemental Documentation” at the front of this book.

3.4.2 Fan and Damper Operation with the SCS-8

Control of a fan or a damper is achieved through use of a control module (CM). Normally, control modules are used to activate and deactivate notification appliances. When used with the SCS-8 they control the ON/OFF state of a fan or the OPEN/CLOSED state of a damper. Monitoring the state of a fan or a damper is accomplished through the use of a monitor module (MM). Normally, monitor modules are used to monitor the state of a particular device. When used with the SCS-8 they are used to monitor the ON/OFF state of a fan or the OPEN/CLOSED state of a damper. Figure 3.3 shows a general layout of the components necessary to control and monitor a fan.

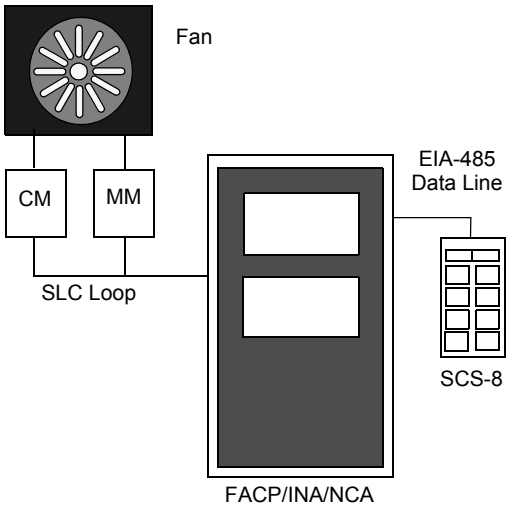

Figure 3.3 Controlling and Monitoring of a Fan Using Notifier Components

The control and monitor modules are controlled by the FACP. The SCS-8 communicates with the FACP over the EIA-485 data line. Each SCS-8 must be set for a specific address on the EIA-485 circuit, one that is different from all other device addresses on the EIA-485 data line. There are 32 valid EIA-485 addresses in the FACP, numbered 1-32, and each address provides 64 protocol points for the purpose of communication with the FACP. The SCS-8 monitors and controls the control and monitor modules through the FACP by using the 64 points.

Each switch group on the SCS-8 is responsible for controlling and monitoring one fan or damper. Four of the 64 available EIA-485 protocol points are used for this purpose. For each of these four protocol points, an appropriate control or monitor module must be present at the fan or damper.

Each switch group on an SCS/SCE consists of two LEDs for annunciation of fan or damper status, one LED for annunciation of trouble conditions, and an ON/AUTO/OFF (OPEN/AUTO/CLOSED) three-position switch for control of a fan or damper (through the control and monitor modules). The control of the control and monitor modules depends on the setting of the three position switch.

If the switch is in the AUTO position and there is an alarm condition in the FACP, the control and monitor modules will function according to the automatic programming in the FACP.

If the switch is in the ON (OPEN) position the SCS-8 sends a signal over the EIA-485 that overrides the automatic programming, ensuring the ON/OPEN condition of the fan or damper.

If the switch is in the OFF (CLOSED) position, the SCS-8 sends a signal over the EIA-485 overriding the automatic programming, ensuring the OFF/CLOSED position of the fan or damper.

3.4.3 Design Considerations

A primary concern in the design of a smoke control system is the type of system that will be used. Much thought should be given to the building layout and occupancy. Some common questions include:

- What method of smoke control will be used to control the movement of smoke? (pressurization recommended)
- How many smoke control zones are there?
- Will existing HVAC equipment be used?
- Is there going to be pressurization in all non-fire zones or just surrounding zones?
- Are there stairwells and/or elevator shafts that need to be pressurized?

Once these questions are answered, the following information must be compiled prior to installation. Each step will be explained in detail on the pages that follow.

1. Determine the number of fans and dampers that need to be controlled and monitored for smoke control.
2. Determine capabilities required for each fan and damper. Select a corresponding switch group type for each fan and damper.
3. Determine the switch group type configurations needed on the SCS/SCE.
   a) Determine the dipswitch setting for the particular configurations.
   b) Determine number of SCSs/SCEs required and an address for each.
   c) Determine the individual point numbers used for each switch used.

The worksheets in Appendix B.4 on page 190 can help organize the information referenced above.

3.4.4 Selecting Fan and Damper Capabilities

After determining the number of fans and dampers required for the smoke control system, the designer must decide what capabilities each fan and damper should have. The designer must determine which fans need on and/or off control, which dampers need opened and/or closed control, which fans need verification of the on and/or off state, and which dampers need verification of the open and/or closed state.

Usually a fan does not need the capability of separate verification of its on/off state (requiring two monitor modules). One monitor module is capable of determining when the fan is on and when it is off.

3.4.5 Switch Group Type

Each controlled/monitored fan or damper has one associated switch group on the SCS/SCE. Each switch group has four EIA-485 protocol points used to control and monitor a fan or damper. There are four stand-alone capabilities available for controlling and monitoring fans and dampers for smoke control:

- The capability to turn a fan on (open a damper), regardless of its current state
- The capability to turn a fan off (close a damper), regardless of its current state
- Monitor and verify when the fan is on (or when damper is open)
- Monitor and verify when the fan is off (or when damper is closed)

If a fan or damper requires all four of these capabilities, then two control modules and two monitor modules must be connected to the device and one protocol point would be responsible for each of the four capabilities. A control module is assigned either an ON/OPEN or an OFF/CLOSED capability to control a fan or damper.

ON/OPEN Control ($CON_{ON/OP}$) - turn a fan on (or open a damper)

OFF/CLOSED Control ($CON_{OFF/CL}$) - turn a fan off (or close a damper)

A monitor module is assigned an ON/OPEN or an OFF/CLOSED capability for verification of the state of a fan or damper.

ON/OPEN Verification ($VER_{ON/OP}$) - verify when a fan is on (or verify when a damper is open)

OFF/CLOSED Verification ($VER_{OFF/CL}$) - verify when a fan is off (or verify when a damper is closed)

These four capabilities, now referred to as **$CON_{ON/OP}$**, **$CON_{OFF/CL}$**, **$VER_{ON/OP}$** and **$VER_{OFF/CL}$**, can be applied to the nine scenarios as shown in Table 3.3. These nine combinations represent all the capabilities a fan or damper can have for smoke control. The capabilities of each fan or damper must match one of these nine scenarios. Each scenario is referred to as a switch group type.

1	**$CON_{OFF/CL}$** and **$VER_{OFF/CL}$**	Turn a fan off (close a damper) and verify when the fan is off (damper closed)
2	**$CON_{OFF/CL}$** and **$VER_{ON/OP}$**	Turn a fan off (close a damper) and verify when the fan is on (damper open)
3	**$CON_{OFF/CL}$**, **$VER_{ON/OP}$** and **$VER_{OFF/CL}$**	Turn a fan off (close a damper) and verify when the fan is on and off (damper open and closed)
4	**$CON_{ON/OP}$** and **$VER_{OFF/CL}$**	Turn a fan on (open a damper) and verify when the fan is off (damper closed)
5	**$CON_{ON/OP}$** and **$VER_{ON/OP}$**	Turn a fan on (open a damper) and verify when the fan is on (damper open)
6	**$CON_{ON/OP}$**, **$VER_{ON/OP}$** and **$VER_{OFF/CL}$**	Turn a fan on (open a damper) and verify when the fan is on and off (damper open and closed)
7	**$CON_{ON/OP}$**, **$CON_{OFF/CL}$** and **$VER_{OFF/CL}$**	Turn a fan on and off (open and close a damper) and verify when the fan is off (damper closed)
8	**$CON_{ON/OP}$**, **$CON_{OFF/CL}$** and **$VER_{ON/OP}$**	Turn a fan on and off (open and close a damper) and verify when the fan is on (damper open)
9	**$CON_{ON/OP}$**, **$CON_{OFF/CL}$**, **$VER_{ON/OP}$** and **$VER_{OFF/CL}$**	Turn a fan on and off (open and close a damper) and verify when the fan is on and off (damper open and closed)

Table 3.3 FSCS Mode Switch Group Types

Example: If a fan must have the capability of on and off control, as well as verification of when the fan is on, you would need switch group type 8.

3.4.6 Switch Group Type Configuration

Once the switch group types have been selected, they must be configured for the SCS/SCE. The configuration of switch group types will determine the number of SCS/SCE modules required for the system. The configuration layouts must be selected from pre-chosen formats shown in the tables in Section 3.8 “Configuration”. Although the configurations in these tables are shown with an SCE, the configuration is the same for the SCS if an SCE is not used.

There is more than one way to comply with the pre-chosen formats for switch group type configuration. Following are some recommendations for configuring switch group types:

- Since the configurations are in groups of 16, 8, or 4, break up the total number of a common switch groups into the most convenient size.
  - If you have 16 of the same switch group type, all 16 can be configured to one SCS/SCE pair.
  - If you have 8 of the same switch group type, all 8 can be configured to one SCS.
  - If you have two different switch group types of 8 each, they can be combined onto one SCS/SCE pair as long as the combination of the two switch group types can be found in the tables in Section 3.8 “Configuration”.
  - If you have two different switch group types of 4 each, they can be combined onto one SCS as long as the combination of the two switch group types can be found in the tables in Section 3.8 “Configuration”.
  - If you have less than 16, 8, or 4 common switch group types, you can still use the above recommendations with some of the switch groups unused. For instance, if you have 15, you can put all 15 on one SCS/SCE pair with one switch group unused.
- It may be desirable to keep fans associated with particular dampers on the same SCS/SCE pair.
  - If you have 8 fans and 8 dampers of the same switch group type, they can be combined onto one SCS/SCE pair.

  - If you have 8 fans and 8 dampers of two different switch group types, they can be combined onto one SCS/SCE pair as long as the combination of the two switch group types can be found in the tables in Section 3.8 “Configuration”.
  - If you have 4 fans and 4 dampers of two different switch group types, they can be combined onto one SCS as long as the combination of the two switch group types can be found in the tables in Section 3.8 “Configuration”.
- It is also possible to have fans or dampers with two different switch group types on the same SCS or SCS/SCE pair as long as the combination of the two switch group types can be found in the tables in Section 3.8 “Configuration”.

  For example, if you have 12 type 7 fans, 4 type 1 fans, 12 type 5 dampers, and 4 type 2 dampers, they could be configured in any one of the following ways:
  - All 12 type 7 fans could be configured for one SCS/SCE pair, with four switches unused. All 12 type 5 dampers could be configured for a second SCS/SCE pair, with four switches unused. The four type 1 fans could be configured for one SCS with four switch groups unused. The four type 2 dampers could be configured for a second SCS with four switch groups unused.
  - Eight type 7 fans and eight type 5 dampers could be configured on one SCS/SCE pair. Four type 7 fans and four type 5 dampers could be configured on one SCS. Four type 1 fans and four type 2 dampers could be configured on a second SCS.
  - Eight type 7 fans could be configured on one SCS. Eight type 5 dampers could be configured for a second SCS. Four type 7 fans and four type 1 fans could be configured on a third SCS. Four type 5 dampers and four type 2 dampers could be configured on a forth SCS.

These are only a few examples of how fans and dampers could be configured for the SCS/SCE. The layout and configuration of the SCS/SCEs should be fully planned before installation begins. When the layout and configuration design of the SCSs and SCE has been finalized, note the dipswitch setting for each SCS, which is also located in the tables in Section 3.8 “Configuration”. The explanation of dipswitch settings is located in Table 3.4.

3.4.7 Dipswitch Setting

The eight dipswitches are used to control the function of the SCS⁄SCE. The dipswitches perform the functions as listed in Table 3.4, where: switches 1-5 control the combinations of switch group types; switch 6 controls whether the SCS⁄SCE operates in the FSCS or the HVAC mode; switch 7 selects Dedicated or Non-dedicated System operation when in the FSCS mode or enables/disables the Control-By-Event lockout when manual operation is initiated in the HVAC mode; and switch 8 installs or removes the end-of-line termination resistor.

SWITCH NUMBER	DESCRIPTION	FUNCTION	SWITCH LOCATION & POSITION
1 to 5	Selects which combination of control/monitor modules are assigned to each SCS-8⁄SCE-8 toggle switch group	See Table 3.5 on page 51 for FSCS Mode. See Table 3.10 on page 62 for HVAC Mode.	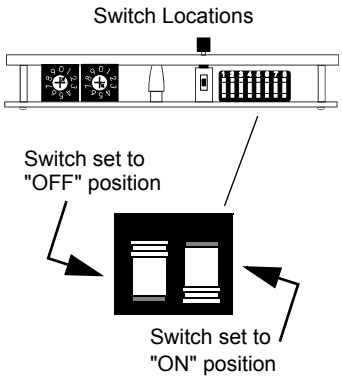
6*	Selects FSCS Mode or HVAC Mode for all 16 SCS-8⁄SCE-8 toggle switch groups	ON = FSCS Mode OFF = HVAC Mode	
7*	For FSCS Mode, selects Dedicated or Non-dedicated System for all 16 SCS-8⁄SCE-8 toggle switch groups	ON = Dedicated OFF = Non-dedicated	
	For HVAC Mode, enables/disables Control-By-Event lockout when manual operation is initiated at the SCS-8⁄SCE-8	ON = Enabled OFF = Disabled	
8	Installs or removes the built-in 120 ohm EIA-485 end-of-line termination resistor (see Figure 3.14)	ON = Installed OFF = Removed	
*Must be set “OFF” for INA, or when the SCS module is directly connected to the EIA-485 bus of an NFS-320, NFS2-640, or NFS-640 FACP.			

Table 3.4 SCS Dipswitch Mode Configurations

3.4.8 EIA-485 Addressing

The SCS-8 communicates with the FACP on the EIA-485 data line. Each SCS-8 requires a unique address so that the FACP can properly route data. There are 32 valid addresses in an FACP EIA-485 circuit in ACS mode, numbered 1-32, and each address provides the SCS with 64 points of monitor and control capability. Each SCS-8⁄SCE-8 uses one EIA-485 protocol address and its respective point capacity (64 points). The first 32 points are used for the SCS-8; the second 32 are used for the SCE-8.

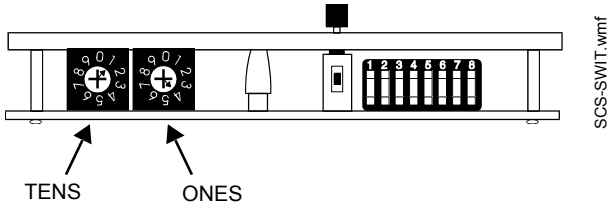

Figure 3.4 SCS Address Switches

Addressing the SCS-8 is accomplished by using the two rotary decimal switches mounted on the SCS-8. The decimal switches must be set to any of the available valid addresses (1-32) of the FACP. Each SCS-8 must be set to an address that is different than all other EIA-485 driven devices (annunciators, other SCS-8s, etc.).

The rotary switches are set by using a screwdriver to position the indicating mark on the rotary portion of the switch next to the desired digit. For example, to set address 14, the 'TENS' switch is set to 1 and the 'ONES' switch is set to 4.

3.4.9 Point Assignment

Each toggle switch group of an SCS⁄SCE uses four EIA-485 protocol points (of the 64 available) to control and monitor a particular fan or damper. Each of the four points is responsible for one of the four capabilities listed in Switch Group Type (**$CON_{ON/OP}$**, **$CON_{OFF/CL}$**, **$VER_{ON/OP}$**, **$VER_{OFF/CL}$**). When a switch group is assigned a particular switch group type, only those protocol points that mimic the capabilities of the switch group type are needed. The other points for that particular switch group are unneeded. The only other category for protocol points is unused. Unused protocol points are associated with switch groups on an SCS or SCE that are not being used. Only needed and unused EIA-485 protocol points must be programmed in the FACP for each SCS⁄SCE used. Unneeded protocol points do not get programmed. See Section 3.9 “Programming” for information on programming FACPs and annunciators for use with the SCS⁄SCE. The numbering scheme for each of the 64 points follows the format below:

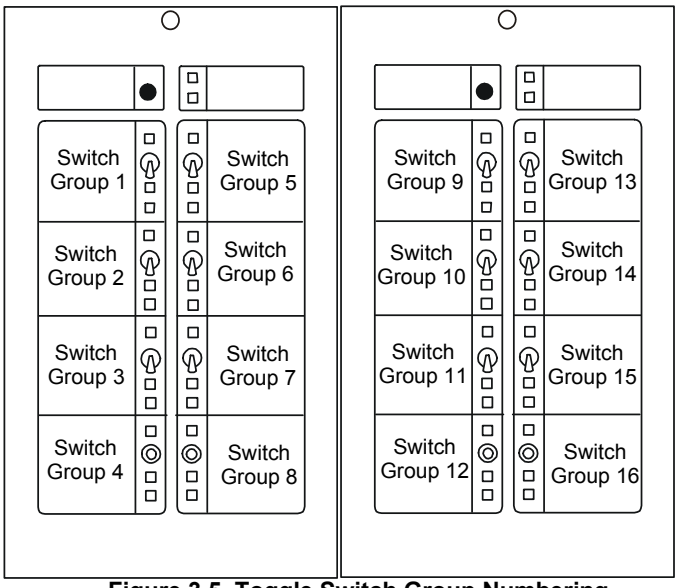

Figure 3.5 Toggle Switch Group Numbering

$CON_{ON/OP}$ Point Number for Switch N = [4 x (N-1) + 1]
Annunciator protocol output point used to turn on a fan or open a damper.

$CON_{OFF/CL}$ Point Number for Switch N = [4 x (N-1) + 2]
Annunciator protocol output point used to turn off a fan or close a damper.

$VER_{ON/OP}$ Point Number for Switch N = [4 x (N-1) + 3]
Annunciator protocol input point used to monitor the on state of sail or limit switch contacts.

$VER_{OFF/CL}$ Point Number for Switch N = [4 x (N-1) + 4]
Annunciator protocol input point used to monitor the off state of sail or limit switch contacts.

Where N is one of the 16 toggle switches of the SCS-8⁄SCE-8, as shown in Figure 3.5, or one of the 16 contacts of the SCS-8L⁄SCE-8L.

Example: What is the point number for the **$CON_{ON/OP}$** point associated with toggle switch number 11?
Annunciator Point = [4x(11-1)+1] = 41

This information should be calculated for each switch group so that proper mapping between SCS⁄SCE annunciator points and the FACP control and monitor modules can be programmed. This information will also be used to assign software type IDs to each of the 64 annunciator points (see Section 3.9 “Programming”).

Each protocol point classified as needed will have a control or monitor module associated with it. The control module associated with the **$CON_{ON/OP}$** protocol point is called the **$CON_{ON/OP}$**CM. The control module associated with the **$CON_{OFF/CL}$** protocol point is called the **$CON_{OFF/CL}$**CM. The monitor module associated with the **$VER_{ON/OP}$** protocol point is called the **$VER_{ON/OP}$**MM. The monitor module associated with the **$VER_{OFF/CL}$** point is called the **$VER_{OFF/CL}$**MM.

3.5 Cabinet and Chassis Mounting

Select an appropriate knockout on the enclosure. Mount the cabinet or backbox. Ground the enclosure to a solid metallic ground, such as a grounded cold water pipe. Pull all SCS-8 wiring into the enclosure as illustrated in Figure 3.6.

ABS-4D Backbox

The ABS-4D may be surface mounted or semi-flush mounted. Five knockouts are provided on the top of the box, five on the bottom and three on the back surface. Six mounting holes are provided on the back surface and two on each side. Backbox and door dimensions, as well as the spacing of the mounting holes and knockouts, are provided in document number 15073, ABS-4D Product Installation Drawing.

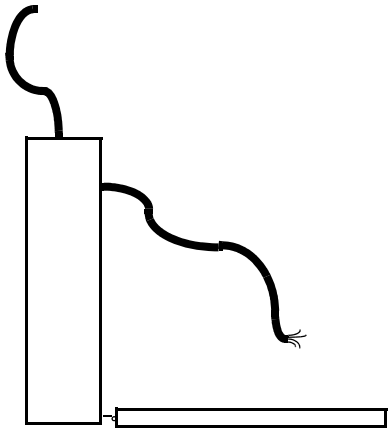

Figure 3.6 Installing the Enclosure

CAB-3, CAB-4 Cabinets

The CAB-3 and CAB-4 Cabinet series are available in four sizes (A through D). A trim ring is available for semi-flush mounting. Backbox and door dimensions, as well as the spacing of the mounting holes and knockouts, for all four sizes of these cabinets are provided in document number 15330, CAB-3/CAB-4 Installation Drawing.

CHS-4L Chassis

If a CHS-4L is to be used for installing the SCS-8L⁄SCE-8L, mount the chassis to the cabinet and secure with the hardware provided, as illustrated in Figure 3.7. A Grounding Cable Assembly may be connected to the chassis mounting stud for connection to the module's Earth Ground terminal.

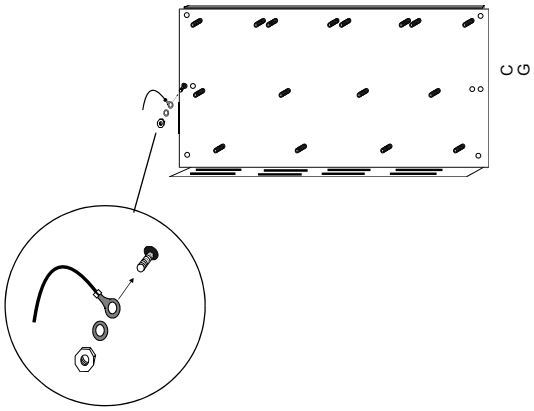

Figure 3.7 Mounting the Chassis

For each SCS-8L⁄SCE-8L module to be installed on the chassis, connect two female-to-female standoffs (provided) to the upper mounting studs on the chassis, as shown in Figure 3.8.

Custom Graphic Annunciator Cabinets

Follow the instructions from the graphic annunciator manufacturer if installation is in a graphic annunciator cabinet.

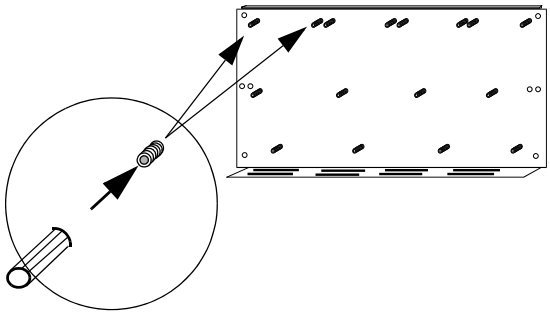

Figure 3.8 Board Standoffs

3.6 SCS-8⁄SCE-8 Installation

Labels

Labels have been provided for fan control (ON/OFF) as well as damper control (OPEN/CLOSED). If using the custom display labels, type the appropriate information in the white square areas provided. Carefully cut out the labels and insert them into the

SCS-8⁄SCE-8 by slipping them into the label slots on the back side of the SCS-8⁄SCE-8 faceplate. The labels should be inserted prior to installing the SCS-8⁄SCE-8 in a cabinet or backbox.

NOTE: To ensure the best fit, cut directly along the dotted line surrounding each label.

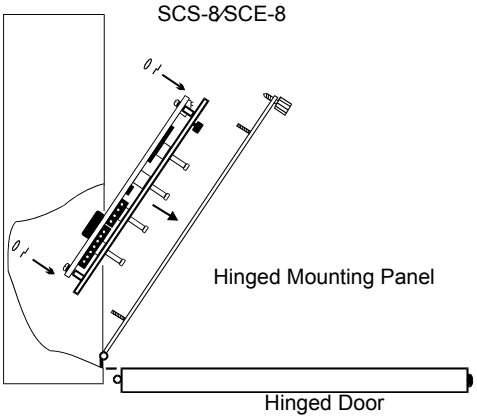

Figure 3.9 Mounting to ABS-4D Hinged Mounting Panel

ABS-4D Installation

Set the address and dipswitches on the SCS-8 module (see Section 3.8 “Configuration”).

Open the hinged mounting panel in the ABS-4D Cabinet. Position the SCS-8 module over the threaded studs in the first position on the mounting panel (positioning the bottom of the SCS-8 module closest to the hinge on the mounting panel). Secure the module with two nuts and lock washers as illustrated in Figure 3.9.

If an SCE-8 is required, plug one end of the Annunciator Expander Ribbon Cable into Connector J1 on the SCS-8. Install the SCE-8 in the second position of the ABS-4D mounting panel. Connect the Annunciator Expander Ribbon Cable from the SCS-8 to Connector J1 on the SCE-8, as shown in Figure 3.10. Repeat this procedure for the second set of SCS-8/SCE-8 modules to be installed in positions 3 and 4 on the mounting panel. Connect the wiring as shown in Figure 3.12, Figure 3.13, and Figure 3.14.

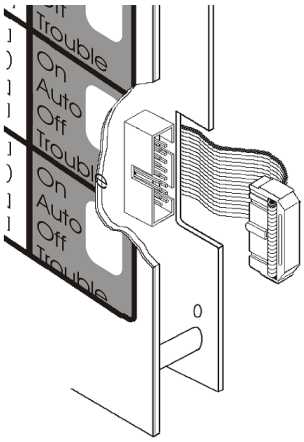

Figure 3.10 SCE Ribbon Cable Connection

CAB-3/CAB-4 Installation

Set the address and dipswitches on the SCS-8 module (see Section 3.8 “Configuration”).

A dress panel is required for mounting. Position the SCS-8/SCE-8 module over the threaded studs in the first two positions on the dress panel and secure with the two nuts and lock washers provided as illustrated in Figure 3.11. If an SCE-8 is required, plug one end of the Annunciator Expander Ribbon Cable into Connector J1 on the SCS-8. Install the SCE-8 in the second position of the dress panel. Connect the other end of the Annunciator Expander Ribbon Cable to Connector J1 on the SCE-8. Repeat this procedure for the second set of SCS-8/SCE-8 modules to be installed in positions 3 and 4 on the dress panel. Place the SCS/dress panel assembly into the cabinet. Secure the assembly with the screws provided. Connect the wiring as shown in Figure 3.12, Figure 3.13, and Figure 3.14.

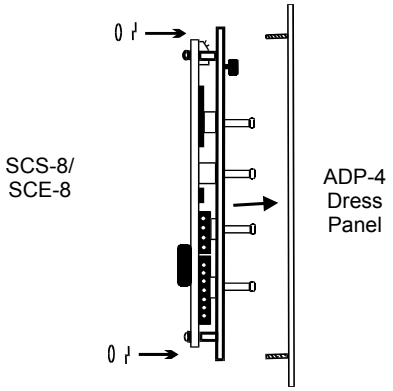

Figure 3.11 Dress Panel Mounting

EIA-485

Communication between the FACP and the SCS-8L is accomplished over a two-wire EIA-485 serial interface. Up to 32 EIA-485 devices may be installed on an EIA-485 circuit. The data communication and wiring are supervised by the fire alarm control panel. All SCS-8L Smoke Control Stations must be in the same room as the FACP/NCA when in FSCS mode. The data communication and wiring are supervised by the fire alarm control panel.

Wiring Specifications

The EIA-485 circuit cannot be T-Tapped; it must be wired in a continuous fashion from the control panel to the SCS-8. The maximum wiring distance between the panel and the last SCS-8 or annunciator is 6,000 feet @ 16 AWG. All SCS-8/ SCE-8 modules must be contained in the same room with the FACP/INA/NCA in FSCS mode. The wiring size must be a 12 to 18 AWG twisted pair cable having a Characteristic Impedance of 120 ohms, +/- 20% (shielded cable is recommended). Limit the total wire resistance to 100 ohms on the EIA-485 circuit, and 10 ohms on the SCS-8 power circuit. Do not run cable adjacent to, or in the same conduit as, 120 volts AC service, noisy electrical circuits that are powering mechanical bells or horns, audio circuits above 25 volts (RMS), motor control circuits, or SCR power circuits.

Terminal Wiring

The following should be considered when connecting terminal wiring:

- Do not “T-Tap” the EIA-485 circuit. It will not function properly. Wire it as shown in Figure 3.14.
- AM2020/AFP-1010/INA - Install the built-in 120 ohm resistor on the SCS-8 module if it is located at the physical end of the EIA-485 circuit, by turning ON dipswitch 8 on the SCS-8. Turn OFF dipswitch 8 on all other SCS-8 modules. If an EIA-485 device other than an SCS-8/SCE-8 is at the physical end of the EIA-485 loop, install a R-120 resistor across the EIA-485 out terminals of the device and ensure that dipswitch 8 is turned OFF on all SCS-8 modules.
- Connect Earth Ground to a mounting screw on the backbox or cabinet.
- Connect 24 VDC Power to the SCS-8. This power need not be supervised by a power supervision relay since it is inherently supervised by the control panel (loss of communications is registered during loss of power to the SCS-8).

When the EIA-485 shield is in conduit: Connect it to the system reference (system common). The shield can enter the cabinet, but must be insulated from the cabinet (no electrical contact). Between Smoke Control Stations, wire-nut multiple shields together and insulate. Treat the shield like a system wire making certain it does not come in contact with other wires or earth ground.

When the EIA-485 shield is not in conduit: Terminate the shield at the outside of the FACP backbox (ground). Do not allow the shield to enter or even touch the cabinet. Between Smoke Control Stations, wire-nut multiple shields together outside of the respective enclosures.

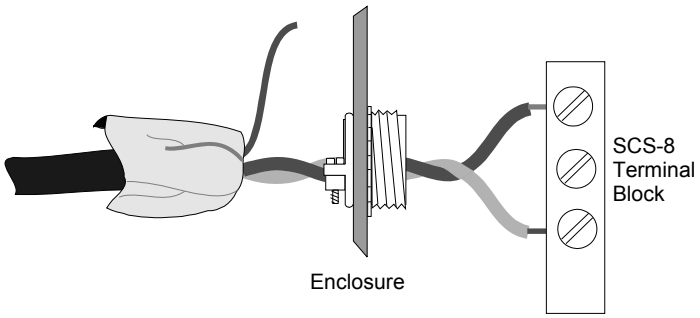

Figure 3.12 Terminating the Shield

NOTE: All enclosures, including the FACP backbox, must be connected to earth ground! Never use the shield for grounding purposes. Terminate the EIA-485 shield at the Fire Alarm Control Panel only.

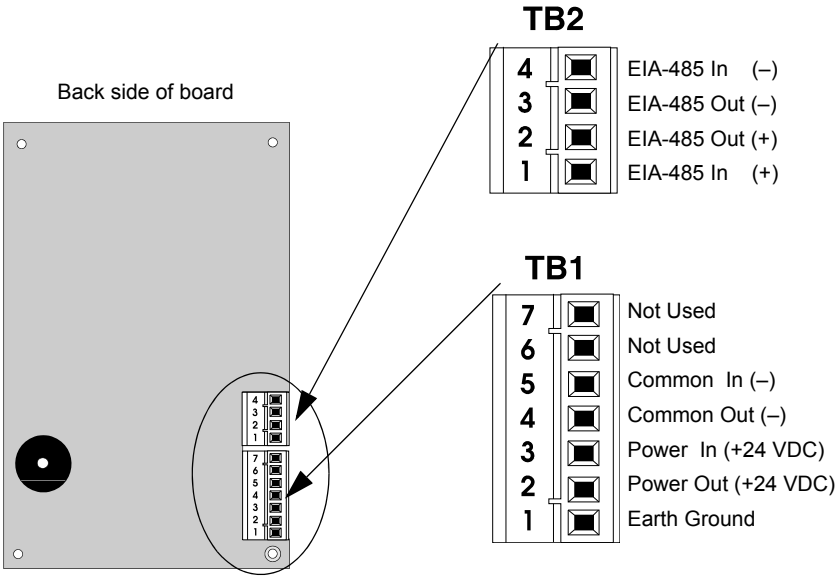

Figure 3.13 SCS-8 Terminals

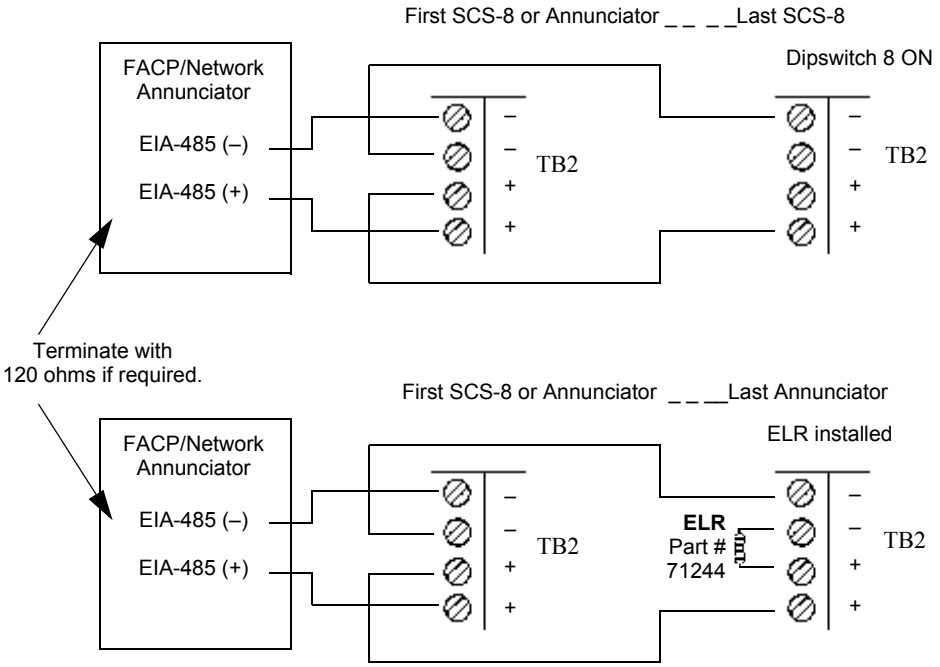

Figure 3.14 Wiring Two or More Smoke Control Stations (SCS-8)/Annunciators

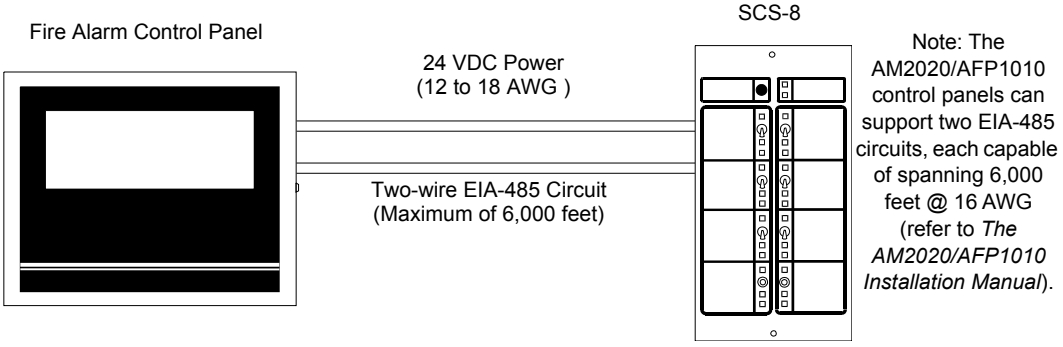

Figure 3.15 EIA-485 and Power Wiring

Power Supply

Power for the Smoke Control Station is provided via a separate power loop from the control panel which is inherently supervised (loss of power also results in a communication failure at the control panel). If the SCS-8 is powered remotely, it must be powered by a Power Limited power supply listed for fire protective signaling and there must be a common connection between the negative battery terminals of each supply. Use of the RPT-485 isolator/repeater in the control panel to isolate the EIA-485 line eliminates the need for the common connection between power supplies.

The SCS-8 can be powered by NFS-640, AMPS-24 or other regulated power supply listed for fire protective signaling service. A Power Supervision Relay is not required for the power connection to the SCS-8 since loss of power at the SCS-8 will result in a communication fault at the control panel. Refer to the appropriate FACP manual for terminal connections. The total amount of current drawn from these terminals cannot exceed the power supply rating in standby or in alarm.

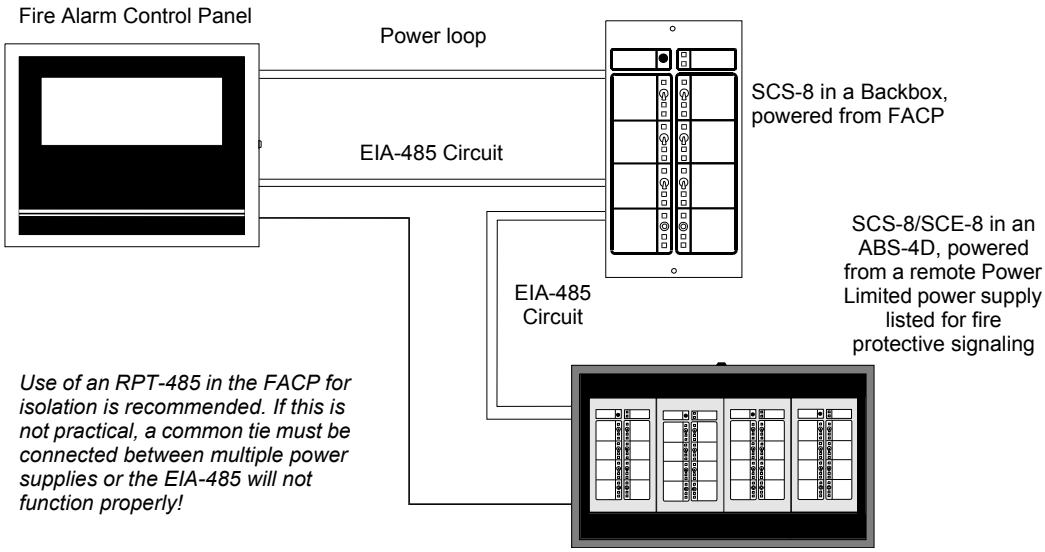

Note: All SCS/SCE modules configured for FSCS mode must be installed in the same room as the FACP or Network Annunciator to which they are connected.

Figure 3.16 SCS-8 with Remote Power Connection

Electrical Ratings

The input voltage and current draw (used for battery calculations) for the SCS-8/SCE-8 during all primary fire, primary non-fire, and secondary non-fire conditions is listed below:

Input Voltage:	18-32VDC	
Input Current:	FSCS Mode	HVAC Mode
SCS-8	62 mA	50 mA
SCE-8	36 mA	36 mA

Calculating SCS-8/SCE-8 Current Draw @ 24 VDC

FSCS Mode:

[ ] # of SCS-8 Modules in FSCS Mode X 62 mA = [ ]

[ ] # of SCE-8 Modules in FSCS Mode X 36 mA = [ ]

FSCS Total 24 VDC = [ ]

HVAC Mode:

[ ] # of SCS-8 Modules in HVAC Mode X 50 mA = [ ]

[ ] # of SCE-8 Modules in HVAC Mode X 36 mA = [ ]

HVAC Total 24 VDC = [ ]

The SCS-8/SCE-8 must be considered when calculating primary and secondary power requirements for the FACP or network annunciator that powers them. Refer to the appropriate manual for the calculation of power requirements for the entire system.

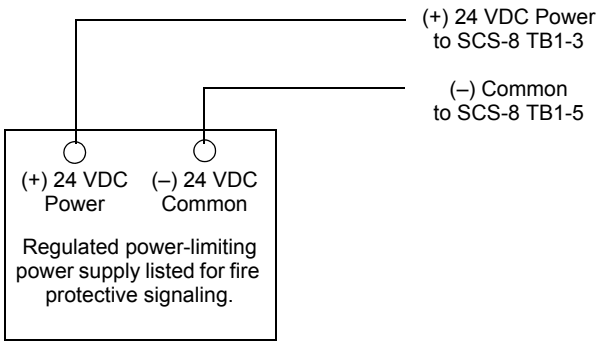

Figure 3.17 Power Supply Connections

Programming and Testing the Smoke Control Station

This completes the SCS-8/SCE-8 installation. After programming the fire alarm control panel to accept the SCS-8/SCE-8, fully test the system to ensure that each switch performs its intended function, each LED lights as required, and that the SCS-8/SCE-8 can perform the functions outlined in Section 3.8.1 “Firefighter's Smoke Control Station (FSCS) Mode” (if operating in FSCS Mode) or Section 3.8.2 “Heating, Ventilating & Air Conditioning (HVAC) Mode” (if operating in HVAC Mode).

NOTE: Refer to the “Restrictions” section of this manual for information on compatible software part numbers.

3.7 SCS-8L/SCE-8L Installation

Custom Graphic Annunciators

If a designer is using SCS-8L/SCE-8L modules for the system design, the modules must be mounted in a graphic annunciator backbox and interfaced with switches and lamps on the faceplate. Ensure that selected backboxes are UL-listed for the combination according to the UL category code UUKL. See Appendix C, “Special Applications”, on page 191 for a sample application.

CHS-4L Installation

The SCS-8L/SCE-8L modules mount on four standoffs inside of a custom graphic annunciator cabinet. Alternately, the modules can be installed in a standard CHS-4L low-profile chassis for mouning in a cabinet.

NOTE: The SCS-8L/SCE-8L can only be mounted in the CHS-4L chassis for the HVAC mode. If using the FSCS mode the SCS-8L/SCE-8L must be installed in a custom graphic annunciator backbox.

Slip the bottom edge of the SCS-8L into the first slot on the chassis, swing the module towrard the standoffs and secure it to the chassis with the screws provided, as shown in Figure 3.18. If an SCE-8L is required, plug one end of the annunciator expander ribbon cable into connector J1 on the SCS-8L. Connect the other end of the annunciator expander ribbon cable to connector J1 on the SCE-8L. Slip the bottom edge of the SCE-8L into the second slot on the chassis and swing the module toward the standoffs and secure it to the chassis with the screws provided. Repeat this procedure for the second set of SCS-8L/SCE-8L modules to be installed in positions 3 and 4 on the chassis. Connect the wiring as shown in Figure 3.19, Figure 3.20, Figure 3.21, and Figure 3.22.

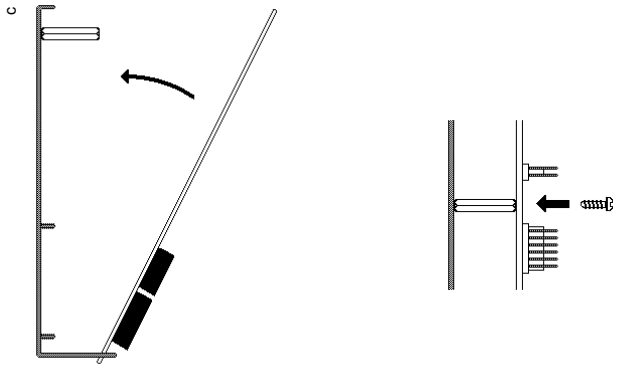

Figure 3.18 Installing SCS-8L/SCE-8L Modules

Wiring the Switches

The connectors and pin assignments used to wire switches to the SCS-8L/SCE-8L are shown in Figure 3.19. The switches for each switch group wired to J1 and J2 must be single pull, double throw, center-off type as shown in Figure 3.19. The center-off position is used for Automatic Control. Switches can be obtained from any company which manufactures UL-listed graphic annunciator panels.

NOTE:
1. The Local Acknowledge/Lamp Test switch wired to J10 must be momentary type.
2. The key-lock switch wired to J11 on the SCS-8L provides access security for all control switches wired to that module. Switches will not function when the key-lock switch is in its closed position.

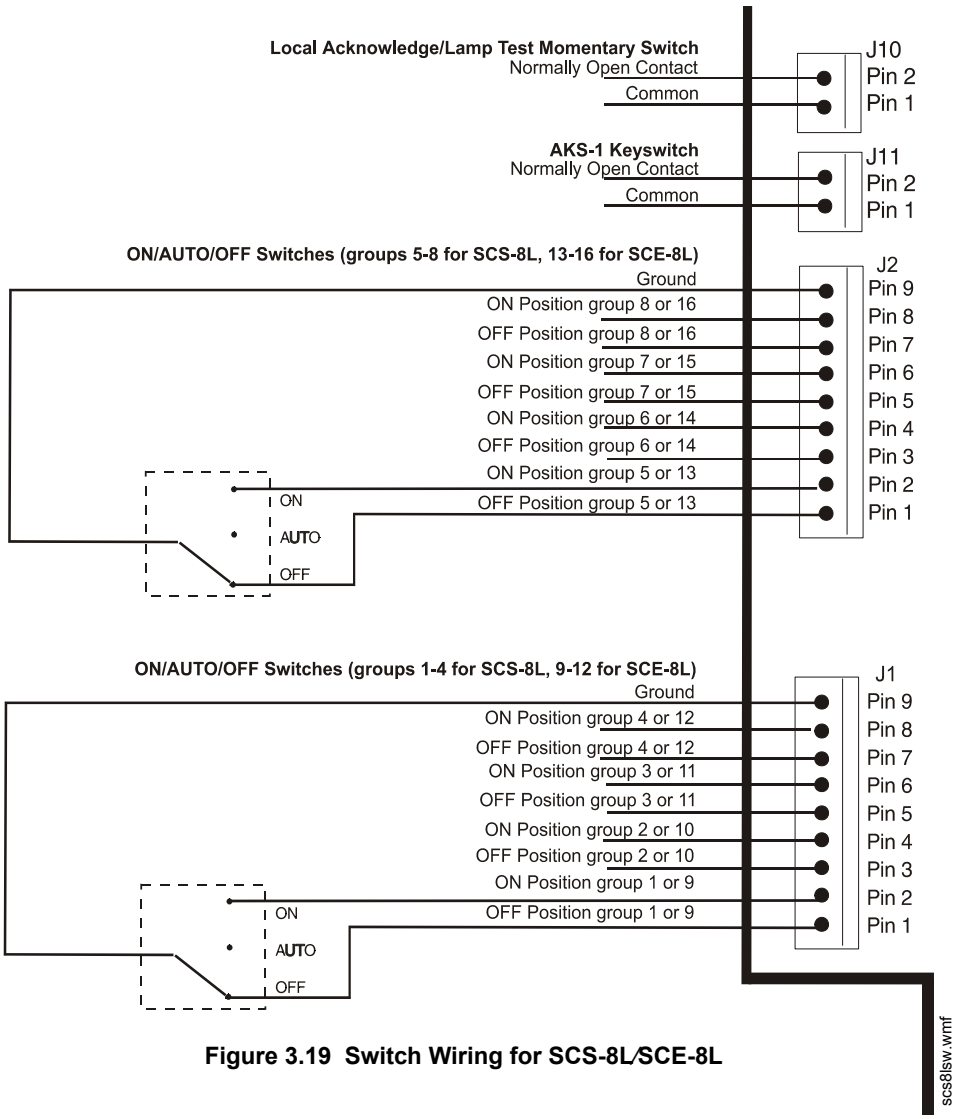

Figure 3.19 Switch Wiring for SCS-8L/SCE-8L

Wiring the LEDs or Lamps

The LEDs or Lamps can be powered from 24 VDC or 5 VDC, depending on the load required. Figures 3.21 and 3.22 illustrate connection of the desired voltage. The following connectors and pin assignments are used to wire LEDs or Lamps to the SCS-8L/SCE-8L:

J6	+24 VDC LED Power	
	pin 1	+24 VDC
	pin 2	+24 VDC
J8	+5 VDC LED Power	
	pin 1	+5 VDC
	pin 2	+5 VDC

The maximum output current for each LED or Lamp is 50 mA if powered by 24 VDC or 20 mA if powered by 5 VDC.

NOTE: All LEDs must be located in the same room as the modules.

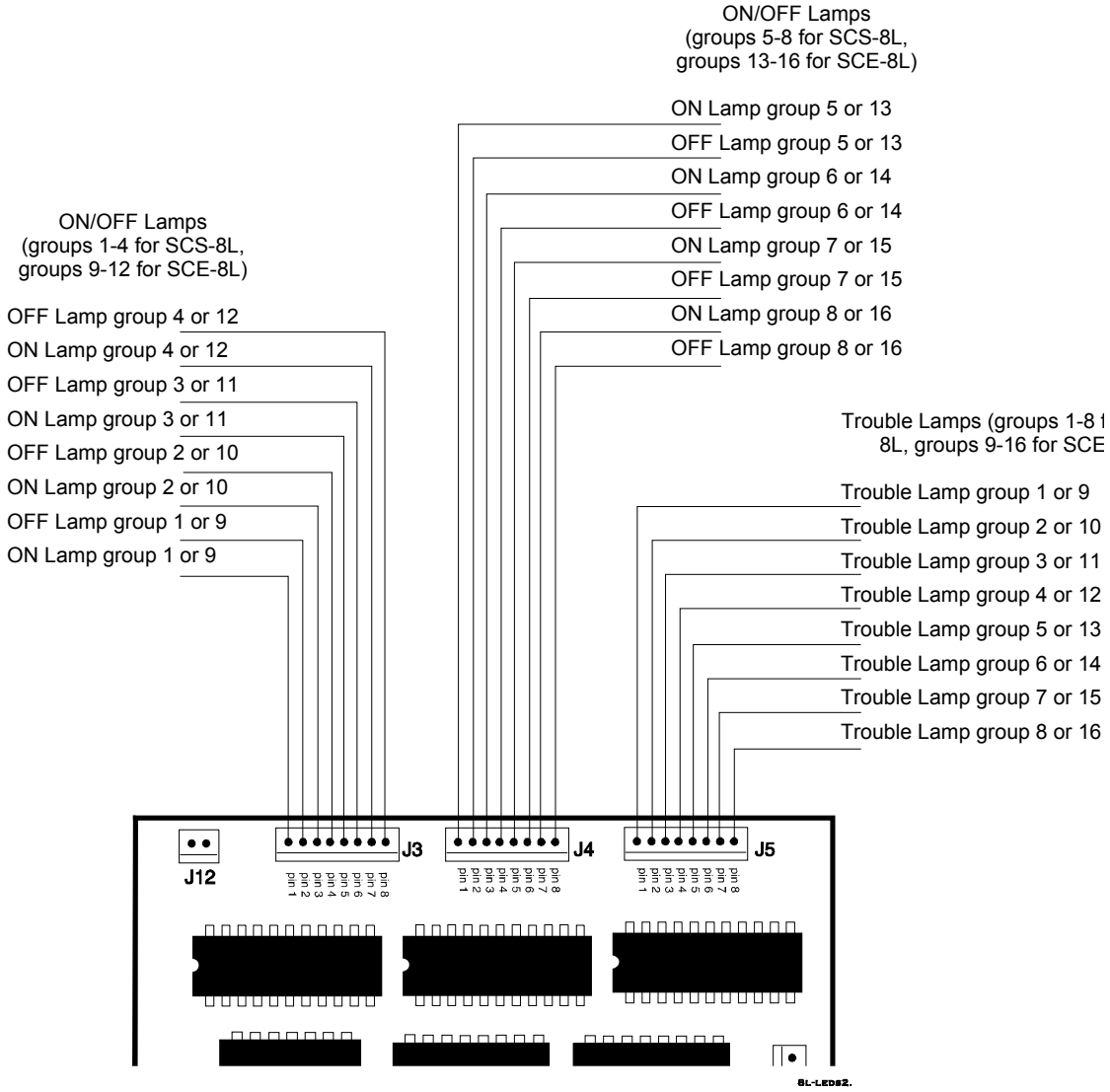

Figure 3.20 Lamp Wiring for SCS-8L/SCE-8L

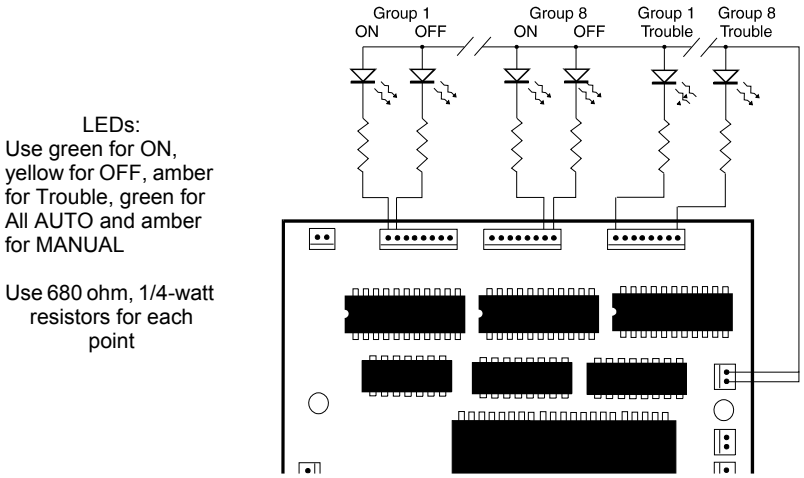

Figure 3.21 LED Connection @ 5 VDC (Using High Efficiency 2mA LEDs)

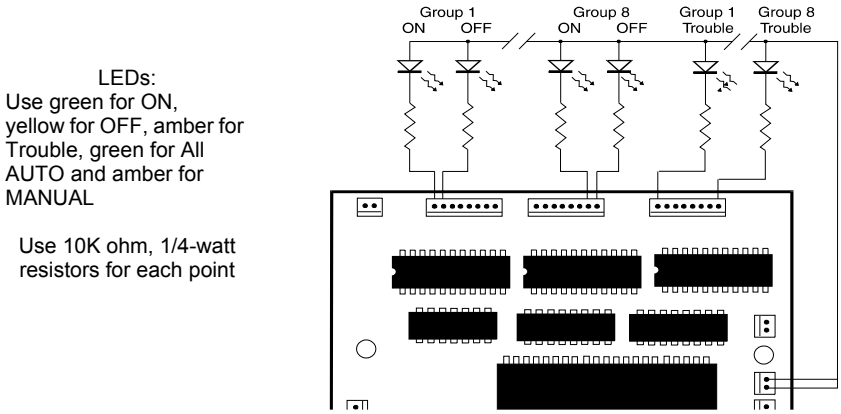

Figure 3.22 LED Connection @ 24 VDC (Using High Efficiency 2mA LEDs)

Installing Relay Modules

An optional Relay Expander Module (LDM-R32) may be used in place of wiring LEDs to the SCS-8L.

Secure the LDM-R32 to the SCS-8L with the standoffs provided (see Figure 3.23). Attach ribbon cables between the LDM-R32 and the SCS-8L for each group of relays needed (connectors J5, J6, and J7 on the LDM-R32 to J3, J4, and J5 on the SCS-8L respectively) as illustrated in Figure 3.24.

Connect the Relay Power Ribbon Cable between J10 on the LDM-R32 and J7 on the SCS-8L. This connection supplies the power needed to energize the LDM-R32's relay coils during activation. For more information on the LDM-R32, refer to The LDM Series Lamp Driver Annunciator Modules, document number 15885.

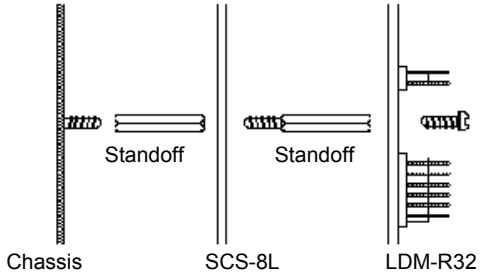

Figure 3.23 Installing Optional Relay Modules

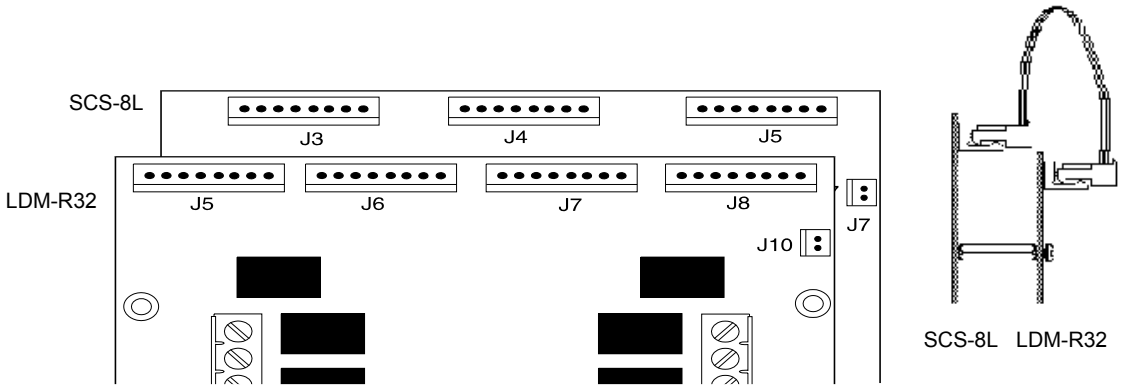

Figure 3.24 LDM Ribbon Cable Connection

EIA-485

Communication between the FACP and the SCS-8L is accomplished over a two-wire EIA-485 serial interface. Up to 32 EIA-485 devices may be installed on an EIA-485 circuit. The data communication and wiring are supervised by the fire alarm control panel. All SCS-8L Smoke Control Stations must be in the same room as the FACP/Network Annunciator when in FSCS mode.

■ Wiring Specifications

The EIA-485 circuit cannot be T-Tapped; it must be wired in a continuous fashion from the control panel to the SCS-8L. The maximum wiring distance between the panel and the last SCS-8L or annunciator is 6000 feet @ 16 AWG. However, all SCS-8L/SCE-8L modules must be contained in the same room with the FACP/Network Annunciator when in FSCS mode. The wiring size must be a 12 to 18 AWG twisted pair cable having Characteristic Impedance of 120 ohms, +/-20% (Shielded cable is recommended). Limit the total wire resistance to 100 ohms on the EIA-485 circuit, and 10 ohms on the SCS-8L power circuit. Do not run cable adjacent to, or in the same conduit as, 120 volts AC service, noisy electrical circuits that are powering mechanical bells or horns, audio circuits above 25 volts (RMS), motor control circuits, or SCR power circuits.

■ Terminal Wiring

The following should be considered when connecting terminal wiring:

- Do not “T-Tap” the EIA-485 circuit; it will not function properly. Wire it as shown in Figure 3.27.
- Install the built-in 120 ohm resistor on the SCS-8L module if it is located at the physical end of the EIA-485 Loop, by turning ON dipswitch 8 on the SCS-8L. Turn OFF dipswitch 8 on all other SCS-8L modules. If an EIA-485 device other than an SCS-8L/SCE-8L is at the physical end of the EIA-485 loop, install a R-120 resistor across the EIA-485 out terminals of the device and ensure that dipswitch 8 is turned OFF on all SCS-8L modules.
- Connect Earth Ground to a mounting screw on the backbox or cabinet.
- Connect 24 VDC Power to the SCS-8L. This power need not be supervised by a power supervision relay since it is inherently supervised by the control panel (loss of communications is registered during loss of power to the SCS-8L).

When the EIA-485 shield is in conduit: Connect it to the system reference (system common). The shield can enter the cabinet, but must be insulated from the cabinet (no electrical contact). Between Smoke Control Stations, wire-nut multiple shields together and insulate. Treat the shield like a system wire making certain it does not come in contact with other wires or earth ground.

When the EIA-485 shield is not in conduit: Terminate the shield at the outside of the FACP backbox (ground). Do not allow the shield to enter or even touch the cabinet. Between Smoke Control Stations, wire-nut multiple shields together outside of the respective enclosures.

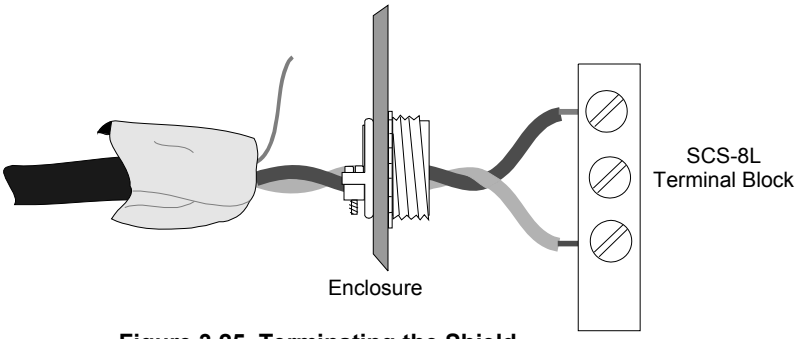

Figure 3.25 Terminating the Shield

NOTE: All enclosures, including the FACP backbox, must be connected to earth ground! Never use the shield for grounding purposes. Terminate the EIA-485 shield at the Fire Alarm Control Panel only.

Power Supply

Power for the Smoke Control Station is provided via a separate power loop from the control panel which is inherently supervised (loss of power also results in a communication failure at the control panel). If the SCS-8L is powered remotely, it must be powered by a Power Limited power supply listed for fire protective signaling and there must be a common connection between the negative battery terminals of each supply. Use of the RPT-485 isolator/repeater in the control panel to isolate the EIA-485 line eliminates the need for the common connection between power supplies.

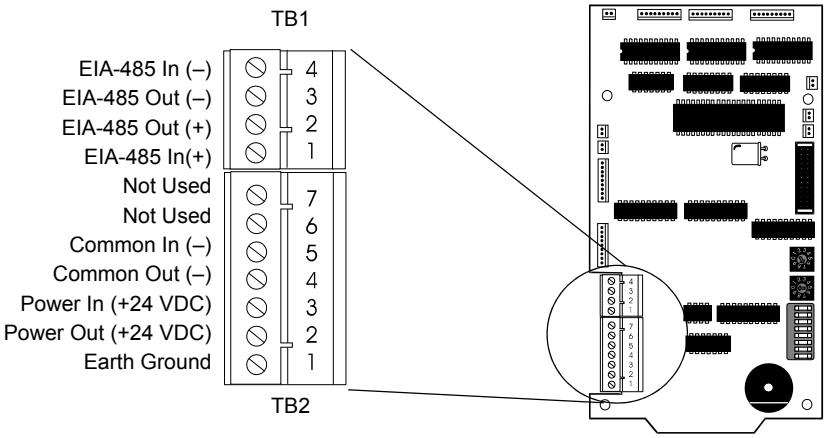

Figure 3.26 SCS-8L Terminal Blocks

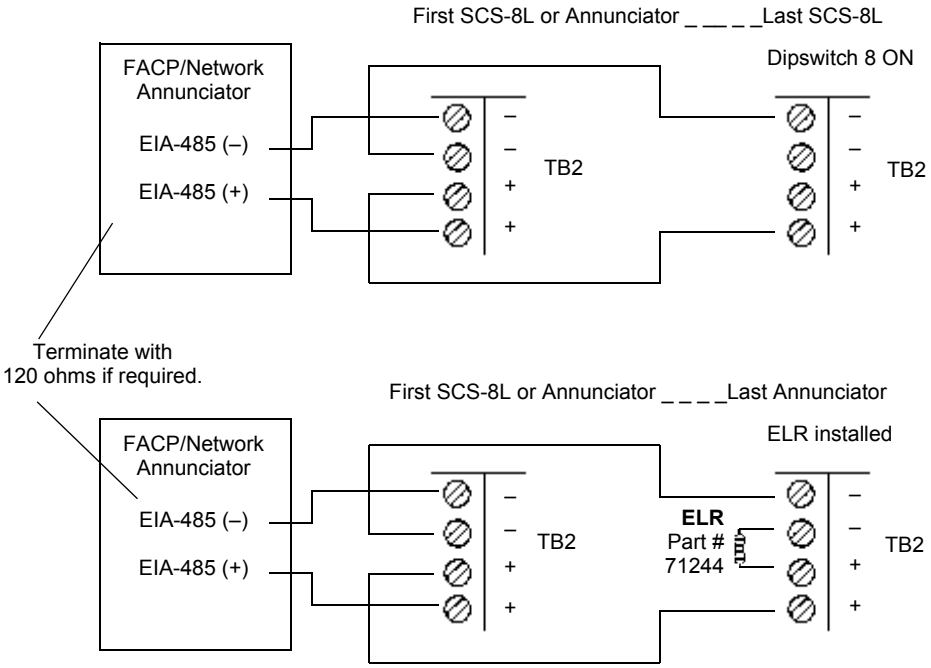

Figure 3.27 Wiring Two or More Smoke Control Stations (SCS-8L)/Annunciators

The SCS-8L can be powered by an MPS-24A or other regulated power supply listed for fire protective signaling service. A Power Supervision Relay is not required for the power connection to the SCS-8L since loss of power at the SCS-8L will result in a communication fault at the control panel. Use TB3 Terminals 3 (+) and 4(–) from the MPS-24A (do not cut jumper JP5) to power the SCS-8L. The total amount of current drawn from these terminals cannot exceed the MPS-24A rating in standby or in alarm.

Electrical Ratings

The input voltage and current draw (used for battery calculations) for the SCS-8L⁄SCE-8L during all primary fire, primary non-fire, and secondary non-fire conditions is listed below:

Input Voltage:	18-32 VDC	
Input Current:	FSCS Mode	HVAC Mode
SCS-8L	33 mA	18 mA
SCE-8L	5 mA	5 mA
Maximum LED Current:		
20 mA @ 5 V		
50 mA @ 24 V		

Calculating SCS-8L⁄SCE-8L Current Draw

[ ]	# of SCS-8L Modules in FSCS Mode	X 33 mA =	[ ] mA
[ ]	# of SCS-8L Modules in HVAC Mode	X 18 mA =	[ ] mA
[ ]	# of SCE-8L Modules	X 5 mA =	[ ] mA
[ ]	# of LDM-R32 Modules	X 216 mA =	[ ] mA
[ ]	# of LEDs on SCS/SCE @ 24 VDC	X [ ] mA per LED =	[ ] mA
[ ]	# of LEDs on SCS/SCE @ 5 VDC	X [ ] mA per LED =[ ] / 16.0 =	[ ] mA
		Total Current Draw =	[ ] mA

The SCS-8L⁄SCE-8L must be considered when calculating primary and secondary power requirements for the FACP or network annunciator that powers them. Refer to the appropriate manual for the calculation of power requirements for the entire system.

Programming and Testing the Smoke Control Station

This completes the SCS-8L⁄SCE-8L installation. After programming the fire alarm control panel to accept the SCS-8L⁄SCE-8L, fully test the system to ensure that each switch performs its intended function, each LED lights as required, and that the SCS-8L⁄SCE-8L can perform the functions outlined in Section 3.8.1 “Firefighter's Smoke Control Station (FSCS) Mode” (if operating in FSCS Mode) or Section 3.8.2 “Heating, Ventilating & Air Conditioning (HVAC) Mode” (if operating in HVAC Mode).

NOTE: Refer to the “Restrictions” section of this manual for information on compatible software part numbers.

3.8 Configuration

3.8.1 Firefighter's Smoke Control Station (FSCS) Mode

The Firefighter's Smoke Control Station (FSCS) Mode is enabled when dipswitch six on the SCS is in the ON position (see Table 3.4). In this mode, the SCS⁄SCE becomes the FSCS and is intended to have the highest priority over associated fan and damper functions. For a fan or damper to be used in a smoke control system, the system must not only be able to control the device, but it must be able to verify what state it is in (ON/OFF or OPEN/CLOSED). Correct installation of the control and monitor modules associated with the SCS⁄SCE is vital to ensure proper operation. Each toggle switch group is assigned a switch group type number (see Table 3.3) which is referenced in the text, tables, and appendices identifying the configuration, connection, and operation of associated equipment.

Operating in FSCS mode, the SCS⁄SCE is capable of Dedicated and Non-dedicated System operation. When dipswitch 7 is in the ON position, the SCS⁄SCE operates as a Dedicated System; in the OFF position the SCS⁄SCE operates as a Non-dedicated System (see Dedicated System Operation and Non-dedicated System Operation headings later in this section).

NOTE: ONYX Series FACPs and associated network annunciators are only compatible with SCS software #SCS2.84 or higher. They are not compatible with any 73XXX series software versions.
To use the SCS V4.0, NFS2-3030, and/or NCA-2 must be running software V21 or higher.

SCS Dipswitch Settings for FSCS Mode

Table 3.5 describes the dipswitch settings necessary to configure the SCS/SCE for many variations of controlling smoke. Although the configurations are shown with an SCE, the configuration for the SCS is the same as it is shown in the table if an SCE is not used. Each description of a dipswitch setting follows the format shown below:

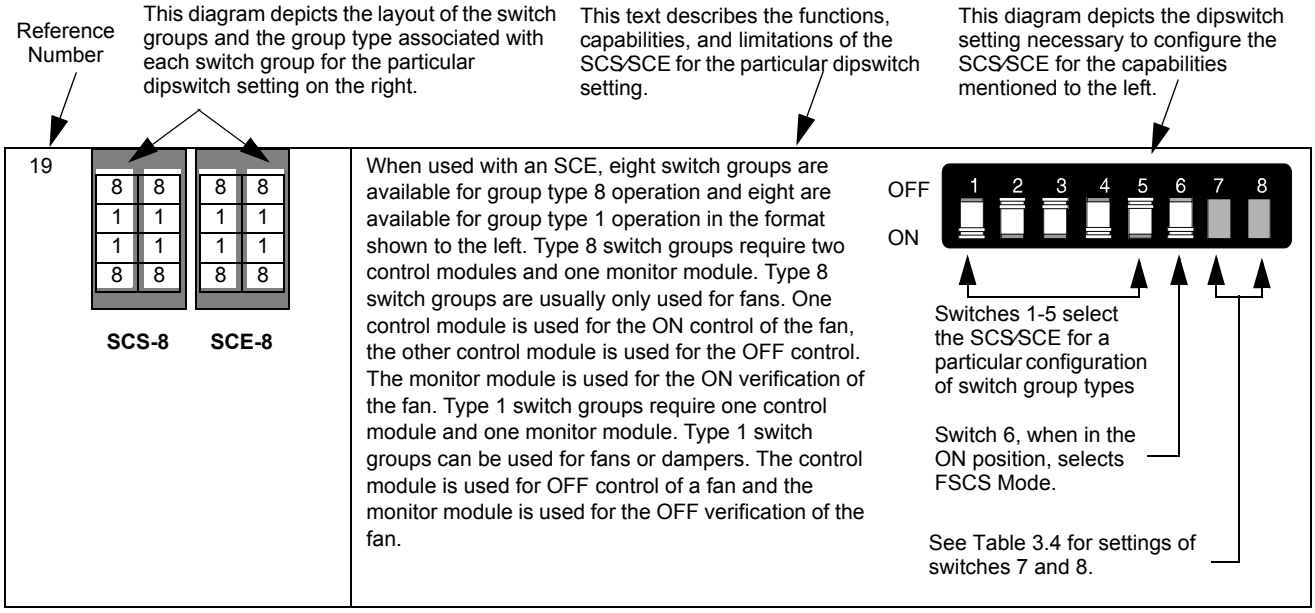

For instance, this particular dipswitch setting allows the SCS/SCE to function in the FSCS mode (dipswitch 6 in the ON position). The setting for switches 1-5 not only select the FSCS group types of 8 and 1 but configure the switch group layout as shown to the left, where switch groups 1, 4, 5, 8, 9, 12, 13, and 16 are set for group type 8 operation and switch groups 2, 3, 6, 7, 10, 11, 14, and 15 are set for group type 1.

NOTE: There are four formats for switch configurations (not all combinations are available):

1. All 16 switch groups the same group type.
2. Switch groups 1-4 and 9-12 one switch group type; 5-8 and 13-16 another group type.
3. Switch groups 1-4 and 13-16 one switch group type; 5-12 another group type.
4. Switch groups 1, 4, 5, 8, 9, 12, 13, and 16 one group type; 2, 3, 6, 7, 10, 11, 14, and 15 another group type.

1	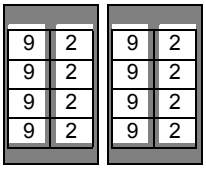 **SCS-8** **SCE-8**	When used with an SCE, eight switch groups are available for group type 9 operation and eight are available for group type 2 operation in the format shown to the left. Type 9 switch groups require two control modules and two monitor modules. Type 9 switch groups are usually only used for dampers, but can be used for fans when redundancy of fan verification is necessary. One control module is used for the ON control of the fan, the other control module is used for the OFF control. One monitor module is used for the ON verification of the fan, the other is used for the OFF verification. Type 2 switch groups require one control module and one monitor module. Type 2 switch groups can be used for fans or dampers. The control module is used for OFF control of a fan and the monitor module is used for the ON verification of the fan.
2	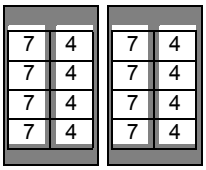 **SCS-8** **SCE-8**	When used with an SCE, eight switch groups are available for group type 7 operation and eight are available for group type 4 operation in the format shown to the left. Type 7 switch groups require two control modules and one monitor module. Type 7 switch groups can be used for fans or dampers. One control module is used for the ON control of the fan, the other control module is used for the OFF control. The monitor module is used for the OFF verification of the fan. Type 4 switch groups require one control module and one monitor module. Type 4 switch groups can be used for fans or dampers. The control module is used for ON control of a fan and the monitor module is used for the OFF verification of the fan.
3	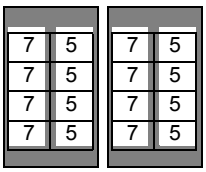 **SCS-8** **SCE-8**	When used with an SCE, eight switch groups are available for group type 7 operation and eight are available for group type 5 operation in the format shown to the left. Type 7 switch groups require two control modules and one monitor module. Type 7 switch groups can be used for fans or dampers. One control module is used for the ON control of the fan, the other control module is used for the OFF control. The monitor module is used for the OFF verification of the fan. Type 5 switch groups require one control module and one monitor module. Type 5 switch groups can be used for fans or dampers. The control module is used for ON control of a fan and the monitor module is used for the ON verification of the fan. 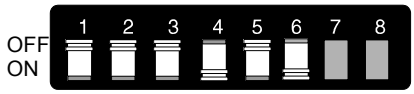
4	 **SCS-8** **SCE-8**	When used with an SCE, eight switch groups are available for group type 7 operation and eight are available for group type 6 operation in the format shown to the left. Type 7 switch groups require two control modules and one monitor module. Type 7 switch groups can be used for fans or dampers. One control module is used for the ON control of the fan, the other control module is used for the OFF control. The monitor module is used for the OFF verification of the fan. Type 6 switch groups require one control module and two monitor modules. Type 6 switch groups are usually only used for dampers. The control module is used for OPEN control of a damper, one monitor module is used for the OPEN verification of the damper and the other monitor module is used for the CLOSED verification of the damper.
5	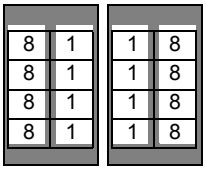 **SCS-8** **SCE-8**	When used with an SCE, eight switch groups are available for group type 8 operation and eight are available for group type 1 operation in the format shown to the left. Type 8 switch groups require two control modules and one monitor module. Type 8 switch groups can be used for fans or dampers. One control module is used for the ON control of the fan, the other control module is used for the OFF control. The monitor module is used for the ON verification of the fan. Type 1 switch groups require one control module and one monitor module. Type 1 switch groups can be used for fans or dampers. The control module is used for OFF control of a fan and the monitor module is used for the OFF verification of the fan. 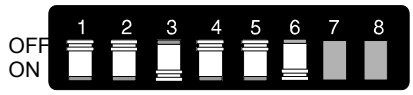
6	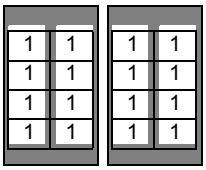 **SCS-8** **SCE-8**	When used with an SCE, all 16 switch groups are available for group type 1 operation. Type 1 switch groups require one control module and one monitor module. Type 1 switch groups can be used for fans or dampers. The control module is used for OFF control of a fan and the monitor module is used for the OFF verification of the fan. 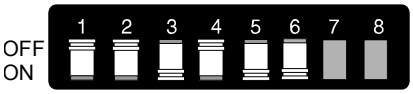

Table 3.5 FSCS Mode Dipswitch Settings (1 of 6) *

7	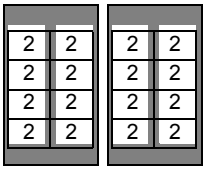 **SCS-8** **SCE-8**	When used with an SCE, all 16 switch groups are available for group type 2 operation. Type 2 switch groups require one control module and one monitor module. Type 2 switch groups can be used for fans or dampers. The control module is used for OFF control of a fan and the monitor module is used for the ON verification of the fan.
8	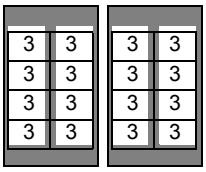 **SCS-8** **SCE-8**	When used with an SCE, all 16 switch groups are available for group type 3 operation. Type 3 switch groups require one control module and two monitor modules. Type 3 switch groups are usually only used for dampers. The control module is used for CLOSED control of a damper, one monitor module is used for the OPEN verification of the damper and the other monitor module is used for the CLOSED verification of the damper.
9	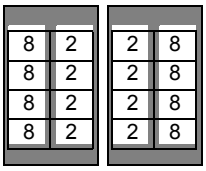 **SCS-8** **SCE-8**	When used with an SCE, eight switch groups are available for group type 8 operation and eight are available for group type 2 operation in the format shown to the left. Type 8 switch groups require two control modules and one monitor module. Type 8 switch groups can be used for fans or dampers. One control module is used for the ON control of the fan, the other control module is used for the OFF control. The monitor module is used for the ON verification of the fan. Type 2 switch groups require one control module and one monitor module. Type 2 switch groups can be used for fans or dampers. The control module is used for OFF control of a fan and the monitor module is used for the ON verification of the fan.
10	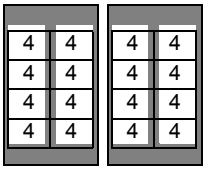 **SCS-8** **SCE-8**	When used with an SCE, all 16 switch groups are available for group type 4 operation. Type 4 switch groups require one control module and one monitor module. Type 4 switch groups can be used for fans or dampers. The control module is used for ON control of a fan and the monitor module is used for the OFF verification of the fan.
11	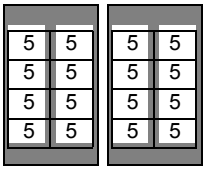 **SCS-8** **SCE-8**	When used with an SCE, all 16 switch groups are available for group type 5 operation. Type 5 switch groups require one control module and one monitor module. Type 5 switch groups can be used for fans or dampers. The control module is used for ON control of a fan and the monitor module is used for the ON verification of the fan. 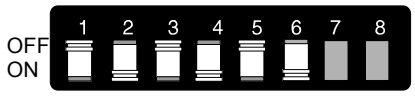
12	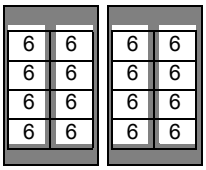 **SCS-8** **SCE-8**	When used with an SCE, all 16 switch groups are available for group type 6 operation. Type 6 switch groups require one control module and two monitor modules. Type 6 switch groups are usually only used for dampers. The control module is used for OPEN control of a damper, one monitor module is used for the OPEN verification of the damper and the other monitor module is used for the CLOSED verification of the damper.
13	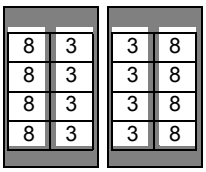 **SCS-8** **SCE-8**	When used with an SCE, eight switch groups are available for group type 8 operation and eight are available for group type 3 operation in the format shown to the left. Type 8 switch groups require two control modules and one monitor module. Type 8 switch groups can be used for fans or dampers. One control module is used for the ON control of the fan, the other control module is used for the OFF control. The monitor module is used for the ON verification of the fan. Type 3 switch groups require one control module and two monitor modules. Type 3 switch groups are usually only used for dampers. The control module is used for CLOSED control of a damper, one monitor module is used for the OPEN verification of the damper and the other monitor module is used for the CLOSED verification of the damper. 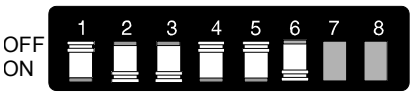

Table 3.5 FSCS Mode Dipswitch Settings (2 of 6) *

14	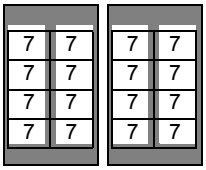 **SCS-8** **SCE-8**	When used with an SCE, all 16 switch groups are available for group type 7 operation. Type 7 switch groups require two control modules and one monitor module. Type 7 switch groups can be used for fans or dampers. One control module is used for OFF control of a fan and the other is used for ON control of the fan. The monitor module is used for the OFF verification of the fan.
15	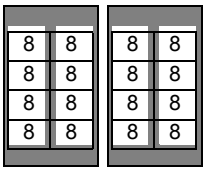 **SCS-8** **SCE-8**	When used with an SCE, all 16 switch groups are available for group type 8 operation. Type 8 switch groups require two control modules and one monitor module. Type 8 switch groups can be used for fans or dampers. One control module is used for OFF control of a fan and the other is used for ON control of the fan. The monitor module is used for the ON verification of the fan.
16	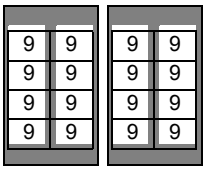 **SCS-8** **SCE-8**	When used with an SCE, all 16 switch groups are available for group type 9 operation. Type 9 switch groups require two control modules and two monitor modules. Type 9 switch groups are usually only used for dampers, but can be used for fans when redundancy of fan verification is necessary. One control module is used for OFF control of a fan and the other is used for ON control of the fan. One monitor module is used for the OFF verification of the fan and the other is used for ON verification of the fan.
17	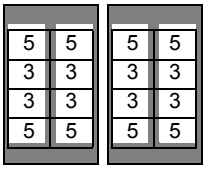 **SCS-8** **SCE-8**	When used with an SCE, eight switch groups are available for group type 5 operation and eight are available for group type 3 operation in the format shown to the left. Type 5 switch groups require one control module and one monitor module. Type 5 switch groups can be used for fans or dampers. The control module is used for the ON control of the fan. The monitor module is used for the ON verification of the fan. Type 3 switch groups require one control module and two monitor modules. Type 3 switch groups are usually only used for dampers. The control module is used for CLOSED control of a damper, one monitor module is used for the OPEN verification of the damper and the other monitor module is used for the CLOSED verification of the damper.
18	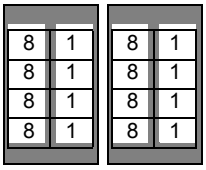 **SCS-8** **SCE-8**	When used with an SCE, eight switch groups are available for group type 8 operation and eight are available for group type 1 operation in the format shown to the left. Type 8 switch groups require two control modules and one monitor module. Type 8 switch groups can be used for fans or dampers. One control module is used for the ON control of the fan, the other control module is used for the OFF control. The monitor module is used for the ON verification of the fan. Type 1 switch groups require one control module and one monitor module. Type 1 switch groups can be used for fans or dampers. The control module is used for OFF control of a fan and the monitor module is used for the OFF verification of the fan.
19	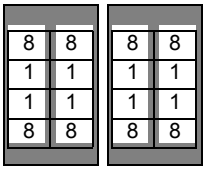 **SCS-8** **SCE-8**	When used with an SCE, eight switch groups are available for group type 8 operation and eight are available for group type 1 operation in the format shown to the left. Type 8 switch groups require two control modules and one monitor module. Type 8 switch groups can be used for fans or dampers. One control module is used for the ON control of the fan, the other control module is used for the OFF control. The monitor module is used for the ON verification of the fan. Type 1 switch groups require one control module and one monitor module. Type 1 switch groups can be used for fans or dampers. The control module is used for OFF control of a fan and the monitor module is used for the OFF verification of the fan. 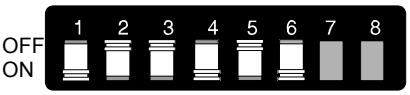

Table 3.5 FSCS Mode Dipswitch Settings (3 of 6) *

20	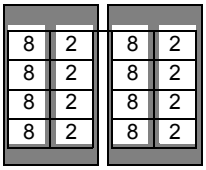 **SCS-8** **SCE-8**	 When used with an SCE, eight switch groups are available for group type 8 operation and eight are available for group type 2 operation in the format shown to the left. Type 8 switch groups require two control modules and one monitor module. Type 8 switch groups can be used for fans or dampers. One control module is used for the ON control of the fan, the other control module is used for the OFF control. The monitor module is used for the ON verification of the fan. Type 2 switch groups require one control module and one monitor module. Type 2 switch groups can be used for fans or dampers. The control module is used for OFF control of a fan and the monitor module is used for the ON verification of the fan.
21	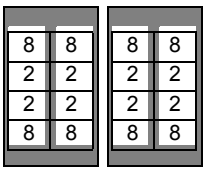 **SCS-8** **SCE-8**	 When used with an SCE, eight switch groups are available for group type 8 operation and eight are available for group type 2 operation in the format shown to the left. Type 8 switch groups require two control modules and one monitor module. Type 8 switch groups can be used for fans or dampers. One control module is used for the ON control of the fan, the other control module is used for the OFF control. The monitor module is used for the ON verification of the fan. Type 2 switch groups require one control module and one monitor module. Type 2 switch groups can be used for fans or dampers. The control module is used for OFF control of a fan and the monitor module is used for the ON verification of the fan.
22	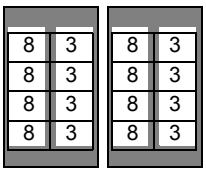 **SCS-8** **SCE-8**	 When used with an SCE, eight switch groups are available for group type 8 operation and eight are available for group type 3 operation in the format shown to the left. Type 8 switch groups require two control modules and one monitor module. Type 8 switch groups can be used for fans or dampers. One control module is used for the ON control of the fan, the other control module is used for the OFF control. The monitor module is used for the ON verification of the fan. Type 3 switch groups require one control module and two monitor modules. Type 3 switch groups are usually only used for dampers. The control module is used for CLOSED control of a damper, one monitor module is used for the OPEN verification of the damper and the other monitor module is used for the CLOSED verification of the damper.
23	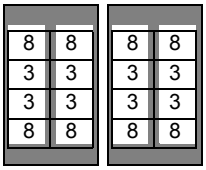 **SCS-8** **SCE-8**	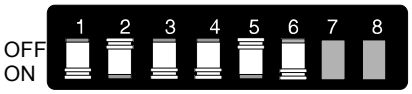 When used with an SCE, eight switch groups are available for group type 8 operation and eight are available for group type 3 operation in the format shown to the left. Type 8 switch groups require two control modules and one monitor module. Type 8 switch groups can be used for fans or dampers. One control module is used for the ON control of the fan, the other control module is used for the OFF control. The monitor module is used for the ON verification of the fan. Type 3 switch groups require one control module and two monitor modules. Type 3 switch groups are usually only used for dampers. The control module is used for CLOSED control of a damper, one monitor module is used for the OPEN verification of the damper and the other monitor module is used for the CLOSED verification of the damper.
24	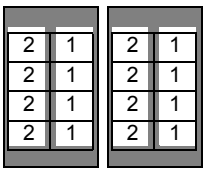 **SCS-8** **SCE-8**	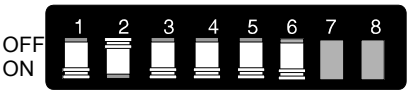 When used with an SCE, eight switch groups are available for group type 2 operation and eight are available for group type 1 operation in the format shown to the left. Type 2 switch groups require one control module and one monitor module. Type 2 switch groups can be used for fans or dampers. The control module is used for OFF control of a fan and the monitor module is used for the ON verification of the fan. Type 1 switch groups require one control module and one monitor module. Type 1 switch groups can be used for fans or dampers. The control module is used for OFF control of a fan and the monitor module is used for the OFF verification of the fan.
25	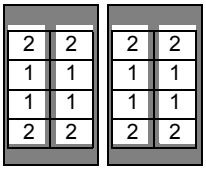 **SCS-8** **SCE-8**	 When used with an SCE, eight switch groups are available for group type 2 operation and eight are available for group type 1 operation in the format shown to the left. Type 2 switch groups require one control module and one monitor module. Type 2 switch groups can be used for fans or dampers. The control module is used for OFF control of a fan and the monitor module is used for the ON verification of the fan. Type 1 switch groups require one control module and one monitor module. Type 1 switch groups can be used for fans or dampers. The control module is used for OFF control of a fan and the monitor module is used for the OFF verification of the fan.

Table 3.5 FSCS Mode Dipswitch Settings (4 of 6) *

26	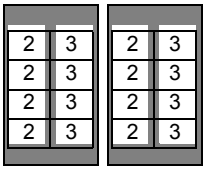 **SCS-8** **SCE-8**	 When used with an SCE, eight switch groups are available for group type 2 operation and eight are available for group type 3 operation in the format shown to the left. Type 2 switch groups require one control module and one monitor module. Type 2 switch groups can be used for fans or dampers. The control module is used for OFF control of a fan and the monitor module is used for the ON verification of the fan. Type 3 switch groups require one control module and two monitor modules. Type 3 switch groups are usually only used for dampers. The control module is used for CLOSED control of a damper, one monitor module is used for the OPEN verification of the damper and the other monitor module is used for the CLOSED verification of the damper.
27	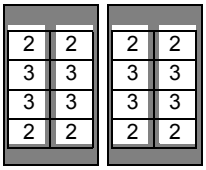 **SCS-8** **SCE-8**	 When used with an SCE, eight switch groups are available for group type 2 operation and eight are available for group type 3 operation in the format shown to the left. Type 2 switch groups require one control module and one monitor module. Type 2 switch groups can be used for fans or dampers. The control module is used for OFF control of a fan and the monitor module is used for the ON verification of the fan. Type 3 switch groups require one control module and two monitor modules. Type 3 switch groups are usually only used for dampers. The control module is used for CLOSED control of a damper, one monitor module is used for the OPEN verification of the damper and the other monitor module is used for the CLOSED verification of the damper.
28	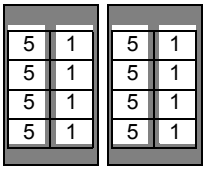 **SCS-8** **SCE-8**	 When used with an SCE, eight switch groups are available for group type 5 operation and eight are available for group type 1 operation in the format shown to the left. Type 5 switch groups require one control module and one monitor module. Type 5 switch groups can be used for fans or dampers. The control module is used for the ON control of the fan. The monitor module is used for the ON verification of the fan. Type 1 switch groups require one control module and one monitor module. Type 1 switch groups can be used for fans or dampers. The control module is used for OFF control of a fan and the monitor module is used for the OFF verification of the fan.
29	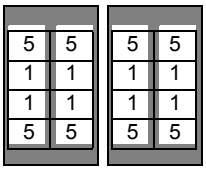 **SCS-8** **SCE-8**	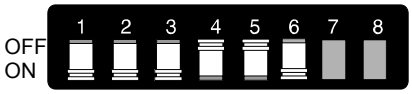 When used with an SCE, eight switch groups are available for group type 5 operation and eight are available for group type 1 operation in the format shown to the left. Type 5 switch groups require one control module and one monitor module. Type 5 switch groups can be used for fans or dampers. The control module is used for the ON control of the fan. The monitor module is used for the ON verification of the fan. Type 1 switch groups require one control module and one monitor module. Type 1 switch groups can be used for fans or dampers. The control module is used for OFF control of a fan and the monitor module is used for the OFF verification of the fan.

Table 3.5 FSCS Mode Dipswitch Settings (5 of 6) *

30	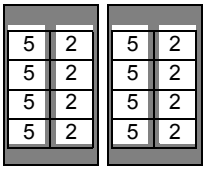 **SCS-8** **SCE-8**	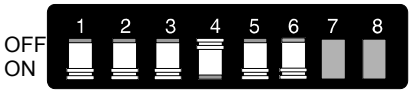 When used with an SCE, eight switch groups are available for group type 5 operation and eight are available for group type 2 operation in the format shown to the left. Type 5 switch groups require one control module and one monitor module. Type 5 switch groups can be used for fans or dampers. The control module is used for the ON control of the fan. The monitor module is used for the ON verification of the fan. Type 2 switch groups require one control module and one monitor module. Type 2 switch groups can be used for fans or dampers. The control module is used for OFF control of a fan and the monitor module is used for the ON verification of the fan.
31	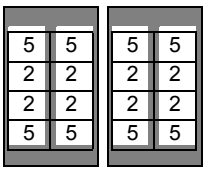 **SCS-8** **SCE-8**	 When used with an SCE, eight switch groups are available for group type 5 operation and eight are available for group type 2 operation in the format shown to the left. Type 5 switch groups require one control module and one monitor module. Type 5 switch groups can be used for fans or dampers. The control module is used for the ON control of the fan. The monitor module is used for the ON verification of the fan. Type 2 switch groups require one control module and one monitor module. Type 2 switch groups can be used for fans or dampers. The control module is used for OFF control of a fan and the monitor module is used for the ON verification of the fan.
32	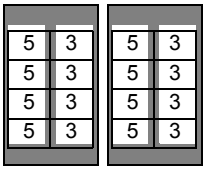 **SCS-8** **SCE-8**	 When used with an SCE, eight switch groups are available for group type 5 operation and eight are available for group type 3 operation in the format shown to the left. Type 5 switch groups require one control module and one monitor module. Type 5 switch groups can be used for fans or dampers. The control module is used for the ON control of the fan. The monitor module is used for the ON verification of the fan. Type 3 switch groups require one control module and two monitor modules. Type 3 switch groups are usually only used for dampers. The control module is used for CLOSED control of a damper, one monitor module is used for the OPEN verification of the damper and the other monitor module is used for the CLOSED verification of the damper.

Table 3.5 FSCS Mode Dipswitch Settings (6 of 6) *

* See Table 3.4 for settings of dipswitches 7 and 8.

Toggle Switch Operation for FSCS Mode

■ FSCS ON/AUTO/OFF (OPEN/AUTO/CLOSED) Toggle Switch Operation

Each ON/AUTO/OFF toggle switch will function according to Table 3.6 for non-alarm conditions and Table 3.7 for alarm conditions. Placing a toggle switch in the ON or OFF position will activate/deactivate the control points as shown. Once this has occurred, further control-by-event processing at the FACP is inhibited.

NOTE: The AUTO position column in the table indicates the control module (CM) condition when the control panel is in a normal, non-alarm condition.

SWITCH GROUP TYPE	FSCS NON-DEDICATED SYSTEM TOGGLE SWITCH POSITION		
	ON	AUTO	OFF
1	Deactivates $CON_{OFF/CL}CM$	Deactivates $CON_{OFF/CL}CM$	Activates $CON_{OFF/CL}CM$
2	Deactivates $CON_{OFF/CL}CM$	Deactivates $CON_{OFF/CL}CM$	Activates $CON_{OFF/CL}CM$
3	Deactivates $CON_{OFF/CL}CM$	Deactivates $CON_{OFF/CL}CM$	Activates $CON_{OFF/CL}CM$
4	Activates $CON_{ON/OP}CM$	Deactivates $CON_{ON/OP}CM$	Deactivates $CON_{ON/OP}CM$
5	Activates $CON_{ON/OP}CM$	Deactivates $CON_{ON/OP}CM$	Deactivates $CON_{ON/OP}CM$
6	Activates $CON_{ON/OP}CM$	Deactivates $CON_{ON/OP}CM$	Deactivates $CON_{ON/OP}CM$
7	Activates $CON_{ON/OP}CM$ Deactivates $CON_{OFF/CL}CM$	Deactivates $CON_{ON/OP}CM$ Deactivates $CON_{OFF/CL}CM$	Deactivates $CON_{ON/OP}CM$ Activates $CON_{OFF/CL}CM$
8	Activates $CON_{ON/OP}CM$ Deactivates $CON_{OFF/CL}CM$	Deactivates $CON_{ON/OP}CM$ Deactivates $CON_{OFF/CL}CM$	Deactivates $CON_{ON/OP}CM$ Activates $CON_{OFF/CL}CM$
9	Activates $CON_{ON/OP}CM$ Deactivates $CON_{OFF/CL}CM$	Deactivates $CON_{ON/OP}CM$ Deactivates $CON_{OFF/CL}CM$	Deactivates $CON_{ON/OP}CM$ Activates $CON_{OFF/CL}CM$

Table 3.6 FSCS Toggle Switch Functions (Non-Alarm Condition)

SWITCH GROUP TYPE	FSCS DEDICATED SYSTEM TOGGLE SWITCH POSITION		
	ON	AUTO	OFF
1-9	see above	depends on CBE after Reset (see Automatic Control in Dedicated System Operation section)	see above

Table 3.6 FSCS Toggle Switch Functions (Non-Alarm Condition)

SWITCH GROUP TYPE	FSCS NON-DEDICATED SYSTEM TOGGLE SWITCH POSITION		
	ON	AUTO	OFF
1	Deactivates $CON_{OFF/CL}CM$	depends on CBE after Reset	Activates $CON_{OFF/CL}CM$
2	Deactivates $CON_{OFF/CL}CM$	depends on CBE after Reset	Activates $CON_{OFF/CL}CM$
3	Deactivates $CON_{OFF/CL}CM$	depends on CBE after Reset	Activates $CON_{OFF/CL}CM$
4	Activates $CON_{ON/OP}CM$	depends on CBE after Reset	Deactivates $CON_{ON/OP}CM$
5	Activates $CON_{ON/OP}CM$	depends on CBE after Reset	Deactivates $CON_{ON/OP}CM$
6	Activates $CON_{ON/OP}CM$	depends on CBE after Reset	Deactivates $CON_{ON/OP}CM$
7	Activates $CON_{ON/OP}CM$ Deactivates $CON_{OFF/CL}CM$	depends on CBE after Reset	Deactivates $CON_{ON/OP}CM$ Activates $CON_{OFF/CL}CM$
8	Activates $CON_{ON/OP}CM$ Deactivates $CON_{OFF/CL}CM$	depends on CBE after Reset	Deactivates $CON_{ON/OP}CM$ Activates $CON_{OFF/CL}CM$
9	Activates $CON_{ON/OP}CM$ Deactivates $CON_{OFF/CL}CM$	depends on CBE after Reset	Deactivates $CON_{ON/OP}CM$ Activates $CON_{OFF/CL}CM$
SWITCH GROUP TYPE	FSCS DEDICATED SYSTEM TOGGLE SWITCH POSITION		
	ON	AUTO	OFF
1-9	see above	depends on CBE after Reset (see Automatic Control in Dedicated System Operation section)	see above

Table 3.7 FSCS Toggle Switch Functions (Alarm Condition)

Switch Group LEDs for FSCS Mode

■ FSCS Toggle Switch Group LEDs

There are three LEDs associated with each SCS⁄SCE toggle switch. These LEDs function according to Table 3.8.

SWITCH GROUP TYPE	Green LED turns ON when	Yellow LED turns ON when	Amber LED turns ON when
1	$VER_{OFF/CL}MM$ Deactivates	$VER_{ON/OP}MM$ Activates	see FSCS Trouble Conditions
2	$VER_{ON/OP}MM$ Activates	$VER_{ON/OP}MM$ Deactivates	see FSCS Trouble Conditions
3	$VER_{ON/OP}MM$ Activates	$VER_{ON/OP}MM$ Activates	see FSCS Trouble Conditions
4	$VER_{OFF/CL}MM$ Deactivates	$VER_{ON/OP}MM$ Activates	see FSCS Trouble Conditions
5	$VER_{ON/OP}MM$ Activates	$VER_{ON/OP}MM$ Deactivates	see FSCS Trouble Conditions
6	$VER_{ON/OP}MM$ Activates	$VER_{ON/OP}MM$ Activates	see FSCS Trouble Conditions
7	$VER_{OFF/CL}MM$ Deactivates	$VER_{ON/OP}MM$ Activates	see FSCS Trouble Conditions
8	$VER_{ON/OP}MM$ Activates	$VER_{ON/OP}MM$ Deactivates	see FSCS Trouble Conditions
9	$VER_{ON/OP}MM$ Activates	$VER_{ON/OP}MM$ Activates	see FSCS Trouble Conditions

Table 3.8 FSCS Toggle Switch Group LED Operation

■ FSCS Trouble Conditions

When an SCS⁄SCE trouble condition exists, the type of trouble can be identified on the SCS⁄SCE modules by a series of one or more LED flashes (trouble codes) as described in this section.

■ FSCS Module Trouble

A trouble affecting the entire SCS⁄SCE is called a module trouble condition. A module trouble may occur for any of the following reasons:

- Communication is lost with the FACP/Network Annunciator. All amber trouble LEDs will flash rapidly and the piezo will sound. During this condition, an annunciator communication fault will be displayed at the control panel. (COMM LOSS)

  Example: Trouble with the EIA-485 communication loop or incorrect address selection.

- Annunciator points 33-64
  All yellow LEDs will flash rapidly and the piezo will sound.

  For AM2020/AFP1010 only: Annunciator points 33 - 64 are not programmed as type ID ACON and an SCE is not connected or responding to the SCS. During this condition, an expander trouble will be displayed at the control panel.

  NFS-320 or NFS2-640 with NCA-2: Annunciator points 33 - 64 are not programmed to an unused output point and the SCE-8 is not connected. During this condition, an expander trouble will be displayed at the control panel.

  NFS2-3030 with or without NCA-2: Annunciator points 33-64 are not programmed to an unused output point and the SCE-8 is not connected. During this condition, an annunciator trouble will be displayed at the control panel. (EXPANDER CONFIG)
- Dipswitch positions 1 - 6 are OFF (factory default setting). All green LEDs will flash rapidly and the piezo will sound. During this condition an expander trouble will be displayed at the control panel. (DIP SW DEFAULT)
- For SCS v4.0 or higher (requires NFS2-3030 and/or NCA-2 v.21 or higher); Dipswitch position 6 (HVAC/FSCS) does not match the panel configuration in ACS programming (HVAC/FSCS). (MODE CONFIG)

Pressing the Local Acknowledge/Lamp Test switch during any of these conditions will silence the piezo.

■ FSCS Toggle Switch Group Trouble

A toggle switch group trouble condition applies to a single toggle switch and its four annunciator points. FSCS group trouble conditions are defined as follows:

- A trouble condition exists for one or more of the four devices programmed to annunciate at that specific toggle switch. The piezo sounds and the respective trouble LED will blink once, followed by a pause, then repeat until acknowledged. (DEVICE TROUBLE)

  Example: Open circuit or loss of communication with a module.
- For AM2020/AFP1010 only: Annunciator software type ID does not match the associated toggle switch function (See Tables 3.5 and 3.13). During this condition an external trouble is annunciated at the control panel.

  Example: A1P1 has a software type ID AMON but should be ACON since the first annunciator point associated with the first toggle switch in the SCS/SCE is expected to perform a control function (i.e. AMON programmed for a control point).
- NFS2-3030, or NFS-320, or NFS2-640, or NFS2-3030 with NCA-2: (Similar to the AM2020/AFP1010). Annunciator point is not mapped to a device of the proper type ID. The piezo sounds and the respective trouble LED will blink twice, followed by a pause, then repeat until acknowledged. During this condition an external trouble is annunciated at the control panel. (DEVICE MISMATCH)

  Example: A1P1 is mapped to point N1L1M1 (monitor) but should be mapped to a valid “control” module.
- Annunciator point activity or trouble occurs for an annunciator point which was not programmed to be active according to the group type. The piezo sounds and the respective trouble LED will blink three times, followed by a pause, then repeat until acknowledged. During this condition an external trouble is annunciated at the control panel. (DIP SW MISMATCH)

  Example: A group is programmed as type 5 ($CON_{ON/OP}$ and $VER_{ON/OP}$), but the off control point indicates an invalid reply. Check group programming and annunciator point mapping.
- The expected smoke control state is not reached within the specified time after activation. The piezo sounds and the respective trouble LED will blink continuously until acknowledged. During this condition, an external trouble is annunciated at the control panel. (Default trouble delay time is 90 seconds; SCS V4.0 is programmable between 0 –180 seconds.) (TIME OUT)

  Example: A switch is placed in the ON position, its corresponding control module activates, but the monitor module monitoring the point does not report a change of state within the specified delay time.

FSCS toggle switch group troubles are acknowledged by pressing the Local Acknowledge/Lamp Test switch, at which time any flashing trouble LEDs will turn on steady and the piezo will turn off. The LED group trouble codes may be reset by pressing the Local Acknowledge/Lamp Test switch for at least five seconds. When the trouble is cleared, the respective trouble LED will turn off. The piezo shall resound for any subsequent trouble conditions.

Dedicated System Operation

When a system functions only to control smoke (equipment is not linked to building HVAC controls), the system is classified as Dedicated. The FACP must provide automatic control for a dedicated system. Dedicated Systems require weekly automatic testing by the FACP. This can be accomplished with the AM2020/AFP1010, and NFS2-3030 by using the time (TIM) operator of Control-By-Event (CBE) Programming, or with the NFS-320/NFS2-640 by setting Special Zones F5 or F6 to the proper timing and including the zone(s) in the CBE equations. For more information on Control-By-Event operators and programming, refer to the NFS2-3030, NFS2-640 or NFS-320 programming documentation, the *NCA-2 Manual*, or the *AM2020/AFP1010 Manual*. In Dedicated Systems, the AM2020/AFP1010 must be programmed for receiving unit operation.

Equations must be written to do all of the following steps for all control points present within a toggle switch group type when a $CON_{ON/OP}CM$ is a member of that group (if only an $CON_{OFF/CL}CM$ is present, skip these four steps):

1. Program the FACP using CBE equations to establish the automatic control state (when the Dedicated System is not controlling smoke) of all control points.
2. Program the FACP using CBE equations which are activated during a fire. Activate/deactivate all control points as required to help contain smoke.
3. Program the FACP to activate the $CON_{ON/OP}CM$ (if normally deactivated when the Dedicated System is not controlling smoke) or deactivate the $CON_{ON/OP}CM$ (if normally activated) for five minutes once per week using a CBE equation.
4. Program the FACP to activate the $CON_{OFF/CL}CM$ (if present) whenever the $CON_{ON/OP}CM$ is inactive using a CBE equation for the $CON_{OFF/CL}CM$.

Equations must be written to do all of the following steps for a control point within a toggle switch group type, if only an OFF control module is present:

1. Program the FACP using CBE equations to establish the automatic control state (when the Dedicated System is not controlling smoke) of the $CON_{OFF/CL}CM$ point.
2. Program the FACP using CBE equations which are activated during a fire. Activate/deactivate all control points as required to help contain smoke.
3. Activate the $CON_{OFF/CL}CM$ (if normally deactivated when the Dedicated System is not controlling smoke) or deactivate the $CON_{OFF/CL}CM$ (if normally activated) for five minutes once per week using a CBE equation.

NOTE: CBE equations for time functions are deactivated automatically during a fire alarm condition. ONYX Series FACPs must be programmed such that CBE deactivates when an alarm condition is present.

Automatic Control. Automatic control is established when all toggle switches are set to the AUTO position and no fire has been detected by the panel.

Manual Control. Manual actions may be taken to override the automatic functions. Moving any switch on the SCS⁄SCE out of the automatic position (ON/OFF) will cause the FSCS to enter the manual control state. In this state, any further automatic operation is inhibited for the respective SCS⁄SCE.

According to the requirements of NFPA 92A, after the first alarm, automatic operation will be inhibited for the entire FSCS. Manual intervention is then required to make any changes to the state of smoke control points.

All smoke control elements (fans, dampers, etc.) must be configured to provide feedback via monitor points present in the toggle switch group type. Dedicated Systems employ feedback constantly to monitor system operation when the SCS⁄SCE is in manual mode only. If the correct feedback is not received within the specified trouble delay time, trouble will be indicated within the toggle switch group and at the FACP or Network Control Annunciator. The trouble condition requires acknowledgment to silence the sounders at the FSCS and the FACP or Network Control Annunciator.

- **Existing/legacy SCS installations (includes Mode A):** Systems may be returned to the automatic condition by placing all SCS⁄SCE switches into the AUTO position and resetting the panel. Resetting the FACP and/or Network Control Annunciator is required after manual operation in Dedicated Systems and after a fire alarm condition in all systems. Reset of the FACP and/or Network Control Annunciator will be inhibited until all SCS⁄SCE switches are returned to the AUTO position.
- **NFS2-3030/NCA-2 Mode B systems:** Refer to Appendix C.2, “Mode B Operation”.

NOTE: A graphic representation for the location and function of each switch is to be mounted adjacent to the FSCS. This graphic representation must clearly identify each switch.

Non-dedicated System Operation

When HVAC equipment serves also to control smoke in an emergency, the system is classified as Non-dedicated. The FACP and/or Network Control Annunciator and SCS⁄SCE are responsible for the smoke control operation, while HVAC functions are controlled by other systems. The control of daily HVAC building management functions including AHU and dampers should not be a function of the FACP and/or Network Control Annunciator. The thermostat or building control signals connect directly to the motor control and do not pass through the FACP and/or Network Control Annunciator.

In Non-dedicated Systems, automatic control must be provided by other systems, and the AM2020/AFP1010 need not be programmed for receiving unit operation. Equations must be written to do the following for all control points present within a toggle switch group type:

1. Program the FACP using CBE equations to establish the automatic control state (when the Non-dedicated System is not controlling smoke) of all control points. All control points must be off.
2. Program the FACP using CBE equations which are activated during a fire. Activate control points as required to help contain smoke.

■ Automatic Control

Automatic control is established when all toggle switches are set to the AUTO position and no fire has been detected by the FACP. During automatic control, the building HVAC system or FACP may operate certain elements of the smoke control equipment independently of the FSCS.

■ Manual Control

Manual actions may be taken to override the automatic functions. Moving any switch on the SCS⁄SCE out of the automatic position (ON/OFF) will cause the FSCS to enter the manual control state. In this state, any further automatic operation is inhibited for the respective SCS⁄SCE.

According to the requirements of NFPA 92A, after the first alarm, automatic operation will be inhibited for the entire FSCS. Manual intervention is then required to make any changes to the state of smoke control points.

All smoke control elements (fans, dampers, etc.) must be installed with and provide feedback from all control and monitor points present in the toggle switch group type. Non-dedicated Systems use feedback to monitor system operation when the SCS⁄SCE is in manual mode only. If the correct feedback is not received within the specified delay time, trouble will be indicated within the toggle switch group and at the FACP or Network Control Annunciator. The trouble condition requires acknowledgment to silence the sounders at the FSCS and FACP or Network Control Annunciator.

- **Existing/legacy SCS installations (includes Mode A):** Systems may be returned to the automatic condition by placing all SCS⁄SCE switches into the AUTO position and resetting the panel. Resetting the FACP and/or Network Control Annunciator is required after manual operation in Dedicated Systems and after a fire alarm condition in all systems. Reset of the FACP and/or Network Control Annunciator will be inhibited until all SCS/SCE switches are returned to the AUTO position.
- **NFS2-3030/NCA-2 Mode B systems:** Refer to Appendix C.2, “Mode B Operation”.

NOTE: A graphic representation for the location and function of each switch is to be mounted adjacent to the FSCS. This graphic representation must clearly identify each switch.

3.8.2 Heating, Ventilating & Air Conditioning (HVAC) Mode

The HVAC Mode is enabled when dipswitch six on the SCS is in the OFF position (see Table 3.4). The main difference between the FSCS mode and the HVAC mode is the fact that the HVAC mode does not require both the control and verification of a particular device. For instance, in the HVAC mode a switch group can have the capability to open a damper but it does not have to verify whether it is open or closed. This difference adds six scenarios to the nine already defined. These 15 scenarios or switch group types are shown in .

In this mode, the piezoelectric sounder will never be activated. This mode of operation is not consistent with the UL and NFPA standards for Smoke Control Mode and should be used for HVAC and Non-Smoke Control purposes only. To ensure proper operation, it is important to correctly install the SCS⁄SCE associated control and monitor modules.

For fan control, the FACP would typically use two control modules for control and one monitor module to monitor. (The monitor module may be eliminated if no verification is desired). The switches can perform basic functions with only one control module and no monitor module, however, the switch will not be capable of true ON/AUTO/OFF control. For example, if only ON control is provided the activation of the $CON_{ON/OP}$CM will activate the device. Upon deactivation of the control module there is no guarantee the device will be deactivated. Either automatic operation or Manual OFF control must be sacrificed with only one control module.

NOTE: HVAC mode is not a listed Smoke Control function and should never be used as such. This is the only mode supported from the INA and the NFS-320 and NFS2-640
Refer to the “Restrictions” section of this manual for information on compatible software part numbers.
NFS-320, NFS2-640, NFS-640, NFS2-3030, NFS-3030, NCA and NCA-2s are only compatible with SCS software #SCS2.84 or higher.
They are not compatible with any 73XXX series software versions.
To use the SCS V4.0, NFS2-3030, and/or NCA-2 must be running software V21 or higher.

1	$VER_{OFF/CL}$	Verify when the fan is off (damper closed)
2	$VER_{ON/OP}$	Verify when the fan is on (damper open)
3	$VER_{ON/OP}$ and $VER_{OFF/CL}$	Verify when the fan is on and off (damper open and closed)
4	$CON_{OFF/CL}$	Turn a fan off (close a damper)
5	$CON_{OFF/CL}$ and $VER_{OFF/CL}$	Turn a fan off (close a damper) and verify when the fan is off (damper closed)
6	$CON_{OFF/CL}$ and $VER_{ON/OP}$	Turn a fan off (close a damper) and verify when the fan is on (damper open)
7	$CON_{OFF/CL}$, $VER_{ON/OP}$ and $VER_{OFF/CL}$	Turn a fan off (close a damper) and verify when the fan is on and off (damper open and closed)
8	$CON_{ON/OP}$	Turn a fan on (open a damper)
9	$CON_{ON/OP}$ and $VER_{OFF/CL}$	Turn a fan on (open a damper) and verify when the fan is off (damper closed)
10	$CON_{ON/OP}$ and $VER_{ON/OP}$	Turn a fan on (open a damper) and verify when the fan is on (damper open)
11	$CON_{ON/OP}$, $VER_{ON/OP}$ and $VER_{OFF/CL}$	Turn a fan on (open a damper) and verify when the fan is on and off (damper open and closed)
12	$CON_{ON/OP}$, $CON_{OFF/CL}$	Turn a fan on and off (open and close a damper)
13	$CON_{ON/OP}$, $CON_{OFF/CL}$ and $VER_{OFF/CL}$	Turn a fan on and off (open and close a damper) and verify when the fan is off (damper closed)
14	$CON_{ON/OP}$, $CON_{OFF/CL}$ and $VER_{ON/OP}$	Turn a fan on and off (open and close a damper) and verify when the fan is on (damper open)
15	$CON_{ON/OP}$, $CON_{OFF/CL}$, $VER_{ON/OP}$ and $VER_{OFF/CL}$	Turn a fan on and off (open and close a damper) and verify when the fan is on and off (damper open and closed)

Table 3.9 HVAC Mode Switch Group Types

SCS Dipswitch Settings for HVAC Mode

The tables on the pages that follow describe the dipswitch settings necessary to configure the SCS⁄SCE for many variations of heating, ventilating and air conditioning control. The same dipswitch settings and switch group layouts apply when an SCS is used without an SCE. Each description of a dipswitch setting follows the format shown below:

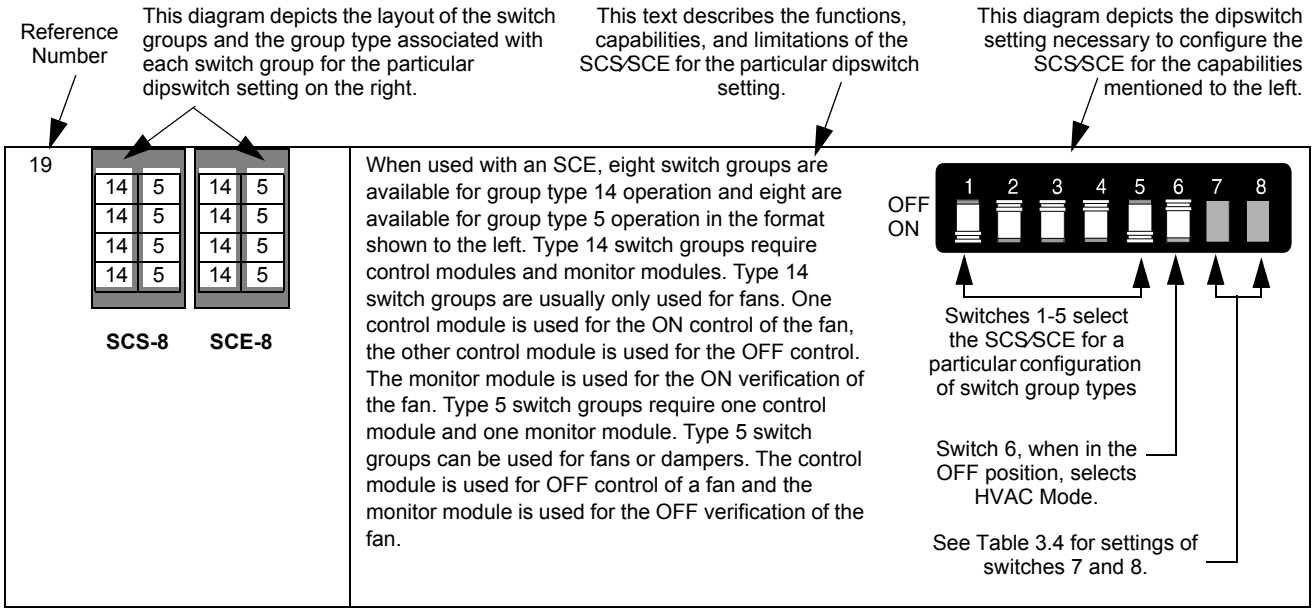

For instance, this particular dipswitch setting allows the SCS⁄SCE to function in the HVAC mode (dipswitch 6 in the OFF position). The setting for switches 1-5 not only select the HVAC group types of 14 and 5 but configure the switch group layout as shown to the left, where switch groups 1, 2, 3, 4, 9, 10, 11, and 12 are set for group type 8 operation and switch groups 5, 6, 7, 8, 13, 14, 15, and 16 are set for group type 1.

1 No Function - Factory Setting		The SCE will not function with dipswitches selected as shown on the right. This is a factory setting that must be changed in order for the SCS to function properly.
2	**SCS-8** **SCE-8**	When used with an SCE, all 16 switch groups are available for group type 1 operation. Type 1 switch groups require one monitor module. Type 1 switch groups can be used for fans or dampers. The monitor module is used for the OFF verification of the fan.
3	**SCS-8** **SCE-8**	When used with an SCE, all 16 switch groups are available for group type 2 operation. Type 2 switch groups require one monitor module. Type 2 switch groups can be used for fans or dampers. The monitor module is used for the ON verification of the fan.
4	**SCS-8** **SCE-8**	When used with an SCE, all 16 switch groups are available for group type 3 operation. Type 3 switch groups require two monitor modules. Type 3 switch groups are usually only used for dampers. One monitor module is used for the OPEN verification of the damper and the other monitor module is used for the CLOSED verification of the damper.
5	**SCS-8** **SCE-8**	When used with an SCE, all 16 switch groups are available for group type 4 operation. Type 4 switch groups require one control module. Type 4 switch groups can be used for fans or dampers. The control module is used for OFF control of a fan.
6	**SCS-8** **SCE-8**	When used with an SCE, all 16 switch groups are available for group type 5 operation. Type 5 switch groups require one control module and one monitor module. Type 5 switch groups can be used for fans or dampers. The control module is used for OFF control of a fan and the monitor module is used for the OFF verification of the fan.
7	**SCS-8** **SCE-8**	When used with an SCE, all 16 switch groups are available for group type 6 operation. Type 6 switch groups require one control module and one monitor module. Type 6 switch groups can be used for fans or dampers. The control module is used for OFF control of a fan and the monitor module is used for the ON verification of the fan.

Table 3.10 HVAC Mode Dipswitch Settings (1 of 5)

8	SCS-8: 7 7 / 7 7 / 7 7 / 7 7 SCE-8: 7 7 / 7 7 / 7 7 / 7 7	When used with an SCE, all 16 switch groups are available for group type 7 operation. Type 7 switch groups require one control module and two monitor modules. Type 7 switch groups are usually only used for dampers. The control module is used for CLOSED control of a damper, one monitor module is used for the OPEN verification of the damper and the other monitor module is used for the CLOSED verification of the damper. OFF ON 1 2 3 4 5 6 7 8
9	SCS-8: 8 8 / 8 8 / 8 8 / 8 8 SCE-8: 8 8 / 8 8 / 8 8 / 8 8	When used with an SCE, all 16 switch groups are available for group type 8 operation. Type 8 switch groups require one control module. Type 8 switch groups can be used for fans or dampers. The control module is used for ON control of a fan. OFF ON 1 2 3 4 5 6 7 8
10	SCS-8: 9 9 / 9 9 / 9 9 / 9 9 SCE-8: 9 9 / 9 9 / 9 9 / 9 9	When used with an SCE, all 16 switch groups are available for group type 9 operation. Type 9 switch groups require one control module and one monitor module. Type 9 switch groups can be used for fans or dampers. The control module is used for ON control of a fan and the monitor module is used for the OFF verification of the fan. OFF ON 1 2 3 4 5 6 7 8
11	SCS-8: 10 10 / 10 10 / 10 10 / 10 10 SCE-8: 10 10 / 10 10 / 10 10 / 10 10	When used with an SCE, all 16 switch groups are available for group type 10 operation. Type 10 switch groups require one control module and one monitor module. Type 10 switch groups can be used for fans or dampers. The control module is used for ON control of a fan and the monitor module is used for the ON verification of the fan. OFF ON 1 2 3 4 5 6 7 8
12	SCS-8: 11 11 / 11 11 / 11 11 / 11 11 SCE-8: 11 11 / 11 11 / 11 11 / 11 11	When used with an SCE, all 16 switch groups are available for group type 11 operation. Type 11 switch groups require one control module and two monitor modules. Type 11 switch groups are usually only used for dampers. The control module is used for OPEN control of a damper, one monitor module is used for the OPEN verification of the damper and the other monitor module is used for the CLOSED verification of the damper. OFF ON 1 2 3 4 5 6 7 8
13	SCS-8: 12 12 / 12 12 / 12 12 / 12 12 SCE-8: 12 12 / 12 12 / 12 12 / 12 12	When used with an SCE, all 16 switch groups are available for group type 12 operation. Type 12 switch groups require two control modules. Type 12 switch groups are usually only used for fans. One control module is used for OFF control of a fan and the other is used for ON control of the fan. OFF ON 1 2 3 4 5 6 7 8
14	SCS-8: 13 13 / 13 13 / 13 13 / 13 13 SCE-8: 13 13 / 13 13 / 13 13 / 13 13	When used with an SCE, all 16 switch groups are available for group type 13 operation. Type 13 switch groups require two control modules and one monitor module. Type 13 switch groups are usually only used for fans. One control module is used for OFF control of a fan and the other is used for ON control of the fan. The monitor module is used for the OFF verification of the fan. OFF ON 1 2 3 4 5 6 7 8

Table 3.10 HVAC Mode Dipswitch Settings (2 of 5)

15	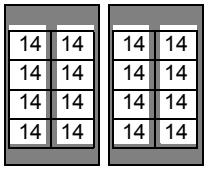 **SCS-8** **SCE-8**	When used with an SCE, all 16 switch groups are available for group type 14 operation. Type 14 switch groups require two control modules and one monitor module. Type 14 switch groups are usually only used for fans. One control module is used for OFF control of a fan and the other is used for ON control of the fan. The monitor module is used for the ON verification of the fan.
16	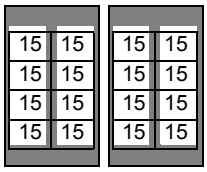 **SCS-8** **SCE-8**	When used with an SCE, all 16 switch groups are available for group type 15 operation. Type 15 switch groups require two control module and two monitor modules. Type 15 switch groups are usually only used when redundancy of fan verification or damper control is necessary. One control module is used for OFF control of a fan and the other is used for ON control of the fan. One monitor module is used for the OFF verification of the fan and the other is used for ON verification of the fan.
17	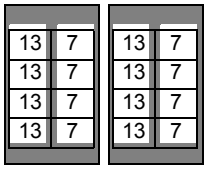 **SCS-8** **SCE-8**	When used with an SCE, eight switch groups are available for group type 13 operation and eight are available for group type 7 operation in the format shown to the left. Type 13 switch groups require two control modules and one monitor module. Type 13 switch groups are usually only used for fans. One control module is used for the ON control of the fan, the other control module is used for the OFF control. The monitor module is used for the OFF verification of the fan. Type 7 switch groups require one control module and two monitor modules. Type 7 switch groups are usually only used for dampers. The control module is used for CLOSED control of a damper, one monitor module is used for the OPEN verification of the damper and the other monitor module is used for the CLOSED verification of the damper.
18	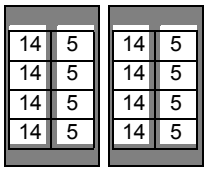 **SCS-8** **SCE-8**	When used with an SCE, eight switch groups are available for group type 14 operation and eight are available for group type 5 operation in the format shown to the left. Type 14 switch groups require two control modules and one monitor module. Type 14 switch groups are usually only used for fans. One control module is used for the ON control of the fan, the other control module is used for the OFF control. The monitor module is used for the ON verification of the fan. Type 5 switch groups require one control module and one monitor module. Type 5 switch groups can be used for fans or dampers. The control module is used for OFF control of a fan and the monitor module is used for the OFF verification of the fan.
19	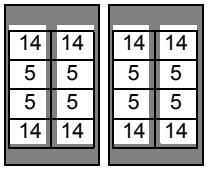 **SCS-8** **SCE-8**	When used with an SCE, eight switch groups are available for group type 14 operation and eight are available for group type 5 operation in the format shown to the left. Type 14 switch groups require two control modules and one monitor module. Type 14 switch groups are usually only used for fans. One control module is used for the ON control of the fan, the other control module is used for the OFF control. The monitor module is used for the ON verification of the fan. Type 5 switch groups require one control module and one monitor module. Type 5 switch groups can be used for fans or dampers. The control module is used for OFF control of a fan and the monitor module is used for the OFF verification of the fan. 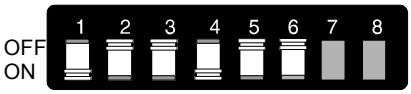
20	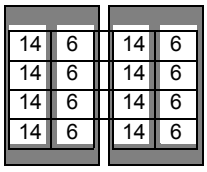 **SCS-8** **SCE-8**	When used with an SCE, eight switch groups are available for group type 14 operation and eight are available for group type 6 operation in the format shown to the left. Type 14 switch groups require two control modules and one monitor module. Type 14 switch groups are usually only used for fans. One control module is used for ON control of the fan, the other control module is used for the OFF control. The monitor module is used for ON verification of the fan. Type 6 switch groups require one control module and one monitor module. Type 6 switch groups can be used for fans or dampers. The control module is used for OFF control of a fan and the monitor module is used for the ON verification of the fan.

Table 3.10 HVAC Mode Dipswitch Settings (3 of 5)

21	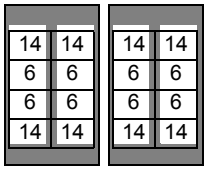 **SCS-8** **SCE-8**	 When used with an SCE, eight switch groups are available for group type 14 operation and eight are available for group type 6 operation in the format shown to the left. Type 14 switch groups require two control modules and one monitor module. Type 14 switch groups are usually only used for fans. One control module is used for the ON control of the fan, the other control module is used for the OFF control. The monitor module is used for the ON verification of the fan. Type 6 switch groups require one control module and one monitor module. Type 6 switch groups can be used for fans or dampers. The control module is used for OFF control of a fan and the monitor module is used for the ON verification of the fan.
22	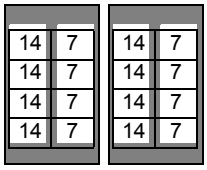 **SCS-8** **SCE-8**	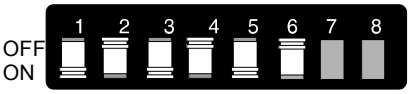 When used with an SCE, eight switch groups are available for group type 14 operation and eight are available for group type 7 operation in the format shown to the left. Type 14 switch groups require two control modules and one monitor module. Type 14 switch groups are usually only used for fans. One control module is used for the ON control of the fan, the other control module is used for the OFF control. The monitor module is used for the ON verification of the fan. Type 7 switch groups require one control module and two monitor modules. Type 7 switch groups are usually only used for dampers. The control module is used for CLOSED control of a damper, one monitor module is used for the OPEN verification of the damper and the other monitor module is used for the CLOSED verification of the damper.
23	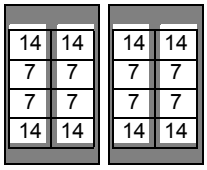 **SCS-8** **SCE-8**	 When used with an SCE, eight switch groups are available for group type 14 operation and eight are available for group type 7 operation in the format shown to the left. Type 14 switch groups require two control modules and one monitor module. Type 14 switch groups are usually only used for fans. One control module is used for the ON control of the fan, the other control module is used for the OFF control. The monitor module is used for the ON verification of the fan. Type 7 switch groups require one control module and two monitor modules. Type 7 switch groups are usually only used for dampers. The control module is used for CLOSED control of a damper, one monitor module is used for the OPEN verification of the damper and the other monitor module is used for the CLOSED verification of the damper.
24	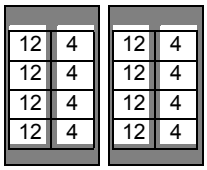 **SCS-8** **SCE-8**	 When used with an SCE, eight switch groups are available for group type 12 operation and eight are available for group type 4 operation in the format shown to the left. Type 12 switch groups require two control modules. Type 12 switch groups are usually only used for fans. One control module is used for OFF control of a fan and the other is used for ON control of the fan. Type 4 switch groups require one control module. Type 4 switch groups can be used for fans or dampers. The control module is used for OFF control of a fan.
25	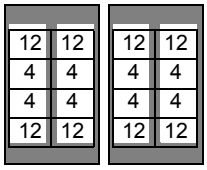 **SCS-8** **SCE-8**	 When used with an SCE, eight switch groups are available for group type 12 operation and eight are available for group type 4 operation in the format shown to the left. Type 12 switch groups require two control modules. Type 12 switch groups are usually only used for fans. One control module is used for OFF control of a fan and the other is used for ON control of the fan. Type 4 switch groups require one control module. Type 4 switch groups can be used for fans or dampers. The control module is used for OFF control of a fan.
26	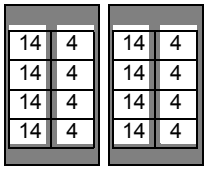 **SCS-8** **SCE-8**	 When used with an SCE, eight switch groups are available for group type 14 operation and eight are available for group type 4 operation in the format shown to the left. Type 14 switch groups require two control modules and one monitor module. Type 14 switch groups are usually only used for fans. One control module is used for the ON control of the fan, the other control module is used for the OFF control. The monitor module is used for the ON verification of the fan. Type 4 switch groups require one control module. Type 4 switch groups can be used for fans or dampers. The control module is used for OFF control of a fan.

Table 3.10 HVAC Mode Dipswitch Settings (4 of 5)

27	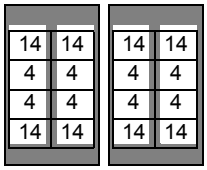 **SCS-8** **SCE-8**	When used with an SCE, eight switch groups are available for group type 14 operation and eight are available for group type 4 operation in the format shown to the left. Type 14 switch groups require two control modules and one monitor module. Type 14 switch groups are usually only used for fans. One control module is used for the ON control of the fan, the other control module is used for the OFF control. The monitor module is used for the ON verification of the fan. Type 4 switch groups require one control module. Type 4 switch groups can be used for fans or dampers. The control module is used for OFF control of a fan. 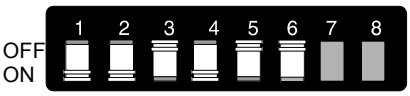
28	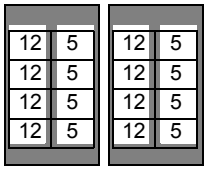 **SCS-8** **SCE-8**	When used with an SCE, eight switch groups are available for group type 12 operation and eight are available for group type 5 operation in the format shown to the left. Type 12 switch groups require two control modules. Type 12 switch groups are usually only used for fans. One control module is used for OFF control of a fan and the other is used for ON control of the fan. Type 5 switch groups require one control module and one monitor module. Type 5 switch groups can be used for fans or dampers. The control module is used for OFF control of a fan and the monitor module is used for the OFF verification of the fan.
29	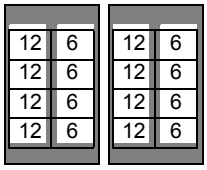 **SCS-8** **SCE-8**	When used with an SCE, eight switch groups are available for group type 12 operation and eight are available for group type 6 operation in the format shown to the left. Type 12 switch groups require two control modules. Type 12 switch groups are usually only used for fans. One control module is used for OFF control of a fan and the other is used for ON control of the fan. Type 6 switch groups require one control module and one monitor module. Type 6 switch groups can be used for fans or dampers. The control module is used for OFF control of a fan and the monitor module is used for the ON verification of the fan.
30	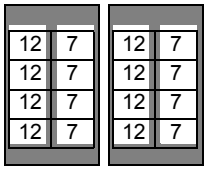 **SCS-8** **SCE-8**	When used with an SCE, eight switch groups are available for group type 12 operation and eight are available for group type 7 operation in the format shown to the left. Type 12 switch groups require two control modules. Type 12 switch groups are usually only used for fans. One control module is used for OFF control of a fan and the other is used for ON control of the fan. Type 7 switch groups require one control module and two monitor modules. Type 7 switch groups are usually only used for dampers. The control module is used for CLOSED control of a damper, one monitor module is used for the OPEN verification of the damper and the other monitor module is used for the CLOSED verification of the damper. 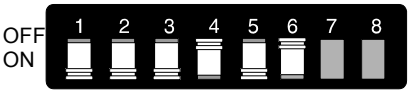
31	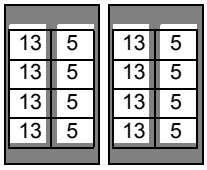 **SCS-8** **SCE-8**	When used with an SCE, eight switch groups are available for group type 13 operation and eight are available for group type 5 operation in the format shown to the left. Type 13 switch groups require two control modules and one monitor module. Type 13 switch groups are usually only used for fans. One control module is used for the ON control of the fan, the other control module is used for the OFF control. The monitor module is used for the OFF verification of the fan. Type 5 switch groups require one control module and one monitor module. Type 5 switch groups can be used for fans or dampers. The control module is used for OFF control of a fan and the monitor module is used for the OFF verification of the fan.
32	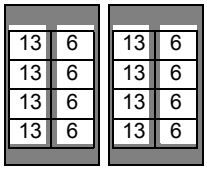 **SCS-8** **SCE-8**	When used with an SCE, eight switch groups are available for group type 13 operation and eight are available for group type 6 operation in the format shown to the left. Type 13 switch groups require two control modules and one monitor module. Type 13 switch groups are usually only used for fans. One control module is used for the ON control of the fan, the other control module is used for the OFF control. The monitor module is used for the OFF verification of the fan. Type 6 switch groups require one control module and one monitor module. Type 6 switch groups can be used for fans or dampers. The control module is used for OFF control of a fan and the monitor module is used for the ON verification of the fan.

Table 3.10 HVAC Mode Dipswitch Settings (5 of 5)

Toggle Switch Operation for HVAC Mode

■ HVAC ON/AUTO/OFF (OPEN/AUTO/CLOSED) Toggle Switch Operation

Each ON/AUTO/OFF toggle switch will function according to Table 3.11. Placing a toggle switch in the ON or OFF position will activate/deactivate the control points as shown. Once this has occurred, further control-by-event processing at the FACP is inhibited. .

NOTE: The AUTO position column in the table indicates the control point(s) condition when no Control-By-Event (CBE) activity is taking place

SWITCH GROUP TYPE	HVAC TOGGLE SWITCH POSITION		
	ON	AUTO	OFF
1	No Function	No Function	No Function
2	No Function	No Function	No Function
3	No Function	No Function	No Function
4	Deactivates $CON_{OFF/CL}CM$	Deactivates $CON_{OFF/CL}CM$	Activates $CON_{OFF/CL}CM$
5	Deactivates $CON_{OFF/CL}CM$	Deactivates $CON_{OFF/CL}CM$	Activates $CON_{OFF/CL}CM$
6	Deactivates $CON_{OFF/CL}CM$	Deactivates $CON_{OFF/CL}CM$	Activates $CON_{OFF/CL}CM$
7	Deactivates $CON_{OFF/CL}CM$	Deactivates $CON_{OFF/CL}CM$	Activates $CON_{OFF/CL}CM$
8	Activates $CON_{ON/OP}CM$	Deactivates $CON_{ON/OP}CM$	Deactivates $CON_{ON/OP}CM$
9	Activates $CON_{ON/OP}CM$	Deactivates $CON_{ON/OP}CM$	Deactivates $CON_{ON/OP}CM$
10	Activates $CON_{ON/OP}CM$	Deactivates $CON_{ON/OP}CM$	Deactivates $CON_{ON/OP}CM$
11	Activates $CON_{ON/OP}CM$	Deactivates $CON_{ON/OP}CM$	Deactivates $CON_{ON/OP}CM$
12	Activates $CON_{ON/OP}CM$ Deactivates $CON_{OFF/CL}CM$	Deactivates $CON_{ON/OP}CM$ Deactivates $CON_{OFF/CL}CM$	Deactivates $CON_{ON/OP}CM$ Activates $CON_{OFF/CL}CM$
13	Activates $CON_{ON/OP}CM$ Deactivates $CON_{OFF/CL}CM$	Deactivates $CON_{ON/OP}CM$ Deactivates $CON_{OFF/CL}CM$	Deactivates $CON_{ON/OP}CM$ Activates $CON_{OFF/CL}CM$
14	Activates $CON_{ON/OP}CM$ Deactivates $CON_{OFF/CL}CM$	Deactivates $CON_{ON/OP}CM$ Deactivates $CON_{OFF/CL}CM$	Deactivates $CON_{ON/OP}CM$ Activates $CON_{OFF/CL}CM$
15	Activates $CON_{ON/OP}CM$ Deactivates $CON_{OFF/CL}CM$	Deactivates $CON_{ON/OP}CM$ Deactivates $CON_{OFF/CL}CM$	Deactivates $CON_{ON/OP}CM$ Activates $CON_{OFF/CL}CM$

Table 3.11 HVAC Toggle Switch Function

Switch Group LEDs for HVAC Mode

The three LEDs associated with each SCS/SCE toggle switch or contact function according to Table 3.12.

SWITCH GROUP TYPE	Green LED turns ON when...	Yellow LED turns ON when...	Amber LED turns ON when...
1	$VER_{OFF/CL}$MM Deactivates	$VER_{ON/OP}$MM Activates	see HVAC Trouble Conditions
2	$VER_{ON/OP}$MM Activates	$VER_{ON/OP}$MM Deactivates	see HVAC Trouble Conditions
3	$VER_{ON/OP}$MM Activates	$VER_{ON/OP}$MM Activates	see HVAC Trouble Conditions
4	$CON_{OFF/CL}$CM* Deactivates	$CON_{OFF/CL}$CM* Activates	see HVAC Trouble Conditions
5	$VER_{OFF/CL}$MM Deactivates	$VER_{ON/OP}$MM Activates	see HVAC Trouble Conditions
6	$VER_{ON/OP}$MM Activates	$VER_{ON/OP}$MM Deactivates	see HVAC Trouble Conditions
7	$VER_{ON/OP}$MM Activates	$VER_{ON/OP}$MM Activates	see HVAC Trouble Conditions
8	$CON_{ON/OP}$CM* Activates	$CON_{ON/OP}$CM* Deactivates	see HVAC Trouble Conditions
9	$VER_{OFF/CL}$MM Deactivates	$VER_{ON/OP}$MM Activates	see HVAC Trouble Conditions
10	$VER_{ON/OP}$MM Activates	$VER_{ON/OP}$MM Deactivates	see HVAC Trouble Conditions
11	$VER_{ON/OP}$MM Activates	$VER_{ON/OP}$MM Activates	see HVAC Trouble Conditions
12	$CON_{ON/OP}$CM* Activates	$CON_{OFF/CL}$CM* Activates	see HVAC Trouble Conditions
13	$VER_{OFF/CL}$MM Deactivates	$VER_{ON/OP}$MM Activates	see HVAC Trouble Conditions
14	$VER_{ON/OP}$MM Activates	$VER_{ON/OP}$MM Deactivates	see HVAC Trouble Conditions
15	$VER_{ON/OP}$MM Activates	$VER_{ON/OP}$MM Activates	see HVAC Trouble Conditions
*When there is a switch group type selected without verification capability (types 4, 8, and 12), the SCS automatically annunciates the state that the control module for that group is in.			

Table 3.12 HVAC Toggle Switch Group LED Operation)

■ HVAC Trouble Conditions

When an SCS/SCE trouble condition exists, the type of trouble can be identified on the SCS/SCE modules by a series of one or more LED flashes (trouble codes) as described in this section.

■ HVAC Module Trouble

A trouble affecting the entire SCS/SCE is called a module trouble condition. A module trouble may occur for any of the following reasons:

- Communication is lost with the FACP. All amber trouble LEDs will flash rapidly. During this condition, an annunciator communication fault will be displayed at the control panel. (COMM LOSS)

  Example: Trouble with the EIA-485 communication loop or incorrect address selection.
- Annunciator points 33-64

  For AM2020/AFP1010 only: Annunciator points 33 - 64 are not programmed as type ID ACON and an SCE is not connected or responding to the SCS. All yellow LEDs will flash rapidly. During this condition, an expander trouble will be displayed at the control panel. During this condition, an expander trouble will be displayed at the control panel.
- NF2S-3030, NFS-320/NFS2-640 with NCA-2, or NFS2-3030 with NCA-2: Annunciator points 33 - 64 are not programmed to an unused output point and the SCE-8 is not connected. All yellow LEDs will flash rapidly. (EXPANDER CONFIG)
- Dipswitch positions 1 - 6 are OFF (factory default setting). All green LEDs will flash rapidly and the piezo will sound. During this condition an expander trouble will be displayed at the control panel. Pressing the Local Acknowledge/Lamp Test switch will silence the piezo. (DIP SW DEFAULT)
- For SCS v4.0 or higher (requires NFS2-3030 and/or NCA-2 v.21 or higher); Dipswitch position 6 (HVAC/FSCS) does not match the panel configuration in ACS programming (HVAC/FSCS). (MODE CONFIG)

■ HVAC Toggle Switch Group Trouble

A toggle switch group trouble condition applies to a single toggle switch and its four annunciator points. HVAC toggle switch group trouble conditions are defined as follows:

- A trouble condition exists for one or more of the four devices programmed to annunciate at that specific toggle switch. The respective trouble LED will blink once, followed by a pause, then repeat until acknowledged. (DEVICE TROUBLE)

  Example: Open circuit or loss of communication with a module.
- For AM2020/AFP1010 only: Annunciator software type ID does not match the associated toggle switch function. The respective trouble LED will blink twice, followed by a pause, then repeat until acknowledged. During this condition an external trouble is annunciated at the control panel.

  Example: A1P1 is AMON but should be ACON since the first annunciator point associated with the first toggle switch in the SCS/SCE is expected to perform a control function (i.e. AMON programmed for a control point).
- NF2S-3030, NFS-320/NFS2-640 with NCA-2, or NFS2-3030 with NCA-2: (Similar to the AM2020/AFP1010). Annunciator point is not mapped to a device of the proper type ID.The respective trouble LED will blink twice, followed by a pause, then repeat until acknowledged. During this condition an external trouble is annunciated at the control panel. (DEVICE MISMATCH)

Example: A1P1 is mapped to point N1L1M1 (monitor) but should be mapped to a valid “control” module.

- Annunciator point activity or trouble occurs for an annunciator point which was not programmed to be active according to the group type. The respective trouble LED will blink three times, followed by a pause, then repeat until acknowledged. During this condition an external trouble is annunciated at the control panel. (DIP SW MISMATCH)

  Example: A group is programmed as type 10 ($CON_{ON/OP}$ and $VER_{ON/OP}$), but the off control point indicates an invalid reply. Check group programming and annunciator point mapping.

HVAC toggle switch group troubles are acknowledged by pressing the Local Acknowledge/Lamp Test switch, at which time any flashing trouble LEDs will turn on steady. The LED group trouble codes may be reset by pressing the Local Acknowledge/Lamp Test switch for at least five seconds. When the trouble is cleared, the respective trouble LED will turn off.

3.9 Programming

3.9.1 NFS2-3030, NFS-320, NFS2-640, and NCA-2

Any mode of operation for SCS modules can be used when the modules are installed:

- on an NFS2-3030 ACS circuit and linked to NFS2-3030 monitor and control modules;
- on an NCA ACS circuit for use with NFS-640 and linked to the NFS-640 monitor and control modules using the network annunciator menu or the Veri•Fire Tools Programming Utility.
- on an NCA-2 ACS circuit for use with NFS2-3030, NFS2-640 or NFS-320 monitor and control modules using the network annunciator menu or the Veri•Fire Tools Programming Utility.

NOTE: The NF2S-3030 and NCA-2 each provide 32 more annunciator points (points 65 - 96) per FSCS mode annunciator address than legacy panels. Any or all of these extra points may be used to activate FSCS mode priority from the NFS2-3030 or the NCA-2. When one of these points is programmed to a panel zone containing smoke control points, or to a single smoke control device, activation of the zone or device will cause subsequent automatic events to be locked out. Smoke control can then only be overridden manually. When FSCS is configured for Pairing and CBE lockout is required, only program points 65-96 on the first SCS module.

Prior to programming, the following steps must be taken.

1. SCS modules must be installed on the ACS circuit, then configured. (See Section 3.4.7, “Dipswitch Setting” and Section 3.4.8, “EIA-485 Addressing” of this manual.) Using Worksheet 2 at the end of this manual, note the switch group type assigned to each switch group.
2. Using Worksheet 2, assign each SCS annunciator point a value of “needed”, “unneeded”, or “unused”. “Needed” points are those within each switch group of four annunciator points that match the capabilities of the switch group type. Those points classified as “unneeded” do not match the capabilities of the switch group type. “Unused” points are associated with switch groups that are not used. It will be necessary to know these values for programming.
3. Monitor and control modules must be wired on the panel SLC as illustrated in Section 5 “Ratings and Wiring Diagrams” of this manual, addressed and programmed as non-silenceable as described in the panel manual. The following Software Type IDs must be used.

Type of Device	Software Type ID
Control Relay Module	RELAY or NONRESET CTL*
Monitor Module	NON FIRE
*Use NONRESET CTL only in HVAC mode without CBE lockout	

When the SCS modules are installed and configured, worksheets are filled out, SLC wiring is complete, and monitor and control modules have been addressed and given the proper Software Type IDs, the programmer must:

- map each “needed” annunciator point to the proper control module or monitor module by creating a user-defined group. “Unneeded” annunciator points require no mapping.
- map each “unused” annunciator point to a valid unused control point that will not be activated by any CBE and is programmed as non-silenceable. N000L01M001 can be used as the valid unused control point. NOTE: When FSCS mode is used for NCA smoke control modules, use *only* N000L01M001 to program each “unused” annunciator point in ACS programming.

  Refer to Figure 3.29 and Figure 3.31 and accompanying text for instructions.
- FSCS mode only - map annunciator points from 65 through 96 to a panel smoke control zone or device as needed.

Programming may be done for the NFS2-3030 by using the panel keypad, the network annunciator keypad, or the Veri•Fire Programming Utility. Programming may be done for the NFS-320/NFS2-640 by using the NCA-2 keypad or the Veri•Fire Programming Utility.

3.9.2 NFS2-3030 and NCA-2/NFS2-640/NFS-320 Programming

Using the NFS2-3030 or NCA-2 keypad, enter ACS Programming (refer to Figure 3.30). Move the cursor between fields with the arrows on the keyboard. When the cursor is in the proper address field, press the soft keys as described below.

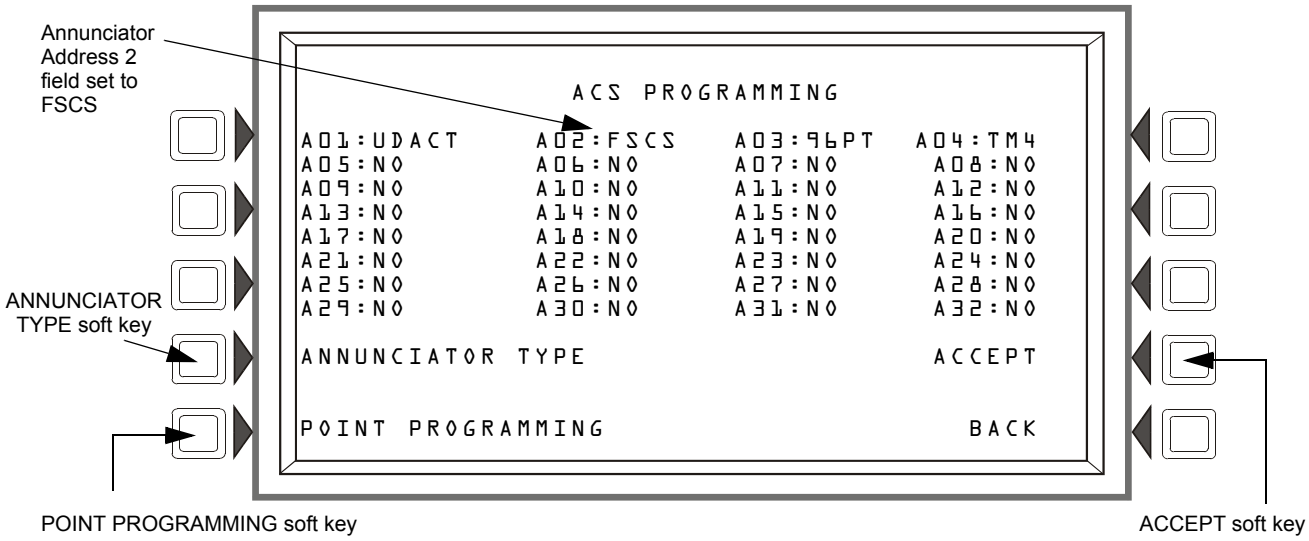

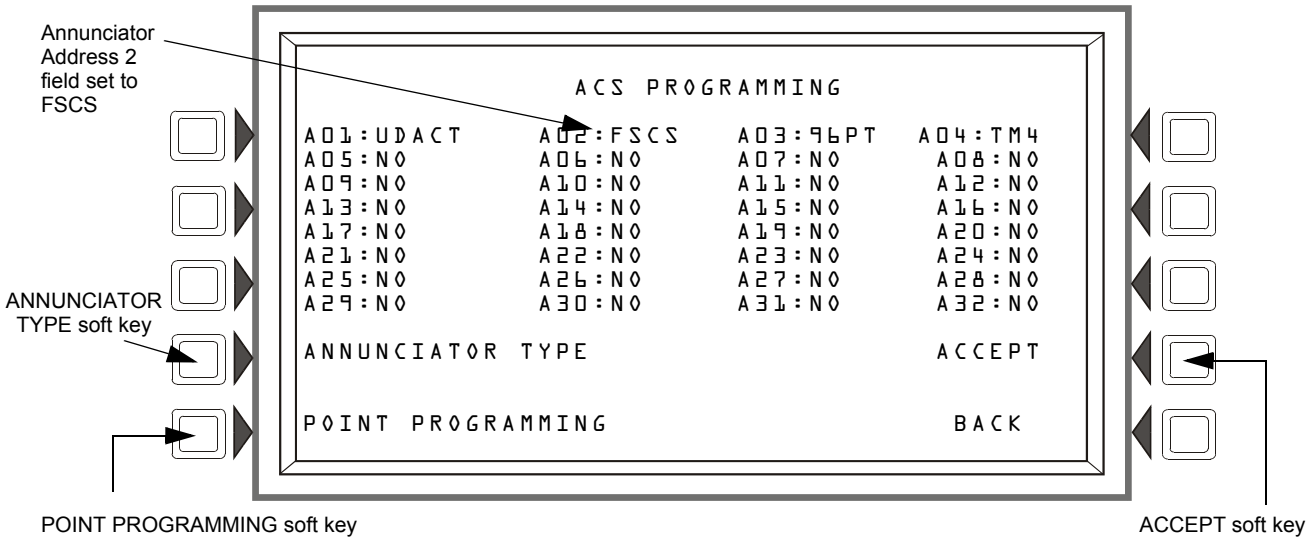

Figure 3.28 ACS Programming Address Screen, NFS2-3030 and NCA-2

■ Soft Keys

ANNUNCIATOR TYPE: Press until "FSCS" or "HVAC" appears in the field (the underlined area) to the right of the address. **Note:** When the smoke control modules are set for FSCS mode, points 65 through 96 are automatically generated for use in FSCS mode prioritization.

ACCEPT: Press to save the entry.

POINT PROGRAMMING: Press to bring up the ACS Point Programming screen. The point programming screen allows the programmer to assign a mode and source to each annunciator point at the annunciator address.

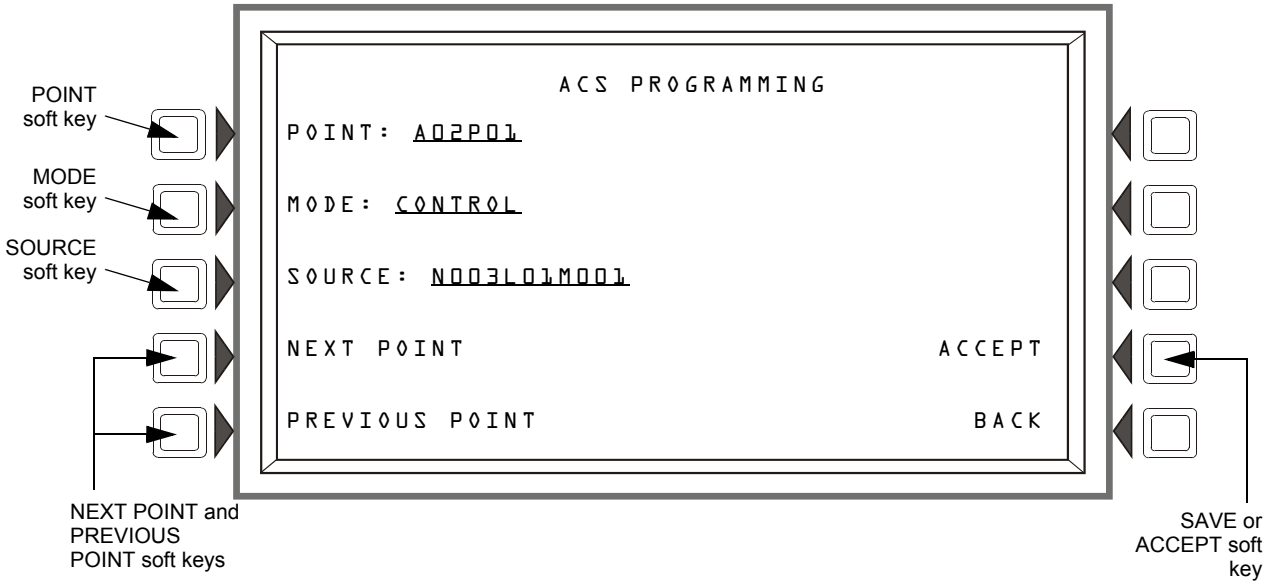

Figure 3.29 ACS Point Programming Screen, NFS2-3030 and NCA-2

■ Soft Keys

POINT: Press this soft key to enter the ACS point number. The format is AxxPyy, where xx is the two-digit annunciator address, and yy is the two-digit annunciator point number. Note that "Unneeded" points require no programming and may be skipped.

MODE: Press until the desired mode appears onscreen. The mode must be MONITOR for a "Needed" point being mapped to a monitor module, and CONTROL for a "Needed" point being mapped to a control module. The mode for "Unused" annunciator points must be CONTROL, witha SOURCE entry of a valid unused control point (See SOURCE below). All "Unused" annunciator points can reference the same control point.

For FSCS mode only: The 32 annunciator points (65 through 96) used for initiating CBE lockout may be programmed in any order: the MODE must be MONITOR. Any of these points that is not used requires no programming and should be set to a mode of "NONE".

SOURCE: This soft key will appear once the mode has been entered. Press until the following format appears: NxxxLyyMzzz, where xxx is the network node number, yy is the panel SLC number, and zzz is the module SLC address number. Enter the address of the source device.

When the smoke control modules are programmed for FSCS mode, give each "Unused" annunciator point a SOURCE of N000L01M001.
For FSCS mode only: The 32 annunciator points (65 through 96) used for initiating CBE lockout may be programmed in any order: the MODE must be MONITOR. Any of these points that is not used requires no programming and should be set to a mode of "NONE".

SAVE or ACCEPT: Press this soft key to save the entries, then press the NEXT POINT soft key to program the next point.

Veri•Fire Tools Programming

Veri•Fire screens for NCA-2 and NFS2-3030 ACS address and point programming are similar in appearance. The example screens shown below are NCA-2 screens: the address and point fields, as well as the pull-down menus, provide the same choices required for SCS programming as the NFS2-3030 screens.

Using Veri•Fire, click on the ACS Address Maps tab of the initial ("System Programming") screen. This tab will show annunciator addresses one through 32 (A1 - A32). Click on the pull-down menu for the appropriate address. Choose "64 pt FSCS" for FSCS mode, or "64 pt ACS" for HVAC mode. The button for that address lights after a choice has been made from the pull-down menu. Click on the button to bring up the ACS Points tab. **Note:** For FSCS mode, choosing "64 pt FSCS" will automatically generate points 65 through 96 for use in FSCS mode prioritization.

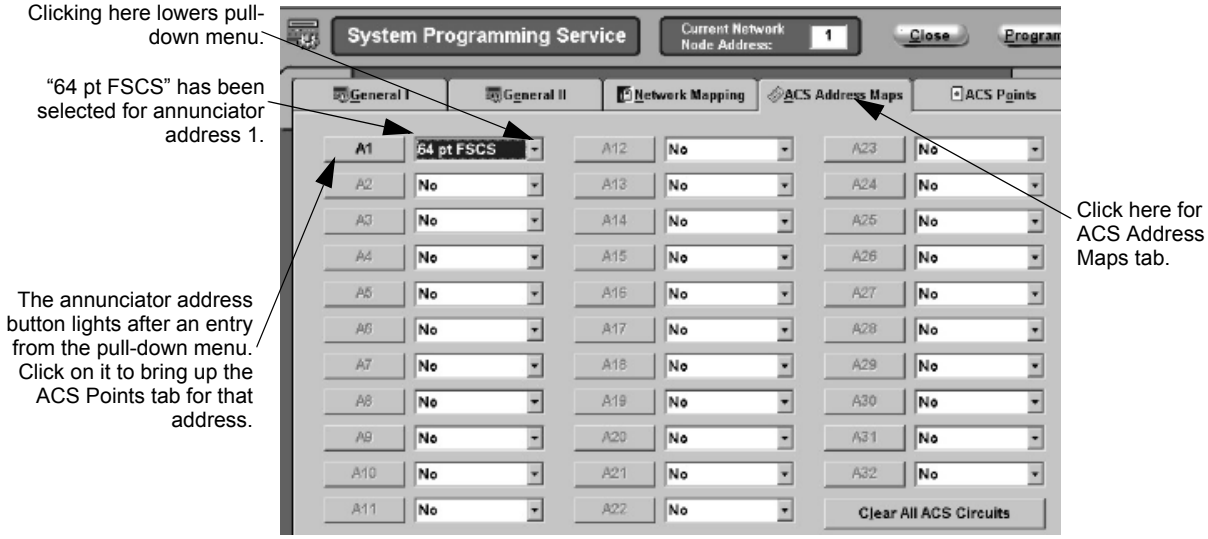

Figure 3.30 ACS Address Maps Screen

The ACS Points screen displays annunciator points for the annunciator address defined in the "ACS Address Maps". In the previous screen, A1 - address one on an ACS circuit - was defined as "64 pt FSCS". The ACS Points tab screen will display all 64 points associated with A1, plus addresses 65 through 96 for use in FSCS mode.

A "Function" and "Source" field entry must be made for each of the first 64 annunciator points that are classified as "Needed" or "Unused". No entry should be made for annunciator points classified as "unneeded". Refer to the notations for Figure 3.29 below for field entries.

NOTE: An "Unused" annunciator point must have a "Source" entry of a valid unused control point that will not be activated by any CBE, and is programmed as non-silenceable. The function must be "Control". For FSCS only: program unused network node number = 000 in the "Source" field when smoke control modules are on an NCA ACS circuit. All "unused" annunciator points can reference the same control point.

For FSCS mode only: The 32 annunciator points (65 through 96) used for initiating CBE lockout may be programmed in any order. The programmed points must have a FUNCTION of MONITOR. Any of these points that are not used should not be programmed (no "Function" or "Source" entry should be made).

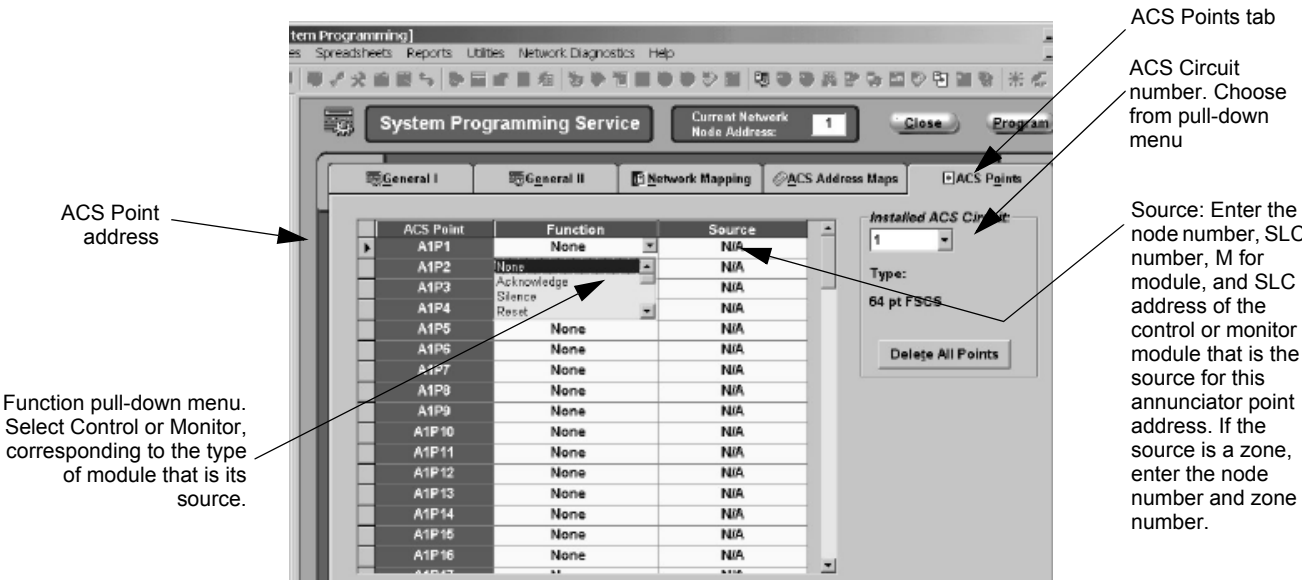

Figure 3.31 ACS Points Screen

3.9.3 NFS-320/NFS2-640 Programming (HVAC Mode, No CBE Lockout)

When smoke control modules are connected to the NFS-320 or NFS2-640 EIA-485 circuit (not to a Network Control Annunciator), the modules may be programmed for HVAC mode only, without CBE lockout. The panel programming is performed using the Veri•Fire Programming Utility. Prior to Veri•Fire programming, the following steps must be taken.

1. SCS modules must be configured and installed. (See Section 3.4.7, “Dipswitch Setting” and Section 3.4.8, “EIA-485 Addressing” of this manual.) Note that dipswitches 6 and 7 must be set to OFF for HVAC mode and to disable CBE lockout. Using Worksheet 2 at the end of this manual, note the switch group type assigned to each switch group.
2. Using Worksheet 2, assign each SCS annunciator point a value of “needed”, “unneeded”, or “unused”. Those points classified as “needed” are those within each switch group of four annunciator points that match the capabilities of the switch group type. Those points classified as “unneeded” are those within each switch group of four annunciator points that do not match the capabilities of the switch group type. Unused points are associated with switch groups that are not used. It will be necessary to know these values during Veri•Fire programming.
3. Monitor and control modules must be wired on the panel SLC as illustrated in Section 5 “Ratings and Wiring Diagrams” of this manual, and addressed as described in the panel manual. The following Software Type IDs must be used.

Type of Device	Software Type ID
Control Relay Module	RELAY or NONRESET CTL*
Monitor Module	NON FIRE
*Use only in HVAC mode without CBE lockout	

When the SCS modules are installed and configured, worksheets are filled out, SLC wiring is complete, and monitor and control modules have been addressed and given the proper Software Type IDs, the programmer must

- map each “needed” annunciator point to the proper control module or monitor module by creating a user-defined group. “Unneeded” annunciator points require no mapping.
- map each “unused” annunciator points to any valid control point that will not be used for any other purpose.

Veri•Fire Programming

Using Veri•Fire with the NFS-320 or NFS2-640, click on the Point Programming icon in the Main Services column of the initial (“System Programming”) screen.

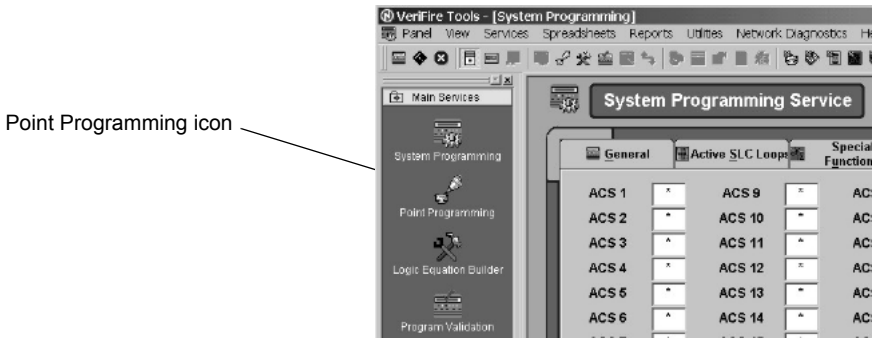

Figure 3.32 System Programming Screen

This will bring up the Point Programming Service Screen. Click on the “Prog. ACS Groups” tab. The following screen will appear.

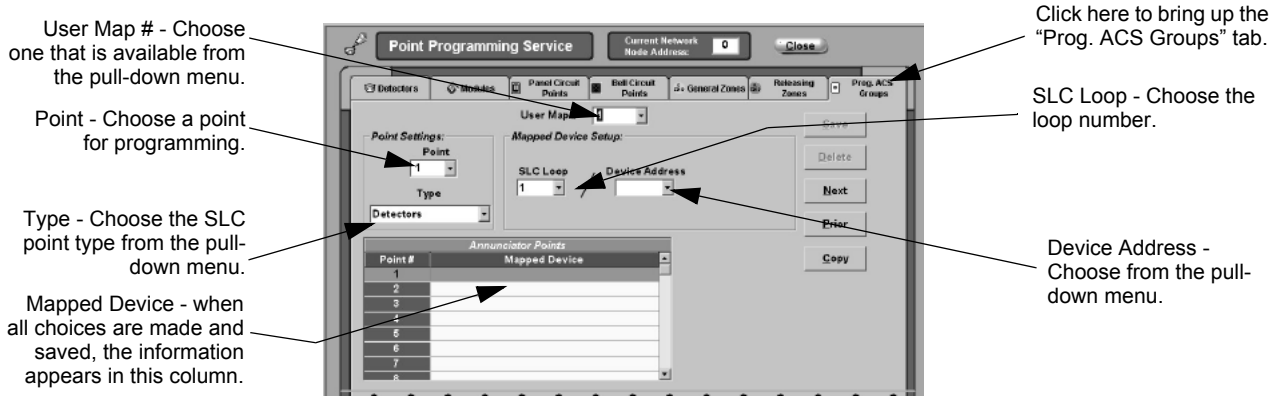

Figure 3.33 Point Programming Screen, Prog. ACS Groups Tab

Set up a user-defined group (User Map #1 is shown above) by choosing entries as indicated in the above figure for each “needed” annunciator point. “Unused” annunciator points must be mapped to a valid control point that will not be used for any other function. “Unneeded” annunciator points require no programming; the “Mapped Device” field should be left blank.

When points are all mapped, return to the System Programming screen and click on the “ACS Address Maps” tab. Check the ACS box at right. Enter the user-defined group number (User Map #) in the appropriate annunciator address box.

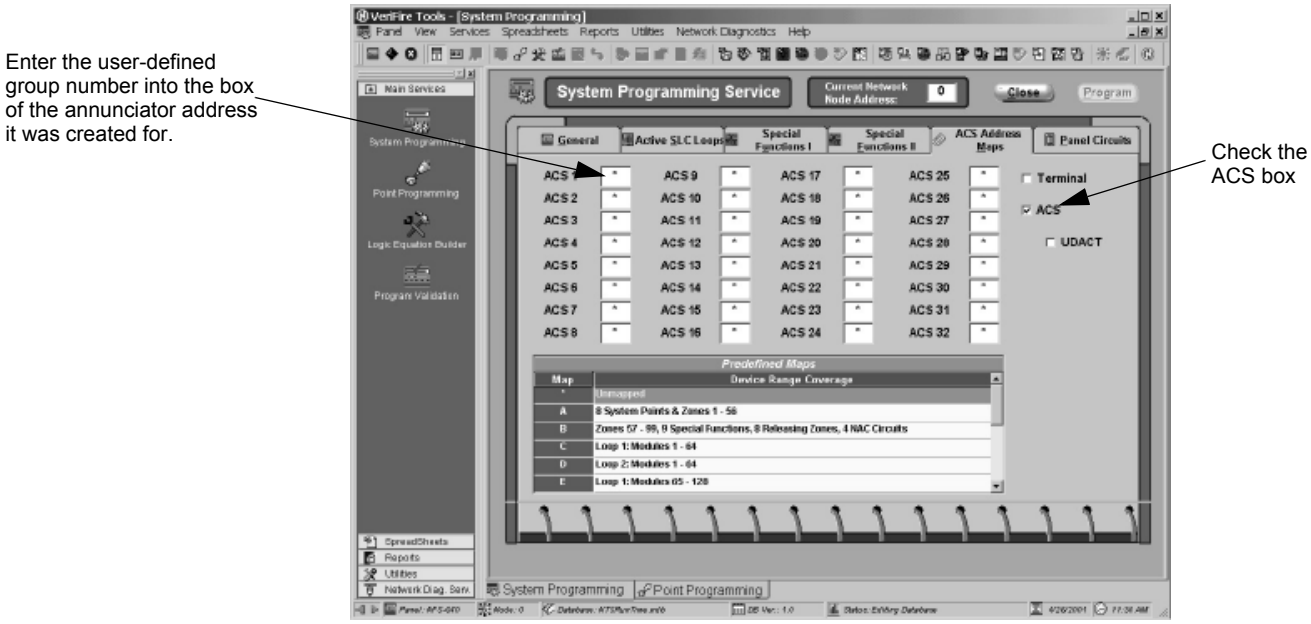

Figure 3.34 System Programming, ACS Address Maps Screen

3.9.4 INA Programming (Legacy Systems)

The INA supports HVAC mode without manual control. With the INA, an SCS is programmed as an annunciator. Refer to the INA manual for instructions.

The following programming notes apply:

- When using an SCS connected to an INA:
  Each point within a switch group (4 annunciator points) must be shadowed to the same fire alarm control panel.
- When using the SCE connected to an INA with multiple fire panel mapping:
  Loss of communications between the SCS and one of the control panels can cause failure of the entire SCS/SCE annunciator. Do not use this configuration if independent control is required.

3.9.5 AM2020/AFP1010 Programming (Legacy Systems)

Because the SCS Series Smoke Control Station works in conjunction with the AM2020/AFP1010 FACP, programming of the FACP is required for proper operation of the SCS. The installer must program the FACP with the following information:

1. The appropriate EIA-485 device address for the SCS
2. The necessary EIA protocol points for the respective address, including software type ID
3. The required control and monitor modules, including control-by-event equations, software type ID, and EIA-485 protocol point mapping
4. All inputs that will initiate smoke control must be mapped to Z240.

Each of the items above require the designer to enter the programming mode of the AM2020/AFP1010 FACP. In order to enter the programming mode, the level 2 password for the FACP is necessary. The programming mode of the FACP is accessed by keying in the following sequence on the keypad:

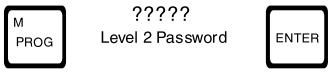

Once in the programming mode, the display will show the Main Programming Menu:

```
PRESS 1=PSYS,2=FSYS,3=PPRG,4=FPRG,5=REMV,6=PSWD,7=MSG,8=HIS
```

There are only three options that will be needed to program the FACP for the SCS/SCE:

1=PSYS Partial System Programming - Selective programming of system-wide functions (number of LIBs, ISIB, Signal-Silence Inhibit and Cut-out, Alarm Verification, number of annunciator modules, etc.). Partial system programming will be used for programming of the SCS address.

3=PPRG Partial Point Programming - Selectively altering the operating parameters of SLC Loop devices, software-defined zones and annunciator points. Several suboptions under partial point programming can be used to program or update programming of software type IDs, Control-By-Event (CBE), and EIA-485 protocol point mapping for modules or protocol points.

4=FPRG Full Point Programming - Complete programming of addressable SLC Loop devices (control and monitor modules), software-defined zones, EIA-485 protocol points and their respective operating parameters. Full point programming should be used for initial programming of EIA-485 protocol points and modules associated with the smoke control system.

NOTE: To properly implement weekly testing of the smoke control system (required for dedicated systems by NFPA 92A), the AM2020/AFP1010 must be programmed for receiving unit operation. This ensures that troubles encountered during the weekly testing will be displayed for the operator at conclusion of testing.
Each option under Partial or Full Point Programming prompts the programmer to enter the address of the detector, module, zone, or annunciator point to be affected. Leading zeros are not required. The address assumes the following format:

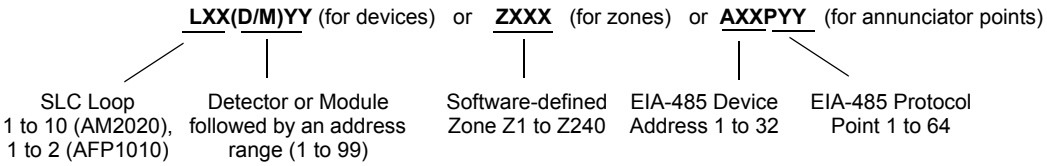

Example: For the 44th module on SLC Loop 3, enter **L3M44.**

EIA-485 Device Addressing

Once the two rotary decimal switches are set on each SCS, the EIA-485 device address must be installed in the FACP memory so that data can be routed properly. After entering the programming mode, select option 1, partial system programming, of the Main Programming Menu by pressing the following keys at the prompt:

■ 1=PSYS

Option 1 from the Main Programming menu allows the programmer to change the programming of system-wide functions. After selecting option 1 from the Main Programming menu, the display will show the Partial System Programming submenu:

```
PRESS 1=INST,2=STY,3=TDLY,4=AVPS,5=ZBND,6=EXTEQ,7=LOCP,8=ISIB,9=PARM,0=CONT   :
```

The Partial System Programming submenu has nine options, but only option 8 will be needed:

8=ISIB Intelligent Serial Interface Board - Installation or removal of the Intelligent Serial Interface Board, annunciator modules or EIA-485 devices.

When uninstalling annunciator modules, all installed points on the affected annunciators must be removed first for proper system operation.

After entering Partial System Programming, select option 8, Intelligent Serial Interface Board, by pressing the following keys at the prompt:

■ 8=ISIB

Option 8 from the Partial System Programming Menu allows the programmer to change parameters associated with an Intelligent Serial Interface Board (ISIB). An intelligent SIB is either a SIB-2048A or a SIB-NET. ISIB Programming has three submenu options, ISIB Installation, Annunciator Installation and External Interface Parameters. The only option needed for SCS/SCE programming is option 2, Annunciator Installation. Even though the SCS/SCE is not an annunciator, it is an EIA-485 device which communicates with the FACP in the same manner as an annunciator.

Option 2, Annunciator Installation, is accessed by pressing the following keys at the prompt:

■ 2=ANN - Annunciator Installation

This option allows the installation or removal of annunciators (EIA-485 devices) from the AM2020/AFP1010 memory. The modules must still be physically installed or removed from the system to prevent a system trouble condition. The following programming example illustrates the installation of an SCS-8 at address 11.

```
PRESS 1=INSTL,2=ANN,3=XINT,4=DACT                                  : 2
ENTER THE ANNUNCIATOR NUMBER TO CHANGE (1 - 32)                    : 11
IS ANNUNCIATOR 01 TO BE INSTALLED IN SYSTEM? (Y=YES,N=NO)          : Y
ENTER 20 CHARACTER CUSTOM LABEL                     : SCS ONE
DO YOU WANT TO CHANGE ANOTHER ANNUNCIATOR? (Y=YES,N=NO)            : N
PROGRAMMING COMPLETE  -  POWER DOWN TO MAKE APPROPRIATE CHANGES
```

For more information on programming the annunciator address for the FACP, refer to Chapter 3, Section 1.1.8 Intelligent Serial Interface Board Programming, of *The AM2020/AFP1010 Manual.*

NOTE: Software Part Numbers 73631 and 73845 are not compatible with INA combinations after M2.7. Part #SCSV2.84 is not compatible with FACP/INA combinations prior to M2.8.

Annunciator Point Programming

Each of the 64 points for a specific address should be separated into three groups: those that are needed, those that are unneeded, and those that are unused. Needed points are those points within each switch group that match the capabilities of the switch group type. Unneeded points are those points in each switch group that do not match the capabilities of the switch group type. Unused points are those point associated with switch groups that are unused.

Only points classified as needed or unused need to be defined in FACP memory: unneeded points do not get defined in FACP memory. The points to be defined must be programmed into FACP memory and a software type identification must be declared for each. A software type ID allows the FACP to identify the type and configuration of the equipment associated with the point. Points classified as needed are assigned software type IDs as defined in Table 3.13. Unused points are assigned the software type ID ACON. All unneeded points do not get assigned a software type ID.

EIA-485 Protocol Point	Software Type ID	Type of Device
$CON_{ON/OP}$ or $CON_{OFF/CL}$	ACON	Annunciator point that indicated the state of any CM control module.
	AFCM	Annunciator point that is not deactivated upon system reset. This type ID is only used when a CM is used as a Form-C relay.
$VER_{ON/OP}$ or $VER_{OFF/CL}$	AMON	Annunciator point that indicated the state of any MM monitor module.

Table 3.13 Annunciator Point Software Type IDs

NOTE:

1. If a toggle switch group number is not to be used, program all four associated annunciator points as software type ACON.
2. If an SCE is not used, program the associated annunciator points (33 through 64) as software type ACON for the respective SCS address.
3. If one or more of the four annunciator points are not selected for any toggle switch groups (unneeded), do not install the respective annunciator point address(es).
4. When using software type ID AFCM for a $CON_{ON/OP}$ or $CON_{OFF/CL}$ annunciator point, the software type ID for the appropriate control module must be FRCM.
5. When changing functions of a switch group, and subsequently the protocol points, make sure to install those points that were previously unneeded and remove those points that were previously needed.

Programming of the software type ID for all necessary points can be accomplished through either Partial Point Programming or Full Point Programming. Partial Point Programming is explained below, Full Point Programming is explained in Section 3.9.3 “NFS-320/NFS2-640 Programming (HVAC Mode, No CBE Lockout)”.

Partial Point Programming

After entering the programming mode, select option 3, partial point programming, of the Main Programming Menu by pressing the following keys at the prompt:

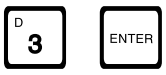

■ 3=PPRG

Option 3 from the Programming Menu allows the programmer to change the operational parameters of SLC Loop devices, software-defined zones, and EIA-485 protocol points.

After selecting option 3 from the Main Programming menu, the display will show the Partial Point Programming submenu:

```
PRESS 1=TYPID,2=CBE,3=LBL,4=OPTNS,5=AMAP,6=CCBE                    :
```

The Partial Point Programming submenu has five options, where:

1=TYPID Type ID - Changing the software type identification of SLC Loop devices, zones and annunciator points.

2=CBE Control-By-Event - Redefining the Control-By-Event associated with each detector, module, or zone.

3=LBL Label - Renaming the custom user label for any detector, module, or zone.

4=OPTNS Options - Selecting the optional features associated with any detector or module.

5=AMAP Annunciator Point Mapping - Selecting Annunciator Point Mapping for any detector, module, or zone.

6=CCBE Cooperative Control-By-Event - Editing the CCBE associated with reverse activated zones for Noti•Fire•Net.

Only option 1 will be used for this step, but options 2 and 5 will be used later. After entering Partial System Programming, select option 1, Intelligent Serial Interface Board, by pressing the following keys at the prompt:

■ 1=TYPID

Option 1 of the Partial Point Programming Menu allows the programmer to change the Software Type ID of any detector, module, zone or EIA-485 protocol point. This presetting of all devices in the system gives the control panel the ability to execute specific functions for each device type. The following display illustrates the assignment of the Software Type ID ACON to the 14th protocol point of the SCS at address 8.

```
PRESS 1=TYPID,2=CBE,3=LBL,4=OPTNS,5=AMAP,6=CCBE                    : 1
ENTER LXX(D/M)YY, ZXXX OR AXXPYY FOR PT. CHANGE (BCKSPC TO ABORT)  : A8P14
ENTER TYPE ID                                                      : ACON
```

Partial Point Programming will jump the programmer out of the programming mode each time a software type ID is entered. Reentering the programming mode for each point to be programmed can prove to be very time consuming. Partial Point Programming should be reserved for instances when only a few points need to be entered or changed.

Another way of programming protocol points with software type IDs is by entering Full Point Programming. Full Point Programming will allow the programmer to enter one point after another. This option should be used when entering all points for the first time. Full Point Programming is referenced in Section 2.4.4.

Control and Monitor Module Programming

The control and monitor modules necessary to control and monitor the fans and dampers of the smoke control system require programming in the FACP. These devices require software type IDs, for identification of the type and configuration of the device; Control-By-Event (CBE) equations, for operation of the automatic mode; and EIA-485 protocol point mapping, for communication between the appropriate control and monitor modules and the EIA-485 protocol points.

Software Type Identification

After installation of the modules required for smoke control, software type IDs must be programmed for all control and monitor modules. The appropriate software type IDs for control and monitor modules are listed in Table 3.14:

Module Type	Software Type ID	Type of Device
CM	CMXC	CM Control Module configured as a Form-C relay. This device is deactivated when system reset occurs.
	CMXS	CM Control Module configured as a Notification Appliance Circuit.
	FRCM	CM Control Module configured as a Form-C relay. This device is not deactivated when system reset occurs.
MM	NOA	MM Monitor Module used to monitor contact closure or shorting-type non-alarm devices.

Table 3.14 Module Software Type IDs

NOTE:

1. When using the software type ID NOA for smoke control applications, the tracking option for the respective monitor module must be enabled (see Section 3.9.1, the paragraph entitled “Optional Feature Programming for Control and Monitor Modules” for information on how to enable tracking).
2. When using software type ID FRCM for a control module, the software type ID for the appropriate $CON_{ON/OP}$ or $CON_{OFF/CL}$ protocol point must be AFCM.

Programming of the software type IDs for control and monitor modules can be accomplished using Partial Point Programming, as shown in Section 2.4.2, or Full Point Programming, as shown in Section 2.4.4. The following display illustrates the assignment of the software type ID FRCM to control module 24 control module on SLC loop 5 using partial point programming:

```
PRESS 1=TYPID,2=CBE,3=LBL,4=OPTNS,5=AMAP,6=CCBE                    : 1
ENTER LXX(D/M)YY, ZXXX OR AXXPYY FOR PT. CHANGE (BCKSPC TO ABORT)  : L5M24
ENTER TYPE ID                                                      : FRCM
```

Full Point Programming can also be used to program software type IDs and is recommended when programming modules for the first time.

For more information on software type IDs, refer to Chapter 3, Section 1.3.1 *Type ID*, and Section 3 *Software Type IDs*, of *The AM2020/AFP1010 Manual*.

Control-By-Event

Each control module must be programmed with Control-By-Event (CBE) equations. Each monitor module can be programmed with CBE lists, but is not required for smoke control. CBE is used to provide a variety of responses based on various combinations of events or initiating conditions. For FSCS Applications with AM2020/AFP1010 Revision 4.0 software or later, Zone 240 is used to activate FSCS mode priority. Once this zone is activated, subsequent automatic events will be locked out. Smoke control operation can only be overridden manually. Each smoke detector input that will lock out the system must be mapped to Z240. Inputs that are not to activate lockout, such as pull stations, should not be mapped to Zone 240. The CBE equations differ based on the application that the SCS/SCE is used for, building type, and building occupancy. For detailed examples of CBE equations and lists specific to smoke control applications, refer to Section 3.10 “Building-Specific Operation and Programming Examples”. After the first fire alarm or initiating condition, subsequent fire alarms will not initiate any further CBE functions for smoke control elements within the system. Additional control after the first fire alarm requires manual intervention at the SCS/SCE.

Programming of CBE for all control modules can be accomplished through Partial Point Programming. After entering the programming mode, select option 3, partial point programming, of the Main Programming Menu by pressing the following keys at the prompt:

D 3 ENTER

■ 3=PPRG

Option 3 from the Programming Menu allows the programmer to change the operational parameters of SLC Loop devices, software-defined zones, and EIA-485 protocol points.

After selecting option 3 from the Main Programming menu, the display will show the Partial Point Programming submenu:

```
PRESS 1=TYPID,2=CBE,3=LBL,4=OPTNS,5=AMAP,6=CCBE                    :
```

After entering Partial System Programming, select option 2, Control-By-Event, by pressing the following keys at the prompt:

C 2 ENTER

■ 2=CBE

Option 2 of the Partial Point Programming Menu allows the programmer to change the Control-By-Event (CBE) for any detector, module or software zone. The panel maintains a CBE for each device and zone installed in the system.

NOTE: A software zone is not a physical zone, but rather a software grouping in control panel memory.

When programming a particular device, the control panel prompts the programmer with:

```
ENTER CONTROL-BY-EVENT                                             :
```

The following display illustrates CBE programming for control module number 23 on SLC Loop 2 to activate software zones 15 and 29.

```
PRESS 1=TYPID,2=CBE,3=LBL,4=OPTNS,5=AMAP,6=CCBE                    : 2
ENTER LXX(D/M)YY, ZXXX OR AXXPYY FOR PT. CHANGE (BCKSPC TO ABORT)  : L2M23
ENTER CONTROL-BY-EVENT                                             :
(Z15 Z29)
```

For a complete description of the types, parameters, limitations, and guidelines of CBE programming, see Appendix A, Control-By-Event.

EIA-485 Protocol Point Mapping

Each control and monitor module associated with the FACP (being used for the purpose of smoke control or HVAC) must be properly and separately mapped to the specific protocol points of each toggle switch group within the SCS⁄SCE. This information must be programmed so that data going between the SCS⁄SCE and control/monitor modules can be properly routed through the FACP.

Programming of point mapping for all modules can be accomplished through Partial Point Programming. After entering the programming mode, select option 3, partial point programming, of the Main Programming Menu by pressing the following keys at the prompt:

■ 3=PPRG

Option 3 from the Programming Menu allows the programmer to change the operational parameters of SLC Loop devices, software-defined zones, and EIA-485 protocol points.

After selecting option 3 from the Main Programming menu, the display will show the Partial Point Programming submenu:

```
PRESS 1=TYPID,2=CBE,3=LBL,4=OPTNS,5=AMAP,6=CCBE                          :
```

After entering Partial System Programming, select option 5, Annunciator Point Mapping, by pressing the following keys at the prompt:

■ 5=AMAP

Option 5 of the Partial Point Programming Menu allows the programmer to individually map devices or zones to EIA-485 protocol points for proper communication.

The following display illustrates mapping monitor module 11 on SLC Loop 1 to an SCS Module at address 1, Point 3.

```
PRESS 1=TYPID,2=CBE,3=LBL,4=OPTNS,5=AMAP,6=CCBE                          : 5
ENTER LXX(D/M)YY, ZXXX OR AXXPYY FOR PT. CHANGE (BCKSPC TO ABORT)       : L1M11
DO YOU WANT TO CHANGE THE ANNUNCIATOR MAPPING FOR THIS POINT? (Y=YES,N=NO)   : Y
DO YOU WANT THIS POINT MAPPED TO AN ANNUNCIATOR? (Y=YES,N=NO)            : Y
ENTER AXXPYY FOR ANNUNCIATOR POINT MAPPING                              : A1P3
```

Each protocol point must be installed through Full Point Programming, as shown in Section 2.4.2, before a control or monitor module may be mapped to it. Every control and monitor module utilized for smoke control must be mapped to its associated protocol point within its respective switch group, as shown below.

Example:
Switch group 1 for an SCS at address 1 would have protocol points 1-4 associated with it. If the switch group was defined as switch group type 5, a control module would be mapped to point 1 and a monitor module would be mapped to point 3 with points 2 and 4 unneeded.

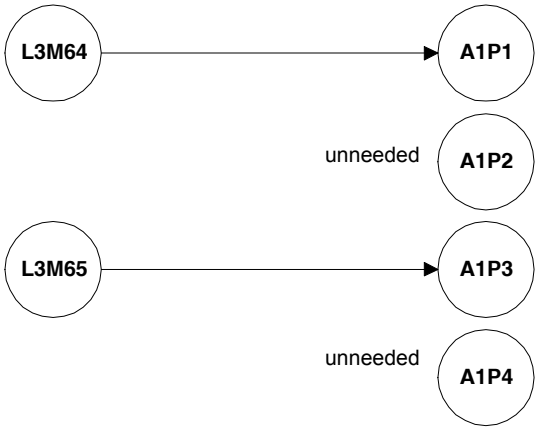

Optional Feature Programming for Control and Monitor Modules

In order for control and monitor modules to function properly in smoke control applications, certain optional features must be set. When programming Control Modules for smoke control applications, the Walk Test option must be disabled and the Signal Silence option must be enabled. This is accomplished by answering "NO" to the question "IS THE WALK TEST OPTION TO BE ENABLED FOR THIS DEVICE?" and answering "YES" to the question "IS THE SIGNAL SILENCE OPTION TO BE ENABLED FOR THIS DEVICE?" within partial point programming, as shown below, or full point programming, as shown in Section 2.4.4. When programming Monitor Modules for smoke control applications, the Tracking option must be enabled. This is accomplished by answering "YES" to the question "DO YOU WANT TO CHANGE THE TRACKING OPTION FOR THIS DEVICE?" within partial point programming, as shown below, or full point programming, as shown in Section 2.4.4.

Programming of the optional features for all modules can be accomplished through Partial Point Programming. After entering the programming mode, select option 3, partial point programming, of the Main Programming Menu by pressing the following keys at the prompt:

■ 3=PPRG

Option 3 from the Programming Menu allows the programmer to change the operational parameters of SLC Loop devices, software-defined zones, and EIA-485 protocol points.

After entering Partial System Programming, select option 4, Optional Features, by pressing the following keys at the prompt:

■ 4=OPTNS

Option 4 of the Partial Point Programming Menu allows the programmer to individually enable or disable, per device, the functions of Signal Silence and Walk Test (for control modules), Alarm Verification and Sensitivity (for addressable detectors), and Tracking (addressable detectors and monitor modules). These functions must still be enabled or disabled, as appropriate, for the entire system (see Partial System Programming). For an explanation of the functions of Signal Silence, Alarm Verification, Sensitivity, and Tracking, see the Glossary of Terms and Abbreviations at the end of this manual.

A control module example:

```
PRESS 1=TYPID,2=CBE,3=LBL,4=OPTNS,5=AMAP,6=CCBE                          : 4
ENTER LXX(D/M)YY, ZXXX OR AXXPYY FOR PT. CHANGE (BCKSPC TO ABORT)      : L3M21
DO YOU WANT TO CHANGE THE SIGNAL SILENCE OPTION FOR THIS DEVICE? (Y=YES,N=NO): Y
IS THE SIGNAL SILENCE OPTION TO BE ENABLED FOR THIS DEVICE? (Y=YES,N=NO)    : Y
DO YOU WANT TO CHANGE THE WALK TEST OPTN FOR THIS DEVICE? (Y=YES,N=NO)      : Y
IS THE WALK TEST OPTION TO BE ENABLED FOR THIS DEVICE? (Y=YES,N=NO)         : N
```

A monitor module example:

```
PRESS 1=TYPID,2=CBE,3=LBL,4=OPTNS,5=AMAP,6=CCBE                          : 4
ENTER LXX(D/M)YY, ZXXX OR AXXPYY FOR PT. CHANGE (BCKSPC TO ABORT)      : L5M13
DO YOU WANT TO CHANGE THE TRACKING OPTN FOR THIS DEVICE? (Y=YES,N=NO)       : Y
IS THE TRACKING OPTION TO BE ENABLED FOR THIS DEVICE? (Y=YES,N=NO)          : Y
```

Full Point Programming

After entering the programming mode, select option 4, full point programming, of the Main Programming Menu by pressing the following keys at the prompt:

■ 4=FPRG

Option 4 from the Programming Menu allows the programmer to completely program all of the addressable detectors, modules, software-defined zones and EIA-485 protocol points in the AM2020/AFP1010 system. The programming examples illustrate the CRT screen prompts displayed during Full Point Programming.

After entering Full Point Programming, the display will show the following:

```
ENTER LXX(D/M)YY, ZXXX OR AXXPYY FOR PT. INSTALL (BCKSPC TO ABORT)      :
```

NOTE: The control panel continuously loops back through the Full Point Programming routine, allowing the programmer to enter devices, software zones or annunciator points one after the other. Use the Backspace key to exit Full Point Programming.

Example: Programming EIA-485 Protocol Points

Installation of individual annunciator points.

```
ENTER LXX(D/M)YY, ZXXX OR AXXPYY FOR PT. INSTALL (BCKSPC TO ABORT)     : A12P10
ENTER TYPE ID                                                            : AMON
```

Example: Programming Addressable Detectors

Photoelectric Smoke Detector on SLC LOOP 2 programmed to activate three software zones -Z13, Z29, and Z240 (Z240 is for FSCS Mode operation, Version 4.0 AM2020/AFP1010 or greater) - and also mapped to annunciator module address “02” point “02”.

```
PRESS 1=PSYS,2=FSYS,3=PPRG,4=FPRG,5=REMV,6=PSWD,7=MSG,8=HIS                : 4
ENTER LXX(D/M)YY, ZXXX OR AXXPYY FOR PT. INSTALL (BCKSPC TO ABORT    : L2D23
ENTER TYPE ID                                                          : PHOT
ENTER CONTROL-BY-EVENT                                                 :
(Z13 Z29 Z240)
ENTER 20 CHARACTER CUSTOM LABEL                          : MAIN LOBBY DETECTOR
IS THE DETECTOR VERIFICATION OPTN TO BE ENABLED FOR THIS DEVICE? (Y=YES,N=NO): Y
ENTER THE DETECTOR SENSITIVITY SELECTION FOR THIS DEVICE (L=LOW,M=MED,H=HIGH): H
IS THE TRACKING OPTION TO BE ENABLED FOR THIS DEVICE? (Y=YES,N=NO)          : Y
IS THERE DAY/NIGHT SENSITIVITY CONTROL FOR THIS DEVICE? (Y=YES,N=NO)        : Y
DO YOU WANT THIS POINT MAPPED TO AN ANNUNCIATOR? (Y=YES,N=NO)               : Y
ENTER AXXPYY FOR ANNUNCIATOR POINT MAPPING                             : A2P2
```

Example: Programming Control Modules

Control Module on SLC Loop 2 programmed to turn on in response to an alarm condition on either of two software zones (Z13 or Z29), and also mapped to annunciator module address "02" point "04".

```
ENTER LXX(D/M)YY, ZXXX OR AXXPYY FOR PT. INSTALL (BCKSPC TO ABORT)      : L2M19
ENTER TYPE ID                                                             : CMXS
ENTER CONTROL-BY-EVENT                                                         :
OR(Z13 Z29)
ENTER 20 CHARACTER CUSTOM LABEL                          : MAIN LOBBY BELLS
IS THE SIGNAL SILENCE OPTION TO BE ENABLED FOR THIS DEVICE? (Y=YES,N=NO)     : Y
IS THE WALK TEST OPTION TO BE ENABLED FOR THIS DEVICE? (Y=YES,N=NO)          : N
DO YOU WANT THIS POINT MAPPED TO AN ANNUNCIATOR? (Y=YES,N=NO)                : Y
ENTER AXXPYY FOR ANNUNCIATOR POINT MAPPING                               : A2P5
```

NOTE: Control modules that activate monitor modules via physical connections must not have the walk test option enabled.

3.10 Building-Specific Operation and Programming Examples

The eight story building shown in Figure 3.35, originally shown in Figure 2.4, will be used to detail the procedure for smoke control using the SCS/SCE. The building is eight stories, where each floor is designated as a smoke control zone. There is also a stairtower and elevator shaft to consider. The system depicted here will utilize pressurization where all nonsmoke zones will be pressurized. The stairtower will use a multiple injection system and the elevator hoistway will only be pressurized to prevent the migration of smoke (it will not be used for evacuation). We will also assume that the FACP and associated devices for fire protection are already installed. There are six smoke detectors and one pull station on each floor. There is also one waterflow switch per floor on the sprinkler system to detect the flow of water on each floor.

Before proceeding, the designer must decide whether the system is to be a dedicated or non-dedicated system. This example will be demonstrated both ways. The first design will use a dedicated system. For the dedicated system all fans are normally off, all supply dampers and all exhaust dampers are normally closed (when no power is applied to the damper, it is closed). Since the system is not used for any reason other than smoke control, the fans are off, the supply dampers are closed and the exhaust dampers are closed before a fire is detected.

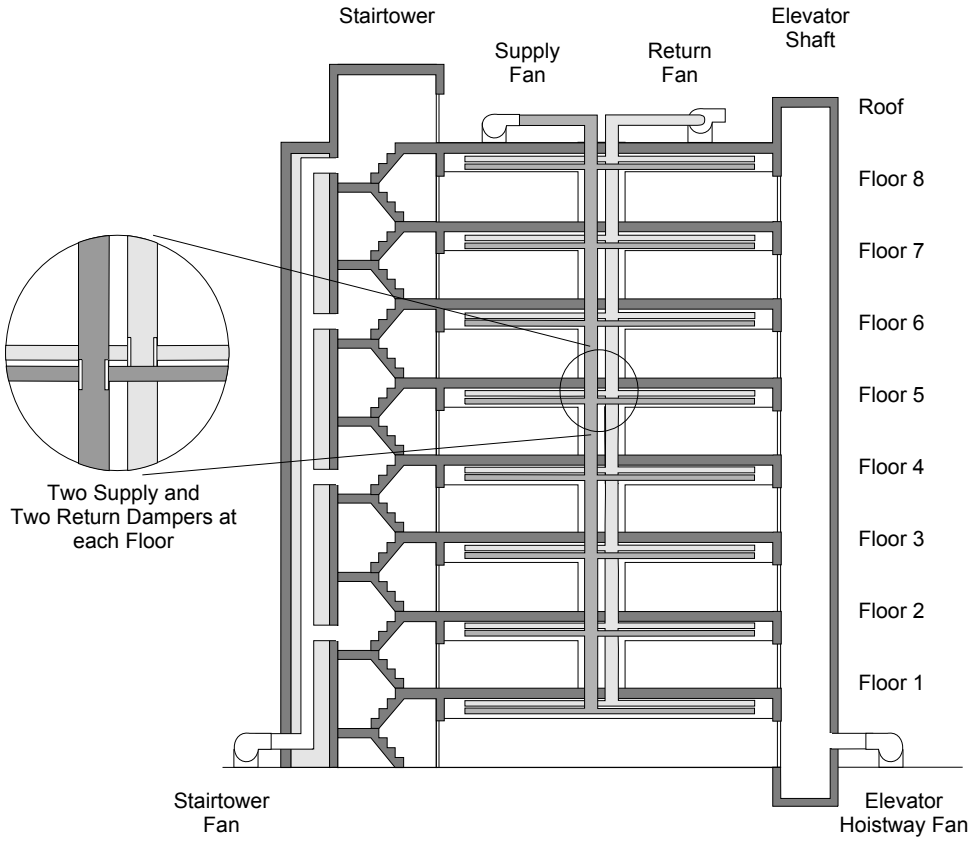

Figure 3.35 Eight Story Building

3.10.1 Dedicated System Design

Preliminary Design Considerations

Once the type of system has been determined, the designer must determine the number of fans and dampers that are to be controlled/monitored. In this example we have four fans; one for the stairtower, one for the elevator hoistway, one for the supply of air to pressurize all nonsmoke zones, and one for the exhaust of smoke from the smoke zone. There are also 32 dampers; two dampers on the supply duct per floor, and two dampers on the exhaust duct per floor.

The next step is to determine the capabilities of each fan/damper and the corresponding switch group type. All four fans need to have the capability to turn on in response to a fire. Since the fans are normally off, the fans do not need to have the capability of being turned off in response to a fire. We do want to ensure that the fans turn on when a fire is detected, so the fans also require the capability of being monitored for the on state.

The dampers in this example can be broken into two groups - supply dampers and exhaust dampers. The dampers on the supply duct need to be open on all nonsmoke zones and closed for the smoke zone. Since the supply dampers are normally closed, they only need the capability to be opened. The dampers on the exhaust duct need to be open for the fire floor and closed for all nonsmoke zones. Since the exhaust dampers are normally closed, they only need to have the capability to be opened. It is extremely important to make sure that the dampers which need to be open are open and that the dampers which need to be closed are closed, so for this example all dampers will require verification of when they are open and when they are closed. The results of the capabilities required for each device are as follows:

Stairtower Fan (1):	capability to turn on and verify on state
Elevator Fan (1):	capability to turn on and verify on state
Supply Fan (1):	capability to turn on and verify on state
Exhaust Fan (1):	capability to turn on and verify on state
Supply Dampers (16):	capability to open damper and verify open and closed state
Exhaust Dampers (16):	capability to open damper and verify open and closed state

By referencing Table 3.3 the corresponding switch group type can be obtained.

Stairtower Fan (1):	Switch Group Type 5 ($CON_{ON/OP}$ and $VER_{ON/OP}$)
Elevator Fan (1):	Switch Group Type 5 ($CON_{ON/OP}$ and $VER_{ON/OP}$)
Supply Fan (1):	Switch Group Type 5 ($CON_{ON/OP}$ and $VER_{ON/OP}$)
Exhaust Fan (1):	Switch Group Type 5 ($CON_{ON/OP}$ and $VER_{ON/OP}$)
Supply Dampers (16):	Switch Group Type 6 ($CON_{ON/OP}$, $VER_{ON/OP}$ and $VER_{OFF/CL}$)
Exhaust Dampers (16):	Switch Group Type 6 ($CON_{ON/OP}$, $VER_{ON/OP}$ and $VER_{OFF/CL}$)

For each capability a device is to have, a control or monitor module will be necessary at the fan or damper. Each control (CON) capability will require a control module (CM) and each verification (VER) capability will require a monitor module (MM).

Stairtower Fan (1):	$CON_{ON/OP}$ and $VER_{ON/OP}$	1 - CM 1 - MM
Elevator Fan (1):	$CON_{ON/OP}$ and $VER_{ON/OP}$	1 - CM 1 - MM
Supply Fan (1):	$CON_{ON/OP}$ and $VER_{ON/OP}$	1 - CM 1 - MM
Exhaust Fan (1):	$CON_{ON/OP}$ and $VER_{ON/OP}$	1 - CM 1 - MM
Supply Dampers (16):	$CON_{ON/OP}$, $VER_{ON/OP}$ and $VER_{OFF/CL}$	16 - CM 32 - MM
Exhaust Dampers (16):	$CON_{ON/OP}$, $VER_{ON/OP}$ and $VER_{OFF/CL}$	16 - CM 32 - MM

For our example a total of 36 CMs and 68 MMs will be required.

The next step is to determine the configurations for the SCSs and/or SCEs to be used. Although there are many ways to configure the SCS⁄SCE pairs, the following configuration will be used for this example:

- The four type 5 fans will be on one SCS with four switch groups unused.
- The 32 type 6 dampers will be on two SCS⁄SCE pairs.

The configurations selected on the previous page are reference numbers 11 and 12 respectively from Table 3.5 (12 will be used twice). The dipswitch settings from Table 3.5 for each SCS should be noted for installation purposes at this time.

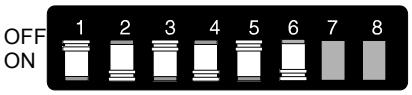

Dipswitches 1-5 from reference number 11 of Table 3.5 set all the switch groups for switch group type 5. Dipswitch 6 is in the ON position to select the FSCS mode. Dipswitch 7 is in the ON position to select Dedicated System operation. Dipswitch 8 is OFF so that the end-of-line termination resistor is not installed. Dipswitch 8 is only set to the ON position when the particular SCS is the last device on the EIA-485 data line.

Dipswitches 1-5 from reference number 12 of Table 3.5 set all the switch groups for switch group type 6. Dipswitch 6 is in the ON position to select the FSCS mode. Dipswitch 7 is in the ON position to select Dedicated System operation. Dipswitch 8 is OFF for the first SCS⁄SCE pair so that the end-of-line termination resistor is not installed. Dipswitch 8 is ON for the second SCS⁄SCE pair so that the end-of-line termination resistor is installed. Dipswitch 8 is only set to the ON position when the particular SCS is the last device on the EIA-485 data line.

After the dipswitch settings have been determined, an EIA-485 device address for each SCS must be determined. As stated before, there are 32 available addresses. So if no other EIA-485 devices are present on the data line (such as annunciators) the maximum number of SCS⁄SCE pairs allowed is 32. For our example, we only need three available addresses. Let us assume that addresses 5, 6, and 7 are available. As shown in Table 3.4 and Figure 3.4, set the dipswitches and addresses of each SCS.

The next step is to categorize all protocol points as needed, unneeded, or unused, as discussed in Section 2.4.2. Using the bottom portion of worksheet 2 as a guide, our example for the SCS at address 5 would look like the following:

Point Assignments:		classification	type ID	Point Assignments:		classification	type ID
1	($CON_{ON/OP}$)	needed	_____	17	($CON_{ON/OP}$)	unused	_____
2	($CON_{OFF/CL}$)	unneeded	_____	18	($CON_{OFF/CL}$)	unused	_____
3	($VER_{ON/OP}$)	needed	_____	19	($VER_{ON/OP}$)	unused	_____
4	($VER_{OFF/CL}$)	unneeded	_____	20	($VER_{OFF/CL}$)	unused	_____
5	($CON_{ON/OP}$)	needed	_____	21	($CON_{ON/OP}$)	unused	_____
6	($CON_{OFF/CL}$)	unneeded	_____	22	($CON_{OFF/CL}$)	unused	_____
7	($VER_{ON/OP}$)	needed	_____	23	($VER_{ON/OP}$)	unused	_____
8	($VER_{OFF/CL}$)	unneeded	_____	24	($VER_{OFF/CL}$)	unused	_____
9	($CON_{ON/OP}$)	needed	_____	25	($CON_{ON/OP}$)	unused	_____
10	($CON_{OFF/CL}$)	unneeded	_____	26	($CON_{OFF/CL}$)	unused	_____
11	($VER_{ON/OP}$)	needed	_____	27	($VER_{ON/OP}$)	unused	_____
12	($VER_{OFF/CL}$)	unneeded	_____	28	($VER_{OFF/CL}$)	unused	_____
13	($CON_{ON/OP}$)	needed	_____	29	($CON_{ON/OP}$)	unused	_____
14	($CON_{OFF/CL}$)	unneeded	_____	30	($CON_{OFF/CL}$)	unused	_____
15	($VER_{ON/OP}$)	needed	_____	31	($VER_{ON/OP}$)	unused	_____
16	($VER_{OFF/CL}$)	unneeded	_____	32	($VER_{OFF/CL}$)	unused	_____

For AM2020/AFP1010 only: After categorizing all protocol points, the software type IDs can be selected as discussed in Section 2.4.2. All protocol points that are needed get assigned software type IDs from Table 3.13. All protocol points that are unneeded do not get a software type ID and do not get programmed into FACP memory. All unused protocol points get assigned the software type ID ACON. This information should be filled out on worksheet 2.

Installation

At this point, all the preliminary design work is complete. The next step is to install all control modules and monitor modules on the required devices, as shown in Section 5 “Ratings and Wiring Diagrams”, and install the SCS⁄SCE pairs as described in Section 3.5 “Cabinet and Chassis Mounting”. Once the installation of all fans, dampers, control modules, monitor modules, SCSs, and SCEs is complete, the FACP requires additional programming for smoke control.

Programming (AM2020/AFP1010 Example)

Programming SCS annunciator addresses, linking annunciator points with control or monitor modules, assigning control and monitor Type IDs, and creating control-by-event equations to obtain desired fan and damper activity, are the steps required to complete the smoke control setup. Refer to Programming in Section 2.4 for descriptions of the various programming processes. Following is a step-by-step description of AM2020/AFP1010 programming for this example.

The first step to programming the FACP for smoke control is to define each SCS address in FACP memory. Refer to Section 2.4.1, EIA-485 Device Addressing, for instructions on how this is accomplished. SCS addresses 5, 6, and 7 would need to be entered for this example.

The next step is to program all EIA-485 protocol points, including software type IDs. By referencing the worksheets, all the information necessary is close at hand.

Point assignments for SCS at address 5:

Point Assignments:		classification	type ID	Point Assignments:		classification	type ID
1	($CON_{ON/OP}$)	needed	ACON	17	($CON_{ON/OP}$)	unused	ACON
2	($CON_{OFF/CL}$)	unneeded	-	18	($CON_{OFF/CL}$)	unused	ACON
3	($VER_{ON/OP}$)	needed	AMON	19	($VER_{ON/OP}$)	unused	ACON
4	($VER_{OFF/CL}$)	unneeded	-	20	($VER_{OFF/CL}$)	unused	ACON
5	($CON_{ON/OP}$)	needed	ACON	21	($CON_{ON/OP}$)	unused	ACON
6	($CON_{OFF/CL}$)	unneeded	-	22	($CON_{OFF/CL}$)	unused	ACON
7	($VER_{ON/OP}$)	needed	AMON	23	($VER_{ON/OP}$)	unused	ACON
8	($VER_{OFF/CL}$)	unneeded	-	24	($VER_{OFF/CL}$)	unused	ACON
9	($CON_{ON/OP}$)	needed	ACON	25	($CON_{ON/OP}$)	unused	ACON
10	($CON_{OFF/CL}$)	unneeded	-	26	($CON_{OFF/CL}$)	unused	ACON
11	($VER_{ON/OP}$)	needed	AMON	27	($VER_{ON/OP}$)	unused	ACON
12	($VER_{OFF/CL}$)	unneeded	-	28	($VER_{OFF/CL}$)	unused	ACON
13	($CON_{ON/OP}$)	needed	ACON	29	($CON_{ON/OP}$)	unused	ACON
14	($CON_{OFF/CL}$)	unneeded	-	30	($CON_{OFF/CL}$)	unused	ACON
15	($VER_{ON/OP}$)	needed	AMON	31	($VER_{ON/OP}$)	unused	ACON
16	($VER_{OFF/CL}$)	unneeded	-	32	($VER_{OFF/CL}$)	unused	ACON

Since an SCE is not used at address 5, switches 9-16 are not used. Subsequently protocol points 33-64 are unused and are assigned the software type ID ACON.

Point assignments for the SCS⁄SCE pair at address 6 and for the pair at address 7:

Point Assignments:		classification	type ID	Point Assignments:		classification	type ID
1	($CON_{ON/OP}$)	needed	ACON	17	($CON_{ON/OP}$)	needed	ACON
2	($CON_{OFF/CL}$)	unneeded	-	18	($CON_{OFF/CL}$)	unneeded	-
3	($VER_{ON/OP}$)	needed	AMON	19	($VER_{ON/OP}$)	needed	AMON
4	($VER_{OFF/CL}$)	needed	AMON	20	($VER_{OFF/CL}$)	needed	AMON
5	($CON_{ON/OP}$)	needed	ACON	21	($CON_{ON/OP}$)	needed	ACON
6	($CON_{OFF/CL}$)	unneeded	-	22	($CON_{OFF/CL}$)	unneeded	-
7	($VER_{ON/OP}$)	needed	AMON	23	($VER_{ON/OP}$)	needed	AMON
8	($VER_{OFF/CL}$)	needed	AMON	24	($VER_{OFF/CL}$)	needed	AMON
9	($CON_{ON/OP}$)	needed	ACON	25	($CON_{ON/OP}$)	needed	ACON
10	($CON_{OFF/CL}$)	unneeded	-	26	($CON_{OFF/CL}$)	unneeded	-
11	($VER_{ON/OP}$)	needed	AMON	27	($VER_{ON/OP}$)	needed	AMON
12	($VER_{OFF/CL}$)	needed	AMON	28	($VER_{OFF/CL}$)	needed	AMON
13	($CON_{ON/OP}$)	needed	ACON	29	($CON_{ON/OP}$)	needed	ACON
14	($CON_{OFF/CL}$)	unneeded	-	30	($CON_{OFF/CL}$)	unneeded	-
15	($VER_{ON/OP}$)	needed	AMON	31	($VER_{ON/OP}$)	needed	AMON
16	($VER_{OFF/CL}$)	needed	AMON	32	($VER_{OFF/CL}$)	needed	AMON

Point Assignments:		classification	type ID	Point Assignments:		classification	type ID
33	($CON_{ON/OP}$)	needed	ACON	49	($CON_{ON/OP}$)	needed	ACON
34	($CON_{OFF/CL}$)	unneeded	-	50	($CON_{OFF/CL}$)	unneeded	-
35	($VER_{ON/OP}$)	needed	AMON	51	($VER_{ON/OP}$)	needed	AMON
36	($VER_{OFF/CL}$)	needed	AMON	52	($VER_{OFF/CL}$)	needed	AMON
37	($CON_{ON/OP}$)	needed	ACON	53	($CON_{ON/OP}$)	needed	ACON
38	($CON_{OFF/CL}$)	unneeded	-	54	($CON_{OFF/CL}$)	unneeded	-
39	($VER_{ON/OP}$)	needed	AMON	55	($VER_{ON/OP}$)	needed	AMON
40	($VER_{OFF/CL}$)	needed	AMON	56	($VER_{OFF/CL}$)	needed	AMON
41	($CON_{ON/OP}$)	needed	ACON	57	($CON_{ON/OP}$)	needed	ACON
42	($CON_{OFF/CL}$)	unneeded	-	58	($CON_{OFF/CL}$)	unneeded	-
43	($VER_{ON/OP}$)	needed	AMON	59	($VER_{ON/OP}$)	needed	AMON
44	($VER_{OFF/CL}$)	needed	AMON	60	($VER_{OFF/CL}$)	needed	AMON
45	($CON_{ON/OP}$)	needed	ACON	61	($CON_{ON/OP}$)	needed	ACON
46	($CON_{OFF/CL}$)	unneeded	-	62	($CON_{OFF/CL}$)	unneeded	-
47	($VER_{ON/OP}$)	needed	AMON	63	($VER_{ON/OP}$)	needed	AMON
48	($VER_{OFF/CL}$)	needed	AMON	64	($VER_{OFF/CL}$)	needed	AMON

All of the protocol points with software type IDs must be entered in FACP memory. Refer to Table 3.13 for protocol point software type IDs and Section 2.4.4, Full Point Programming, for instructions on programming EIA-485 protocol points.

After programming of all protocol points is complete, the programming associated with the control and monitor modules must take place, including software type IDs, Control-By-Event, and protocol point mapping. This will be accomplished by using full point programming. Before beginning full point programming, determine all parameters associated with each control module and monitor module. Worksheet 3 will assist in the organization of information required for programming control and monitor modules.

The software type IDs for control and monitor modules are listed in Table 3.14. For this example, all control modules require the software type ID CMXS and all monitor modules require the software type ID NOA.

Once the software type IDs have been determined, Control-By-Event (CBE) programming must be tackled. Before programming the FACP with CBE, some thought must be given to a smoke control scheme.

- How will the smoke control system be activated?
- What devices will be activated first, second, etc.?
- What detectors will activate what parts of the smoke control system?

NOTE:
1. Duct detectors must not be used to activate the smoke control system.
2. Manual pull stations must not be used to activate zoned smoke control, but can be used to activate stairtower pressurization or elevator hoistway protection.

For this example, we have six smoke detectors, a waterflow switch, and one manual pull station per floor, where each floor is designated as a smoke control zone. Upon activation of a smoke detector or a waterflow switch, the system should pressurize the stairtower and elevator hoistway, open the supply dampers on all non-fire floors, open the exhaust dampers on the fire floor, and turn on the supply and exhaust fans. Supply and exhaust fans should not be turned on until all dampers required to be open have been opened and all dampers required to be closed have been closed. After the first fire alarm, subsequent fire alarms will not initiate any further Control-By-Event functions for smoke control elements within the system. Additional control after the first fire alarm requires manual intervention at the SCS⁄SCE.

Upon activation of a pull station, the system should only pressurize the stairtower and elevator hoistway. The zoned smoke control must not be activated from manual pull stations because there is no guarantee that the pull station activated is on the fire floor.

NOTE: For FSCS Applications with AM2020/AFP1010 Revision 4.0 software or later, Zone 240 is used to activate FSCS mode priority. Once this zone is activated, subsequent automatic events will be locked out. Smoke control operation can only be overridden manually. Each smoke detector input that will lock out the system must be mapped to Z240. Inputs that are not to activate lockout, such as pull stations, should not be mapped to Zone 240.

Now that a general scheme has been worked out, we can begin determining CBE programming for the FACP.

The Control-By-Event equations for control modules and the Control-By-Event lists for monitor modules (if used) require quite a bit of thought before being programmed. Control-By-Event equations provide the necessary control capabilities during automatic operation of the smoke control station. For instance, if a fan is to be turned on in response to a fire on a particular floor, the CBE equation for the control module which controls that fan must reference all of the detectors on that floor. When one of the detectors is active as a result of a fire, the CBE equation becomes TRUE, activating the control module and turning on the fan. If the designer is unfamiliar with CBE programming, Appendix A, Control-By-Event, should be read before proceeding.

NOTE: Some of the CBE equations in this example exceed the 14 byte limitation called out in Appendix A. They were intentionally left intact to show the complete equation and to reduce complexity. Equations larger than 14 bytes must be broken into smaller groups of equations as shown in Appendix A.

The first CBE equation to be determined is for the staircase fan. The staircase fan has one control module for controlling the ON capability of the fan (the control module is referred to as a $CON_{ON/OP}CM$). Let us assume that this $CON_{ON/OP}CM$ is the first module wired on SLC loop 9, L9M1 (the monitor module for the staircase fan would be L9M2). For our example, if any detector, pull station, or waterflow switch is ACTIVE, the staircase fan must be turned on. So, the CBE equation for the $CON_{ON/OP}CM$ must be TRUE when any device is active. The pull station and the waterflow switch would be monitored by an monitor module. The monitor module for the pull station is L1M1 and the monitor module for the waterflow switch is L1M2. The six detectors on the first floor; L1D1, L1D2, L1D3, L1D4, L1D5, and L1D6; and the two monitor modules; L1M1 and L1M2; are wired on SLC loop one of the FACP. Each floor has the same configuration of detectors and modules except the second floor is on loop 2, the third floor is on loop 3, etc. So, the fifth detector on floor 8 would be L8D5. If nine reverse software zones are defined (Z201, Z202, Z203, Z204, Z205, Z206, Z207, Z208, and Z209), one for each floor (Z201-Z208) and one for all pull stations, the software zones for each floor would be programmed with CBE equations of:

OR(LxD1 LxD2 LxD3 LxD4 LxD5 LxD6 LxM2)

where x is one of the eight loops (1-8) that corresponds to the appropriate floor. The software zone for the pull stations (Z209) would be programmed with a CBE equation of:

OR(L1M1 L2M1 L3M1 L4M1 L5M1 L6M1 L7M1 L8M1)

The CBE equation for the staircase fan control module would be:

OR(Z201 Z202 Z203 Z204 Z205 Z206 Z207 Z208 Z209)

The elevator fan operates under the same circumstances as the staircase fan and therefore has the same CBE equation. The elevator fan has one control module for controlling the ON capability of the fan (the control module is referred to as a $CON_{ON/OP}CM$). Let us assume that this $CON_{ON/OP}CM$ is the third module wired on SLC loop 9, L9M3 (the monitor module for the elevator fan would be L9M4). Since the elevator fan operates under the same conditions as the staircase fan, the CBE equation for the $CON_{ON/OP}CM$ of the elevator fan will be the same:

OR(Z201 Z202 Z203 Z204 Z205 Z206 Z207 Z208 Z209)

If any device in the building becomes ACTIVE as a result of a fire, one of the eight CBE equations for the reverse zones would become TRUE, which would cause that reverse zone to become ACTIVE. The activation of that zone would cause the equations for L9M1 and L9M3 to be TRUE, which would cause the control modules to be ACTIVE. When the control modules become active the fans for the staircase and elevator hoistway will turn on.

The next set of equations to be determined is for the supply dampers. There is one control module per damper with the capability to open the dampers (the control module is referred to as a $CON_{ON/OP}CM$). Let us assume that the two $CON_{ON/OP}CM$s for the supply dampers are wired on the SLC loop for the floor that they serve. For instance the two control modules for floor 3 would be L3M3 and L3M6 (the four monitor modules would be L3M4, L3M5, L3M7 and L3M8). All supply dampers on non-fire floors must be opened when a fire is detected. However, the dampers are not to open in response to the manual pull station. If we use the eight reverse software zones that were defined earlier (Z201-Z208), the CBE equation for the control modules controlling the supply dampers on each floor would be:

module #:	CBE equation:
L1M3 and L1M6	OR(Z202 Z203 Z204 Z205 Z206 Z207 Z208)
L2M3 and L2M6	OR(Z201 Z203 Z204 Z205 Z206 Z207 Z208)
L3M3 and L3M6	OR(Z201 Z202 Z204 Z205 Z206 Z207 Z208)
L4M3 and L4M6	OR(Z201 Z202 Z203 Z205 Z206 Z207 Z208)
L5M3 and L5M6	OR(Z201 Z202 Z203 Z204 Z206 Z207 Z208)
L6M3 and L6M6	OR(Z201 Z202 Z203 Z204 Z205 Z207 Z208)
L7M3 and L7M6	OR(Z201 Z202 Z203 Z204 Z205 Z206 Z208)
L8M3 and L8M6	OR(Z201 Z202 Z203 Z204 Z205 Z206 Z207)

If a device on floor 6, with the exception of the manual pull station, becomes ACTIVE, the CBE equation for Z206 will become TRUE. As a result, all equations that contain Z206 in them will be TRUE. When the equations become TRUE, the $CON_{ON/OP}CM$s become ACTIVE and open all the dampers except those on floor 6. The CBE equations for L6M3 and L6M6 are the only equations that will be FALSE in this case and subsequently not open the dampers on floor 6.

The next set of equations to be determined is for the exhaust dampers. There is one control module per damper with the capability to open the dampers (the control module is referred to as a $CON_{ON/OP}CM$). Let us assume that the two $CON_{ON/OP}CM$s for the exhaust dampers are wired on the SLC loop for the floor that they serve. For instance the two control modules for floor 5 would be L5M9 and

L5M12 (the four monitor modules would be L3M10, L3M11, L3M13 and L3M14). The two exhaust dampers per floor are to open when a fire is detected on that floor. However, the dampers are not to open in response to the manual pull station. The CBE equation for the $CON_{ON/OP}$CMs controlling the exhaust dampers on each floor would be:

OR(Z20x)

where x is one of the eight reverse software zones corresponding to the appropriate floor. If a device on floor 6, with the exception of the manual pull station, becomes ACTIVE, the CBE equation for Z206 will become TRUE. This would cause the equations for L6M9 and L6M12 to become TRUE. When these equations become TRUE the $CON_{ON/OP}$CMs are ACTIVE and open the two dampers.

The CBE equations for the supply and exhaust fans are a little more complex than the equations previously discussed. In order to prevent damage to ductwork, the supply and exhaust fans should not be turned on until the dampers that need to opened are open and the dampers that need to be closed are closed. So, not only do the CBE equations have to check when a detector is in alarm, but they have to check the monitor modules on the dampers to ensure the open/closed position. The supply fan has one control module for controlling the ON capability of the supply fan and the exhaust fan has one control module for controlling the ON capability of the exhaust fan (both control modules are referred to as $CON_{ON/OP}$CMs). Let us assume that both $CON_{ON/OP}$CMs are wired on SLC loop 9 of the FACP. These would be the fifth and seventh modules on this loop. The $CON_{ON/OP}$CM for the supply fan would be L9M5 and the control module for the exhaust fan would be L9M7 (the monitor modules would be L9M6 and L9M8 respectively).

There are two monitor modules per damper and there are four dampers per floor (two supply and two exhaust). The supply dampers must be checked to make sure that at least one of the dampers is open. The exhaust dampers must be checked to ensure that the damper on the fire floor is open. Let us assume that the four monitor modules for the dampers are wired on the SLC loop for the floor that they serve. For instance the four monitor modules of the supply dampers for floor 5 would be L5M4, L5M5, L5M7 and L5M8 and the four monitor modules of the exhaust dampers for floor 5 would be L5M10, L5M11, L5M13 and L5M14 (where LxM4 and LxM7 are the $VER_{ON/OP}$MMs for the supply damper, LxM5 and LxM8 are the $VER_{OFF/CL}$MMs for the supply damper, LxM10 and LxM13 are the $VER_{ON/OP}$MMs for the exhaust damper, and LxM11 and LxM14 are the $VER_{OFF/CL}$MMs for the exhaust damper).

The CBE equation for the supply fan involve the creation of eight more reverse software zones (Z211, Z212, Z213, Z214, Z215, Z216, Z217, and Z218), one for each floor, and each programmed with a CBE of:

AND(LxM4 LxM7)

This equation is TRUE when the supply dampers on floor x are open. The CBE equation for L9M5 would be:

AND(Z20x AND(LxM5 LxM8) OR(Z211 Z212 Z213 Z214 Z215 Z216 Z217 Z218))

where x is one of the eight loops (1-8) that corresponds to the appropriate floor. If any device in the building becomes ACTIVE as a result of a fire (except the manual pull stations) AND the supply dampers are closed for that floor AND at least one pair of dampers on the other floors are open, then the equation for L9M5 would become TRUE. This would cause the control module to be ACTIVE. When the control module becomes active the supply fan will turn on.

The CBE equation for the exhaust fan involves the creation of eight more reverse software zones (Z221, Z222, Z223, Z224, Z225, Z226, Z227, and Z228), one for each floor, and programmed with a CBE of:

AND(Z20x LxM5 LxM8 LxM10 LxM13)

where x is one of the eight loops (1-8) that corresponds to the appropriate floor, then the CBE equation for L9M7 would be:

OR(Z221 Z222 Z223 Z224 Z225 Z226 Z227 Z228)

If any device in the building becomes ACTIVE as a result of a fire (except the manual pull stations) AND both the supply damper for that floor is closed and the exhaust damper for that floor is open, one of the eight reverse zone CBE equations would become TRUE, which would cause that reverse zone to become active. The activation of that zone would cause the equation L9M7 to be TRUE, which would cause the control module to be ACTIVE. When the control module becomes active the exhaust fan will turn on.

Once CBE equations have been determined for all devices being used for smoke control, each control and monitor module must be mapped to the appropriate EIA-485 protocol point. This process is very important because a control or monitor module is linked to its associated protocol point within a particular switch group for proper communication. The control module and monitor module information for the fans is listed below:

		loop # / module #	SCS address/ point #
Stairtower fan	$CON_{ON/OP}$CM	L9M1	A5P1
	$VER_{ON/OP}$MM	L9M2	A5P3
Elevator fan	$CON_{ON/OP}$CM	L9M3	A5P5
	$VER_{ON/OP}$MM	L9M4	A5P7
Supply fan	$CON_{ON/OP}$CM	L9M5	A5P9
	$VER_{ON/OP}$MM	L9M6	A5P11
Exhaust fan	$CON_{ON/OP}$CM	L9M7	A5P13
	$VER_{ON/OP}$MM	L9M8	A5P15

Mapping in this fashion causes switch group 1 for the SCS at address 5 to control and monitor the fan for the stairtower. Similarly, Switch group 2 would be for the elevator fan, switch group 3 would be for the supply fan, and switch group 4 would be for the exhaust fan. All of the dampers must be mapped in the same way.

Once all mapping information is determined, there are only three more items to keep in mind before entering full point programming:

1. All monitor modules used for smoke control must have the tracking option enabled. This is set by answering "Y" to the question:
   `IS THE TRACKING OPTION TO BE ENABLED FOR THIS DEVICE? (Y=YES,N=NO) :`
2. All control modules used for smoke control must have the walk test option disabled. This is set by answering "N" to the question:
   `IS THE WALK TEST OPTION TO BE ENABLED FOR THIS DEVICE? (Y=YES,N=NO) :`
3. All control modules used for smoke control must have the signal silence option enabled. This is set by answering "Y" to the question:
   `IS THE SIGNAL SILENCE OPTION TO BE ENABLED FOR THIS DEVICE? (Y=YES,N=NO) :`

With all software type IDs determined, the CBE equations determined, the annunciator point mapping determined, and the features listed above kept in mind, the designer can enter full point programming and program all control and monitor modules for smoke control. All this information can be entered on Worksheet 3 prior to entering full point programming.

Weekly Testing. The last item to be considered is a Control-By-Time (CBT) equation for weekly automatic testing of the smoke control system. Dedicated systems require, per UL 864, weekly testing of the smoke control system. This can be accomplished automatically by the FACP when programmed to do so using the time (TIM) operator. Two reverse zones can be used to provide testing intervals for the fans and dampers.

NOTE: The supply and exhaust fans cannot be ON when all of the associated dampers are CLOSED

Z199	TIM(SU 1.00 1.10)	Reverse software zone activated once a week for 10 minutes.
Z200	TIM(SU 1.05 1.10)	Reverse software zone activated once a week for 5 minutes.

Equations such as these must be created to allow for all elements of the smoke control system to operate as they would in a fire condition. Once created they must be *OR*ed together with the existing equations for a particular device. For instance, the stairtower fan, elevator fan, and dampers could use Z199 to activate the control modules, which in turn will open or turn on the devices. The supply and exhaust fans could use Z200 to activate the control modules, which would turn on the fans five minutes after the dampers open. For example, the new equation for the elevator fan would be:

OR(Z199 Z201 Z202 Z203 Z204 Z205 Z206 Z207 Z208 Z209)

NOTE: The AM2020/AFP1010 must be programmed for receiving unit operation. Without this feature, troubles encountered during the weekly testing may be restored at the conclusion of the test, and remain undetected.

Once all programming on the FACP has been completed, the system can be tested for proper operation. If the testing is successful, the smoke control system would be fully operational.

3.10.2 Non-dedicated System Design

Figure 3.35 will also be used to depict a Non-dedicated System example. Once again, the building is eight stories, where each floor is designated as a smoke control zone. There is also a stairtower and elevator shaft to consider. The system depicted here will utilize pressurization where all nonsmoke zones will be pressurized. The stairtower will use a multiple injection system and the elevator hoistway will only be pressurized to prevent the migration of smoke (it will not be used for evacuation). We will also assume that the FACP and associated devices for fire protection are already installed. There are six smoke detectors and one pull station on each floor. There is also one waterflow switch per floor on the sprinkler system to detect the flow of water on each floor.

In the dedicated system, all fans were defined as normally off, all supply dampers and all exhaust dampers were defined as normally closed because the system was not used for any purpose other than smoke control. In the Non-dedicated System, the stairtower and elevator hoistway portion of the system will function the same as the dedicated system, but the HVAC equipment serves the dual purpose of HVAC control during normal conditions, and smoke control during a fire condition. Because of this, the dampers and fans for the zoned smoke control portion of the system can not be assumed to be in any one state. In order to ensure that smoke control takes precedence over HVAC functions, the control modules, which normally control the devices (fans or dampers), will be configured as Form-C relays or be wired to control contactors. The contactors will in turn control the devices and, if necessary, cut power from the HVAC controls, as shown in Section 5 “Ratings and Wiring Diagrams”. The HVAC system for this example is a Central System with recirculation capability.

Preliminary Design Considerations

Once the type of system has been determined, the designer must determine the number of fans and dampers that are to be controlled/monitored. In this example we have four fans; one stairtower fan, one elevator hoistway fan, one HVAC supply fan, and one HVAC return fan. There are also 33 dampers; two dampers on the supply duct per floor, two dampers on the return duct per floor, and one damper in the recirculation duct.

The next step is to determine the capabilities of each fan/damper and the corresponding switch group type. All four fans need to have the capability to turn on in response to a fire. The fans do not need to have the capability of being turned off in response to a fire. We do want to ensure that the fans turn on when a fire is detected, so the fans also require the capability of being monitored for the on state.

The dampers on each floor can be broken into two groups - supply dampers and return dampers. The dampers on the supply duct need to be open for all nonsmoke zones and closed for the smoke zone, while overriding the HVAC controls. Since we do not know the current state of the supply dampers, they need to have the capability to be opened and closed. The dampers on the exhaust duct need to be open for the fire floor and closed for all nonsmoke zones, while overriding the HVAC controls. Since we do not know the current state of the exhaust dampers, they need to have the capability to be opened and closed as well. It is extremely important to make sure that the dampers which need to be open are open and that the dampers which need to be closed are closed, so for this example all floor dampers will require verification of when they are open and when they are closed.

The recirculation damper must have the capability to close in response to any fire condition. It must also have the capability to verify that it is closed. The results of the capabilities required for each device are as follows:

Stairtower Fan (1):	capability to turn on and verify on state
Elevator Fan (1):	capability to turn on and verify on state
Supply Fan (1):	capability to turn on and verify on state
Exhaust Fan (1):	capability to turn on and verify on state
Supply Dampers (16):	capability to open and close damper and verify open and closed state
Exhaust Dampers (16):	capability to open and close damper and verify open and closed state
Recirculation Damper (1):	capability to close damper and verify closed state

By referencing Table 3.3 the corresponding switch group type can be obtained.

Stairtower Fan (1):	Switch Group Type 5 ($CON_{ON/OP}$ and $VER_{ON/OP}$)
Elevator Fan (1):	Switch Group Type 5 ($CON_{ON/OP}$ and $VER_{ON/OP}$)
Supply Fan (1):	Switch Group Type 5 ($CON_{ON/OP}$ and $VER_{ON/OP}$)
Exhaust Fan (1):	Switch Group Type 5 ($CON_{ON/OP}$ and $VER_{ON/OP}$)
Supply Dampers (16):	Switch Group Type 9 ($CON_{ON/OP}$, $CON_{OFF/CL}$, $VER_{ON/OP}$ and $VER_{OFF/CL}$)
Exhaust Dampers (16):	Switch Group Type 9 ($CON_{ON/OP}$, $CON_{OFF/CL}$, $VER_{ON/OP}$ and $VER_{OFF/CL}$)
Recirculation Damper (1):	Switch Group Type 1 ($CON_{OFF/CL}$, and $VER_{OFF/CL}$)

For each capability a device is to have, a control or monitor module will be necessary at the fan or damper. Each control (CON) capability will require a control module (CM) and each verification (VER) capability will require an monitor module (MM).

Stairtower Fan (1):	$CON_{ON/OP}$ and $VER_{ON/OP}$	1 - CM 1 - MM
Elevator Fan (1):	$CON_{ON/OP}$ and $VER_{ON/OP}$	1 - CM 1 - MM
Supply Fan (1):	$CON_{ON/OP}$ and $VER_{ON/OP}$	1 - CM 1 - MM
Exhaust Fan (1):	$CON_{ON/OP}$ and $VER_{ON/OP}$	1 - CM 1 - MM
Supply Dampers (16):	$CON_{ON/OP}$, $CON_{OFF/CL}$, $VER_{ON/OP}$ and $VER_{OFF/CL}$	32 - CM 32 - MM
Exhaust Dampers (16):	$CON_{ON/OP}$, $CON_{OFF/CL}$, $VER_{ON/OP}$ and $VER_{OFF/CL}$	32 - CM 32 - MM
Recirculation Damper (1):	$CON_{OFF/CL}$, and $VER_{OFF/CL}$	1 - CM 1 - MM

For our example a total of 69 CMs and 69 MMs will be required.

The next step is to determine the configurations for the SCSs and/or SCEs to be used. Although there are many ways to configure the SCS⁄SCE pairs, the following configuration will be used for this example:

- The four type 5 fans and the one type 1 damper will be on one SCS with three switch groups unused.
- The 32 type 9 dampers will be on two SCS⁄SCE pairs.

The configurations selected above are reference numbers 28 and 16 respectively from Table 3.5. The dipswitch settings from Table 3.5 for each SCS should be noted for installation purposes at this time.

Dipswitches 1-5 from reference number 28 of Table 3.5 set four of the switch groups for switch group type 5 and four for switch group type 1. Dipswitch 6 is in the ON position to select the FSCS mode. Dipswitch 7 is in the OFF position to select Non-dedicated System operation. Dipswitch 8 is OFF so that the end-of-line termination resistor is not installed. Dipswitch 8 is only set to the ON position when the particular SCS is the last device on the EIA-485 data line.

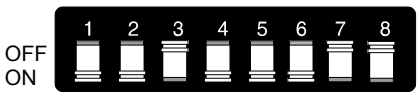

This setting will be the same for two SCS⁄SCE pairs. Dipswitches 1-5 from reference number 16 of Table 3.5 set all the switch groups for switch group type 9. Dipswitch 6 is in the ON position to select the FSCS mode. Dipswitch 7 is in the OFF position to select Non-dedicated System operation. Dipswitch 8 is OFF for the first SCS⁄SCE pair so that the end-of-line termination resistor is not installed. Dipswitch 8 is ON for the second SCS⁄SCE pair so that the end-of-line termination resistor is installed. Dipswitch 8 is only set to the ON position when the particular SCS is the last device on the EIA-485 data line.

After the dipswitch settings have been determined, an EIA-485 device address for each SCS must be determined. As stated before, there are 32 available addresses. So, if no other EIA-485 devices are present on the data line (such as annunciators) the maximum number of SCS⁄SCE pairs allowed is 32. For our example, we only need three available addresses. Let us assume that addresses 5, 6, and 7 are available. As shown in Table 3.4 and Figure 3.4, set the dipswitches and addresses of each SCS.

The next step is to categorize all protocol points as needed, unneeded, or unused, as discussed in Section 2.4.2. Using the bottom portion of worksheet 2 as a guide, our example for the SCS at address 5 would look like the following:

Point Assignments:		classification	type ID	Point Assignments:		classification	type ID
1	($CON_{ON/OP}$)	needed	_____	17	($CON_{ON/OP}$)	unneeded	_____
2	($CON_{OFF/CL}$)	unneeded	_____	18	($CON_{OFF/CL}$)	needed	_____
3	($VER_{ON/OP}$)	needed	_____	19	($VER_{ON/OP}$)	unneeded	_____
4	($VER_{OFF/CL}$)	unneeded	_____	20	($VER_{OFF/CL}$)	needed	_____
5	($CON_{ON/OP}$)	needed	_____	21	($CON_{ON/OP}$)	unused	_____
6	($CON_{OFF/CL}$)	unneeded	_____	22	($CON_{OFF/CL}$)	unused	_____
7	($VER_{ON/OP}$)	needed	_____	23	($VER_{ON/OP}$)	unused	_____
8	($VER_{OFF/CL}$)	unneeded	_____	24	($VER_{OFF/CL}$)	unused	_____
9	($CON_{ON/OP}$)	needed	_____	25	($CON_{ON/OP}$)	unused	_____
10	($CON_{OFF/CL}$)	unneeded	_____	26	($CON_{OFF/CL}$)	unused	_____
11	($VER_{ON/OP}$)	needed	_____	27	($VER_{ON/OP}$)	unused	_____
12	($VER_{OFF/CL}$)	unneeded	_____	28	($VER_{OFF/CL}$)	unused	_____
13	($CON_{ON/OP}$)	needed	_____	29	($CON_{ON/OP}$)	unused	_____
14	($CON_{OFF/CL}$)	unneeded	_____	30	($CON_{OFF/CL}$)	unused	_____
15	($VER_{ON/OP}$)	needed	_____	31	($VER_{ON/OP}$)	unused	_____
16	($VER_{OFF/CL}$)	unneeded	_____	32	($VER_{OFF/CL}$)	unused	_____

For AM2020/AFP1010 only: After categorizing all protocol points, the software type IDs can be selected as discussed in Section 2.4.2. All protocol points that are needed get assigned software type IDs from Table 3.13. All protocol points that are unneeded do not get a software type ID and do not get programmed into FACP memory. All protocol points that are unused get assigned the software type ID ACON. Use worksheet 2 in Appendix B to organize this information.

Installation

At this point, all the preliminary design work is complete. The next step is to install all control modules and monitor modules on the required devices, as shown in Section 5 “Ratings and Wiring Diagrams”, and install the SCS⁄SCE pairs as described in Section 2.2. Once the installation of all fans, dampers, control modules, monitor modules, SCSs, and SCEs is complete, the FACP requires additional programming for smoke control.

Programming (AM2020/AFP1010 Example)

Programming SCS annunciator addresses, linking annunciator points with control or monitor modules, assigning control and monitor Type IDs, and creating control-by-event equations to obtain desired fan and damper activity, are the steps required to complete the smoke control setup. Refer to Programming in Section 2.4 for descriptions of the various programming processes. Following is a step-by-step description of AM2020/AFP1010 programming for this example.

The first step to programming the FACP for smoke control is to define each SCS address in FACP memory. Refer to Section 2.4.1, EIA-485 Device Addressing, for instructions. SCS addresses 5, 6, and 7 must to be entered for this example.

The next step is to program all EIA-485 protocol points, including software type IDs. By referencing the worksheets, all the information necessary is close at hand.

Point assignments for SCS at address 5:

Point Assignments:		classification	type ID	Point Assignments:		classification	type ID
1	($CON_{ON/OP}$)	needed	AFCM	17	($CON_{ON/OP}$)	unneeded	-
2	($CON_{OFF/CL}$)	unneeded	-	18	($CON_{OFF/CL}$)	needed	ACON
3	($VER_{ON/OP}$)	needed	AMON	19	($VER_{ON/OP}$)	unneeded	-
4	($VER_{OFF/CL}$)	unneeded	-	20	($VER_{OFF/CL}$)	needed	AMON
5	($CON_{ON/OP}$)	needed	AFCM	21	($CON_{ON/OP}$)	unused	ACON
6	($CON_{OFF/CL}$)	unneeded	-	22	($CON_{OFF/CL}$)	unused	ACON
7	($VER_{ON/OP}$)	needed	AMON	23	($VER_{ON/OP}$)	unused	ACON
8	($VER_{OFF/CL}$)	unneeded	-	24	($VER_{OFF/CL}$)	unused	ACON
9	($CON_{ON/OP}$)	needed	AFCM	25	($CON_{ON/OP}$)	unused	ACON
10	($CON_{OFF/CL}$)	unneeded	-	26	($CON_{OFF/CL}$)	unused	ACON
11	($VER_{ON/OP}$)	needed	AMON	27	($VER_{ON/OP}$)	unused	ACON
12	($VER_{OFF/CL}$)	unneeded	-	28	($VER_{OFF/CL}$)	unused	ACON
13	($CON_{ON/OP}$)	needed	AFCM	29	($CON_{ON/OP}$)	unused	ACON
14	($CON_{OFF/CL}$)	unneeded	-	30	($CON_{OFF/CL}$)	unused	ACON
15	($VER_{ON/OP}$)	needed	AMON	31	($VER_{ON/OP}$)	unused	ACON
16	($VER_{OFF/CL}$)	unneeded	-	32	($VER_{OFF/CL}$)	unused	ACON

The control modules which control the ON capability of the fans are configured as Form-C relays when in a Non-dedicated system. See Section 4.2, The Control Module, for more information.

Point Assignments:		classification	type ID	Point Assignments:		classification	type ID
33	($CON_{ON/OP}$)	unused	ACON	49	($CON_{ON/OP}$)	unused	ACON
34	($CON_{OFF/CL}$)	unused	ACON	50	($CON_{OFF/CL}$)	unused	ACON
35	($VER_{ON/OP}$)	unused	ACON	51	($VER_{ON/OP}$)	unused	ACON
36	($VER_{OFF/CL}$)	unused	ACON	52	($VER_{OFF/CL}$)	unused	ACON
37	($CON_{ON/OP}$)	unused	ACON	53	($CON_{ON/OP}$)	unused	ACON
38	($CON_{OFF/CL}$)	unused	ACON	54	($CON_{OFF/CL}$)	unused	ACON
39	($VER_{ON/OP}$)	unused	ACON	55	($VER_{ON/OP}$)	unused	ACON
40	($VER_{OFF/CL}$)	unused	ACON	56	($VER_{OFF/CL}$)	unused	ACON
41	($CON_{ON/OP}$)	unused	ACON	57	($CON_{ON/OP}$)	unused	ACON
42	($CON_{OFF/CL}$)	unused	ACON	58	($CON_{OFF/CL}$)	unused	ACON
43	($VER_{ON/OP}$)	unused	ACON	59	($VER_{ON/OP}$)	unused	ACON
44	($VER_{OFF/CL}$)	unused	ACON	60	($VER_{OFF/CL}$)	unused	ACON
45	($CON_{ON/OP}$)	unused	ACON	61	($CON_{ON/OP}$)	unused	ACON
46	($CON_{OFF/CL}$)	unused	ACON	62	($CON_{OFF/CL}$)	unused	ACON
47	($VER_{ON/OP}$)	unused	ACON	63	($VER_{ON/OP}$)	unused	ACON
48	($VER_{OFF/CL}$)	unused	ACON	64	($VER_{OFF/CL}$)	unused	ACON

The point assignments for the SCS/SCE at address 6 and the SCS/SCE at address 7 are the same. Each are as follows:

Point Assignments:		classification	type ID	Point Assignments:		classification	type ID
1	($CON_{ON/OP}$)	needed	ACON	17	($CON_{ON/OP}$)	needed	ACON
2	($CON_{OFF/CL}$)	needed	ACON	18	($CON_{OFF/CL}$)	needed	ACON
3	($VER_{ON/OP}$)	needed	AMON	19	($VER_{ON/OP}$)	needed	AMON
4	($VER_{OFF/CL}$)	needed	AMON	20	($VER_{OFF/CL}$)	needed	AMON
5	($CON_{ON/OP}$)	needed	ACON	21	($CON_{ON/OP}$)	needed	ACON
6	($CON_{OFF/CL}$)	needed	ACON	22	($CON_{OFF/CL}$)	needed	ACON
7	($VER_{ON/OP}$)	needed	AMON	23	($VER_{ON/OP}$)	needed	AMON
8	($VER_{OFF/CL}$)	needed	AMON	24	($VER_{OFF/CL}$)	needed	AMON
9	($CON_{ON/OP}$)	needed	ACON	25	($CON_{ON/OP}$)	needed	ACON
10	($CON_{OFF/CL}$)	needed	ACON	26	($CON_{OFF/CL}$)	needed	ACON
11	($VER_{ON/OP}$)	needed	AMON	27	($VER_{ON/OP}$)	needed	AMON
12	($VER_{OFF/CL}$)	needed	AMON	28	($VER_{OFF/CL}$)	needed	AMON
13	($CON_{ON/OP}$)	needed	ACON	29	($CON_{ON/OP}$)	needed	ACON
14	($CON_{OFF/CL}$)	needed	ACON	30	($CON_{OFF/CL}$)	needed	ACON
15	($VER_{ON/OP}$)	needed	AMON	31	($VER_{ON/OP}$)	needed	AMON
16	($VER_{OFF/CL}$)	needed	AMON	32	($VER_{OFF/CL}$)	needed	AMON

Point Assignments:		classification	type ID	Point Assignments:		classification	type ID
33	($CON_{ON/OP}$)	needed	ACON	49	($CON_{ON/OP}$)	needed	ACON
34	($CON_{OFF/CL}$)	needed	ACON	50	($CON_{OFF/CL}$)	needed	ACON
35	($VER_{ON/OP}$)	needed	AMON	51	($VER_{ON/OP}$)	needed	AMON
36	($VER_{OFF/CL}$)	needed	AMON	52	($VER_{OFF/CL}$)	needed	AMON
37	($CON_{ON/OP}$)	needed	ACON	53	($CON_{ON/OP}$)	needed	ACON
38	($CON_{OFF/CL}$)	needed	ACON	54	($CON_{OFF/CL}$)	needed	ACON
39	($VER_{ON/OP}$)	needed	AMON	55	($VER_{ON/OP}$)	needed	AMON
40	($VER_{OFF/CL}$)	needed	AMON	56	($VER_{OFF/CL}$)	needed	AMON
41	($CON_{ON/OP}$)	needed	ACON	57	($CON_{ON/OP}$)	needed	ACON
42	($CON_{OFF/CL}$)	needed	ACON	58	($CON_{OFF/CL}$)	needed	ACON
43	($VER_{ON/OP}$)	needed	AMON	59	($VER_{ON/OP}$)	needed	AMON
44	($VER_{OFF/CL}$)	needed	AMON	60	($VER_{OFF/CL}$)	needed	AMON
45	($CON_{ON/OP}$)	needed	ACON	61	($CON_{ON/OP}$)	needed	ACON
46	($CON_{OFF/CL}$)	needed	ACON	62	($CON_{OFF/CL}$)	needed	ACON
47	($VER_{ON/OP}$)	needed	AMON	63	($VER_{ON/OP}$)	needed	AMON
48	($VER_{OFF/CL}$)	needed	AMON	64	($VER_{OFF/CL}$)	needed	AMON

All of the protocol points with software type IDs must be entered in FACP memory. Refer to Table 3.13 for protocol point software type IDs and Section 2.4.4, Full Point Programming, for instructions on programming EIA-485 protocol points.

After programming of all protocol points is complete, the programming associated with the control and monitor modules must take place, including software type IDs, Control-By-Event, and protocol point mapping. This will be accomplished by using full point programming. Before beginning full point programming, determine all parameters associated with each control module and monitor module. Worksheet 3 will assist in the organization of information required for programming control and monitor modules.

The software type IDs for control and monitor modules are listed in Table 3.14. For this example, all fan control modules require the software type IDs CMXC, all damper control modules require the software type ID CMXS, and all monitor modules require the software type ID NOA.

Once the software type IDs have been determined, Control-By-Event (CBE) programming must be tackled. Before programming the FACP with CBE, some thought must be given to a smoke control scheme.

- How will the smoke control system be activated?
- What devices will be activated first, second, etc.?
- What detectors will activate what parts of the smoke control system?

NOTE:
1. Duct detectors must not be used to activate the smoke control system.
2. Manual pull stations must not be used to activate zoned smoke control, but can be used to activate stairtower pressurization or elevator hoistway protection.

For this example, we have six smoke detectors, a waterflow switch, and one manual pull station per floor, where each floor is designated as a smoke control zone. Upon activation of a smoke detector or a waterflow switch, the system should pressurize the stairtower and elevator hoistway, close the supply dampers on the fire floor, open the supply dampers on nonfire floors, open the exhaust dampers on the fire floor, close the exhaust dampers on nonfire floors, close the recirculation damper, and turn on the supply and exhaust fans. Supply and exhaust fans should not be turned on until all dampers required to be open have been opened and all dampers required to be closed have been closed. After the first fire alarm, subsequent fire alarms will not initiate any further Control-By-Event functions for smoke control elements within the system. Additional control after the first fire alarm requires manual intervention at the SCS/SCE.

Upon activation of a pull station, the system should only pressurize the stairtower and elevator hoistway. The zoned smoke control must not be activated from manual pull stations because there is no guarantee that the pull station activated is on the fire floor.

Now that a general scheme has been worked out, we can begin determining CBE programming for the FACP.

The Control-By-Event equations for control modules and the Control-By-Event lists for monitor modules (if used) require quite a bit of thought before being programmed. Control-By-Event equations provide the necessary control capabilities during automatic operation of the smoke control station. For instance, if a fan is to be turned in response to a fire on a particular floor, the CBE equation for the control module which controls that fan must reference all of the detectors on that floor. When one of the detectors is active as a result of a fire, the CBE equation becomes TRUE, activating the control module and turning on the fan. If the designer is unfamiliar with CBE programming, Appendix A, Control-By-Event, should be read before proceeding.

NOTE: Some of the CBE equations in this example exceed the 14 byte limitation called out in Appendix A. They were intentionally left intact to show the complete equation and to reduce complexity. Equations larger than 14 bytes must be broken into smaller groups of equations as shown in Appendix A.

The first CBE equations to be determined are for the stairtower and elevator hoistway fans. The CBE equations for the stairtower and the elevator hoistway are identical to those determined for the Dedicated System example. Refer to Section 2.5-1 for detailed information on how these equations were determined.

The CBE equations for the first eight reverse software zones:

OR(LxD1 LxD2 LxD3 LxD4 LxD5 LxD6 LxM2)

where x is one of the eight loops (1-8) that corresponds to the appropriate floor.

The CBE equation for Z209:

OR(L1M1 L2M1 L3M1 L4M1 L5M1 L6M1 L7M1 L8M1)

The CBE equation for the $CON_{ON/OP}CM$ of the stairtower fan:

OR(Z201 Z202 Z203 Z204 Z205 Z206 Z207 Z208 Z209)

The CBE equation for the $CON_{ON/OP}CM$ of the elevator fan:

OR(Z201 Z202 Z203 Z204 Z205 Z206 Z207 Z208 Z209)

If any device in the building becomes ACTIVE as a result of a fire, one of the eight CBE equations for the reverse zones would become TRUE, which would cause that reverse zone to become ACTIVE. The activation of that zone would cause the equations for L9M1 and L9M3 to be TRUE, which would cause the control modules to be ACTIVE. When the control modules become active the fans for the stairtower and elevator hoistway will turn on.

The next set of equations to be determined is for the supply dampers. There are two control modules per damper, one with the capability to close the dampers (the control module is referred to as a $CON_{OFF/CL}CM$) and one with the capability to open the dampers (the control module is referred to as a $CON_{ON/OP}CM$). Let us assume that the four control modules for the two supply dampers are wired on the SLC loop for the floor that they serve. For instance, the $CON_{ON/OP}CM$ for the first supply damper on floor 3 would be L3M3 and the $CON_{ON/OP}CM$ for the second supply damper would be L3M7. The $CON_{OFF/CL}CM$ for the first supply damper on floor 3 would be L3M4 and the $CON_{OFF/CL}CM$ for the second supply damper would be L3M8 (L3M5 and L3M6 would be the monitor modules for one

damper, L3M9 and L3M10 would be the monitor modules for the second). The two supply dampers per floor are to close when a fire is detected on that floor and they are to open when a fire is detected on an alternate floor. However, the dampers are not to open or close in response to the manual pull station. The CBE equation for the two $CON_{ON/OP}$CMs of each floor would be:

module #:	CBE equation:
L1M3 and L1M7	OR(Z202 Z203 Z204 Z205 Z206 Z207 Z208)
L2M3 and L2M7	OR(Z201 Z203 Z204 Z205 Z206 Z207 Z208)
L3M3 and L3M7	OR(Z201 Z202 Z204 Z205 Z206 Z207 Z208)
L4M3 and L4M7	OR(Z201 Z202 Z203 Z205 Z206 Z207 Z208)
L5M3 and L5M7	OR(Z201 Z202 Z203 Z204 Z206 Z207 Z208)
L6M3 and L6M7	OR(Z201 Z202 Z203 Z204 Z205 Z207 Z208)
L7M3 and L7M7	OR(Z201 Z202 Z203 Z204 Z205 Z206 Z208)
L8M3 and L8M7	OR(Z201 Z202 Z203 Z204 Z205 Z206 Z207)

If a device on floor 6, with the exception of the manual pull station, becomes ACTIVE, the CBE equation for Z206 will become TRUE. As a result, all equations that contain Z206 in them will be TRUE. When the equations become TRUE, the $CON_{ON/OP}$CMs become ACTIVE and open all the dampers except those on floor 6. The CBE equations for L6M3 and L6M7 are the only equations that will be FALSE in this case and subsequently not open the dampers on floor 6.

The CBE equation for the $CON_{OFF/CL}$CMs of each floor would be:

OR(Z20x)

where x is one of the eight reverse software zones corresponding to the appropriate floor. If a device on floor 6, with the exception of the manual pull station, becomes active, the CBE equations for L6M4 and L6M8 would become TRUE. When the equations become TRUE the $CON_{OFF/CL}$CMs are active and close the dampers.

The next set of equations to be determined is for the exhaust dampers. Let us assume that the four control modules for the exhaust dampers are wired on the SLC loop for the floor that they serve. For instance the two $CON_{ON/OP}$CMs for floor 5 would be L5M11 and L5M15, and the two $CON_{OFF/CL}$CMs for floor 5 would be L5M12 and L5M16 (L3M13 and L3M14 would be the monitor modules for one damper, L3M17 and L3M18 would be the monitor modules for the second). The two return dampers per floor are to open when a fire is detected on that floor and they are to close when a fire is detected on an alternate floor. However, the dampers are not to open or close in response to the manual pull station. The CBE equation for the two $CON_{ON/OP}$CMs of each floor would be:

OR(Z20x)

where x is one of the eight reverse software zones corresponding to the appropriate floor. If a device on floor 6, with the exception of the manual pull station, becomes active, the CBE equations for L6M11 and L6M15 would become TRUE. When the equations become TRUE the $CON_{OFF/CL}$CMs are active and open the dampers.

The CBE equation for the $CON_{OFF/CL}$CMs of each floor would be:

module #:	CBE equation:
L1M3 and L1M7	OR(Z202 Z203 Z204 Z205 Z206 Z207 Z208)
L2M3 and L2M7	OR(Z201 Z203 Z204 Z205 Z206 Z207 Z208)
L3M3 and L3M7	OR(Z201 Z202 Z204 Z205 Z206 Z207 Z208)
L4M3 and L4M7	OR(Z201 Z202 Z203 Z205 Z206 Z207 Z208)
L5M3 and L5M7	OR(Z201 Z202 Z203 Z204 Z206 Z207 Z208)
L6M3 and L6M7	OR(Z201 Z202 Z203 Z204 Z205 Z207 Z208)
L7M3 and L7M7	OR(Z201 Z202 Z203 Z204 Z205 Z206 Z208)
L8M3 and L8M7	OR(Z201 Z202 Z203 Z204 Z205 Z206 Z207)

If a device on floor 6, with the exception of the manual pull station, becomes ACTIVE, the CBE equation for Z206 will become TRUE. As a result, all equations that contain Z206 in them will be TRUE. When the equations become TRUE, the $CON_{ON/OP}$CMs become ACTIVE and close all the dampers except those on floor 6. The CBE equations for L6M3 and L6M7 are the only equations that will be FALSE in this case and subsequently not close the dampers on floor 6.

The recirculation damper has one control module and one monitor module. If they were wired on SLC loop 9, the $CON_{OFF/CL}$CM would be L9M5 and the $VER_{OFF/CL}$MM would be L9M6. The recirculation damper must close in response to any detection of a fire. By using the same reverse zones as the stairtower fan and elevator hoistway equations used, the equation would be as follows:

OR(Z201 Z202 Z203 Z204 Z205 Z206 Z207 Z208 Z209)

If any device in the building becomes active as a result of a fire, one of the eight reverse zone CBE equations would become TRUE, which would cause that reverse zone to become active. The activation of that zone would cause the equations for L9M5 to be TRUE, which would cause the $CON_{OFF/CL}$CM to be active. When the control module becomes active the damper for the recirculation air duct will close.

The CBE equations for the supply and exhaust fans are a little more complex than the equations previously discussed. In order to prevent damage to ductwork, the supply and exhaust fans should not be turned on until the dampers that need to opened are open and the dampers that need to be closed are closed. So, not only do the CBE equations have to check when a detector is in alarm, but they have to check the monitor modules on the dampers to ensure the open/closed position. The supply fan has one control module for controlling the ON capability of the supply fan and the exhaust fan has one control module for controlling the ON capability of the exhaust fan (both control modules are referred to as $CON_{ON/OP}$CMs). Let us assume that both control modules are wired on SLC loop 9 of the FACP. These would be the seventh and ninth modules on this loop. The control module for the supply fan would be L9M7 and the control module for the exhaust fan would be L9M9 (the monitor modules would be L9M8 and L9M10 respectively).

There are two monitor modules per damper and there are four dampers per floor (two supply and two exhaust). The supply dampers must be checked to make sure one of the dampers is closed. The exhaust dampers must be checked to ensure one of the dampers is open. Also, the recirculation damper must be checked to ensure that it is closed. Let us assume that the four monitor modules for the dampers are wired on the SLC loop for the floor that they serve. As stated earlier, the two monitor modules for one supply damper on floor 3 would be L3M5 and L5M6 and the two monitor modules for the other supply damper on floor 3 would be L3M9 and L3M10 (where LxM5 and LxM9 are the $VER_{ON/OP}$MMs and LxM6 and LxM10 are the $VER_{OFF/CL}$MMs). The two monitor modules of one exhaust damper on floor 5 would be L5M13 and L5M14 and the two monitor modules for the other exhaust damper on floor 5 would be L5M17 and L5M18 (where LxM13 and LxM17 are the $VER_{ON/OP}$MMs and LxM14 and LxM18 are the $VER_{OFF/CL}$MMs).

If eight more reverse software zones are defined (Z211, Z212, Z213, Z214, Z215, Z216, Z217, and Z218), one for each floor, and programmed with a CBE of:

AND(Z20x LxM6 LxM10 LxM13 LxM17)

where x is one of the eight loops (1-8) that corresponds to the appropriate floor, then the CBE equations for both L9M3 and L9M4 would be:

AND(OR(Z211 Z212 Z213 Z214 Z215 Z216 Z217 Z218) L9M6)

If any device in the building becomes active as a result of a fire (except the manual pull stations) AND both the supply dampers for that floor are closed and the exhaust dampers for that floor are open, one of the eight reverse zone CBE equations would become TRUE, which would cause that reverse zone to become active. The activation of one of the reverse software zones AND L9M6 active (indicating that the recirculation damper is closed) would cause the equations for L9M7 and L9M9 to be TRUE, which would cause the control modules to be active. When the control modules become active the supply fan and the exhaust fan will turn on.

Once CBE equations have been determined for all devices being used for smoke control, each control and monitor module must be mapped to the appropriate EIA-485 protocol point. This process is very important because a control or monitor module is linked to its associated protocol point within a particular switch group for proper communication. The control module and monitor module information for the fans is listed below:

		loop # / module #	SCS address/point #
Staitower fan	$CON_{ON/OP}$CM	L9M1	A5P1
	$VER_{ON/OP}$MM	L9M2	A5P3
Elevator fan	$CON_{ON/OP}$CM	L9M3	A5P5
	$VER_{ON/OP}$MM	L9M4	A5P7
Supply fan	$CON_{ON/OP}$CM	L9M7	A5P9
	$VER_{ON/OP}$MM	L9M8	A5P11
Exhaust fan	$CON_{ON/OP}$CM	L9M9	A5P13
	$VER_{ON/OP}$MM	L9M10	A5P15
Recirculation damper	$CON_{OFF/CL}$CM	L9M5	A5P17
	$VER_{OFF/CL}$MM	L9M6	A5P19

Mapping in this fashion causes switch group 1 for the SCS at address 5 to control and monitor the fan for the staitower. Similarly, Switch group 2 would be for the elevator fan, switch group 3 would be for the supply fan, switch group 4 would be for the exhaust fan, and switch group 5 would be for the recirculation damper. All of the dampers must be mapped in the same way.

Once all mapping information is determined, there are only three more items to keep in mind before entering full point programming:

1. All monitor modules used for smoke control must have the tracking option enabled. This is set by answering "Y" to the question:
   `IS THE TRACKING OPTION TO BE ENABLED FOR THIS DEVICE? (Y=YES,N=NO) :`
2. All control modules used for smoke control must have the walk test option disabled. This is set by answering "N" to the question:
   `IS THE WALK TEST OPTION TO BE ENABLED FOR THIS DEVICE? (Y=YES,N=NO) :`
3. All control modules used for smoke control must have the signal silence option enabled. This is set by answering "Y" to the question:
   `IS THE SIGNAL SILENCE OPTION TO BE ENABLED FOR THIS DEVICE? (Y=YES,N=NO) :`

With all software type IDs determined, the CBE equations determined, the protocol point mapping determined, and the features listed above kept in mind, the designer can enter full point programming and program all control and monitor modules for smoke control.

Once all programming on the FACP has been completed, the system can be tested for proper operation. If the testing is successful, the smoke control system would be fully operational.

Section 4: Restrictions

4.1 Equipment

Pressurization is the most desired means of controlling smoke. If at all possible utilize pressurization over airflow. Airflow is not the most practical method of limiting the movement of smoke because of the large quantities of air required.

The process of purging is not an acceptable method of smoke control, however, it can be used as a supplement to airflow or pressurization.

The FSCS must provide full monitoring and manual override control capability for all smoke control systems and equipment.

Smoke dampers are classified as 0, I, II, III, or IV based on the amount of leakage they allow. See Table 2.2 for the maximum leakage rates allowed for each classification.

Duct detectors should not be used for activation of the smoke control systems. Manual pull stations should not be used for the activation of zoned smoke control systems, but can be used to activate stairtower pressurization systems.

One of the main concerns with single-injection systems is that the pressurization of the stairtower could fail when a few doors near the supply fan are open. The supply air being injected into the stairtower for the purpose of pressurization could be lost through these openings, thus preventing the pressure differences necessary to limit the movement of smoke. For this reason it is recomended that single injection systems be used in buildings that are eight stories or less. Buildings of more than eight stories should utilize a multiple injection system.

For systems implementing elevator smoke control, the open vent at the top of the hoistway should be eliminated.

A graphic representation for the location and function of each switch is to be mounted adjacent to the FSCS. This graphic representation must clearly identify each switch.

4.2 Installation

The dipswitch setting of all dipswitches OFF is a factory setting and must not be used.

There are only 32 valid addresses in the FACP for each EIA-485 circuit, numbered 1-32, and each address provides 64 points of monitor and control capability. Each SCS must be set to one of the available addresses.

The EIA-485 circuit cannot be T-Tapped; it must be wired in a continuous fashion from the control panel to the SCS-8.

The maximum wiring distance between the panel and the last SCS-8 or annunciator is 6,000 feet @ 16 AWG. However, all SCS-8⁄SCE-8 modules must be contained in the same room with the FACP or Network Control Annunciator in FSCS mode.

The built-in 120 ohm resistor must be installed on the SCS-8 module if it is located at the physical end of the EIA-485 Loop, by turning ON dipswitch 8 on the SCS-8. Turn OFF dipswitch 8 on all other SCS-8 modules.

For Canadian applications, the Smoke Control System must be installed in an enclosure separate from the main fire alarm control panel, and all wiring between the two cabinets must be in conduit.

4.3 Operation

According to the requirements of NFPA 92A, after the first alarm, automatic operation will be inhibited for the entire FSCS (i.e. lockout). Manual intervention is then required to make any changes to the state of smoke control points.

After the first fire alarm, subsequent fire alarms will not initiate any further Control-By-Event functions for smoke control elements within the system. Additional control after the first fire alarm requires manual intervention at the SCS⁄SCE.

All smoke control elements (fans, dampers, etc.) must be configured to provide feedback from all control and monitor points present in the toggle switch group type. Dedicated Systems employ feedback constantly to monitor system operation when the SCS⁄SCE is in manual mode only. If the correct feedback is not received within the specified trouble delay time, a trouble condition will be indicated within the toggle switch group and at the FACP.

Reset of the FACP will be inhibited until all SCS⁄SCE switches are returned to the AUTO position.

For FSCS Mode B operation, see Appendix C.2, “Mode B Operation”.

The HVAC mode is not a listed smoke control function and should never be used as such. HVAC mode without manual control is the only mode supported by the INA, as well as the NFS-640 without an NCA and the NFS-320/NFS2-640 without an NCA-2.

4.4 Programming

If a toggle switch group number is not to be used:

- program all four associated annunciator points as software type ACON (AM2020/AFP1010)
- program all four associated annunciator points to any unused control point (NFS2-3030, NFS-640).
- program all four associated annunciator points, using ACS programming, to the source N000L01M001 when smoke control modules are on an NCA or NCA-2 in FSCS mode.

If an SCE is not used:

- program the associated annunciator points (33 through 64) as software type ACON for the respective SCS address (AM2020/AFP1010).
- program the associated annunciator points (33 through 64) to any unused control point (NFS2-3030, NFS2-640, NFS-320)
- program the associated annunciator points (33 through 64), using ACS programming, to the source N000L01M001 when smoke control modules are on an NCA or NCA-2 in FSCS mode.

All inputs that will initiate smoke control:

- must be mapped to Z240 (AM2020/AFP1010 only, Version 4.0 and higher).
- must be mapped to an NFS2-3030 or NCA-2 annunciator address from 6 through 96.

If one or more of the four annunciator points are not selected for any toggle switch groups (unneeded), do not install the respective annunciator point address(es).

For AM2020/AFP1010/INA only: When using software type ID AFCM for a $CON_{ON/OP}$ or $CON_{OFF/CL}$ protocol point, the software type ID for the appropriate control module must be FRCM. When using the software type ID NOA for smoke control applications, the tracking option for the respective monitor module must be enabled.

When changing functions of a switch group, and subsequently the protocol points, make sure to install those points that were previously unneeded and remove those points that were previously needed.

When programming Control Modules for smoke control applications, the Walk Test option must be disabled and the Signal Silence option must be enabled.

NOTE:
1. Software Part Numbers 73631 and 73845 are not compatible with INA combinations after M2.7.
2. Part #SCSV2.84 is not compatible with FACP/INA combinations prior to M2.8.
3. NFS-320s, NFS2-640s, NFS-640s, NFS2-3030s, NFS-3030s, NCAs and NCA-2s are only compatible with software #SCS2.84 or higher. (They are not compatible with any 73XXX series software versions.)
4. To use the SCS V4.0, NFS2-3030, and/or NCA-2 must be running software V21 or higher.

4.5 Testing

Dedicated Systems require weekly automatic testing by the FACP.

Section 5: Ratings and Wiring Diagrams

5.1 Introduction

This section provides general information on the monitor modules and control modules which must be used in conjunction with the SCS/SCE. This section also provides examples of possible fan and damper control field applications for each of the listed smoke control functions and each of the HVAC functions. Each device has a figure depicting a Dedicated and a Non-dedicated example for the FSCS mode. Each figure for the FSCS mode is labeled with the toggle switch group type it represents and can be referenced to Table 3.6 and Table 3.7 on page 57. Each device also has a figure depicting an example for the HVAC mode. Each figure for the HVAC mode is labeled with the toggle switch group type it represents and can be referenced to Table 3.10 on page 62. The suggested applications for both the FSCS and HVAC mode utilize supervised relays controlled by control modules to activate fan motors or damper controllers.

The wiring diagrams in this section illustrate the use of monitor and control modules. These drawings are intended to help with smoke control system design, and are general in nature. Refer to the SLC Manual and the instruction sheets included with the modules for more specific information on how to wire them. The table below shows modules that can be substituted for the monitor or control modules where they appear in the diagrams.

Term	Code Used in Manual	Part Number
Control Module, Relay Module	CM	Control modules: FCM-1, XPC, XP5-C, XP6-C, CMX-1, CMX-2 Relay modules: FRM-1, XPR, XP6-R, CMX-1 relay configuration) CMX-2 (relay configuration)
Monitor Module	MM	FMM-1, FMM-101, FDM-1, XPM, XP5-M, XP6-MA, XP10-M, MMX-1, FZM-1
Note: the FDRM-1 acts as both CM or MM, depending on application.		

Table 5.1 Monitor and Control Module Substitutions

Refer to the SLC Manual for more specific information on these modules.

NOTE:
1. The end-of-line resistor used for an FZM-1 or MMX-2 is 3.9K ohms; the end-of-line resistor for an FMM-1, FMM-101, FDM-1, MMX-1, XP5-M, XP6-C, XP10-M, or MMX-101 is 47K ohms. The XPM uses a 10K ohm resistor, and the XPC and XP5-C use a 47K ohm resistor.
2. Refer to Section 5.2 “Air Flow Switches” and Section 5.3 “Dedicated Smoke Control System Wiring Diagrams” of this section for module-specific details that may be relevant to substitutions.
3. Refer to documentation that accompanies modules for specific information on wiring.

The listed contacts referenced in this section follow the format shown below:

1a	Form A Contacts (normally open contacts)
1b	Form B Contacts (normally closed contacts)

The acronym EMS is used for the term Energy Management System in the wiring diagrams of this section.

5.2 Air Flow Switches

Any air flow switch used in a smoke control or HVAC system only requires UL listing for HVAC applications. Air flow verification may be implemented either with an air flow switch or a pressure differential switch. The manufacturers listed below provide products that have been identified for use with the SCS/SCE. The manufacturers, part numbers and device types are as follows:

Manufacturer	Model	Type
Johnson Controls	F62AA	Air Flow
Dayton	2E462	Pressure Differential
Antunes Controls	SMV, SMD, SML, JPD-2	Pressure Differential

5.3 Dedicated Smoke Control System Wiring Diagrams

5.3.1 Fans

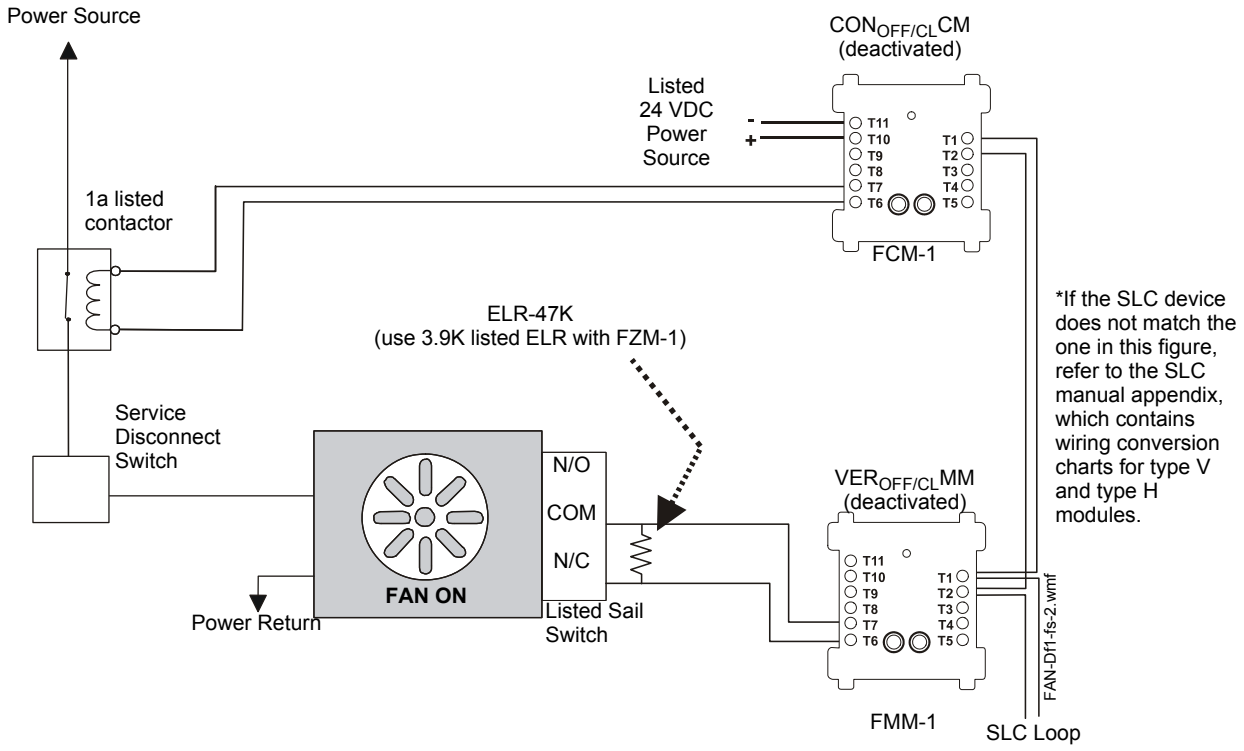

Figure 5.1 Fan Control, Dedicated System - FSCS Switch Group Type 1

Figure 5.1 depicts a fan in a dedicated system with the capability of OFF control and verification of the OFF state, switch group type 1. In the above configuration, the $CON_{OFF/CL}CM$ is deactivated. The $CON_{OFF/CL}CM$ controls a normally closed contact which switches power to the fan (the contact is used when the power being switched is greater than 24 volts). When the $CON_{OFF/CL}CM$ is deactivated, the contact is closed, thus supplying power to the fan. When power is supplied to the fan, the fan is ON and the sail switch is OPEN, indicating airflow in the duct. The $VER_{OFF/CL}MM$ monitors the CLOSED position of the sail switch, which would indicate when the fan is OFF. In this case the $VER_{OFF/CL}MM$ is deactivated because the fan is ON and the sail switch is OPEN.

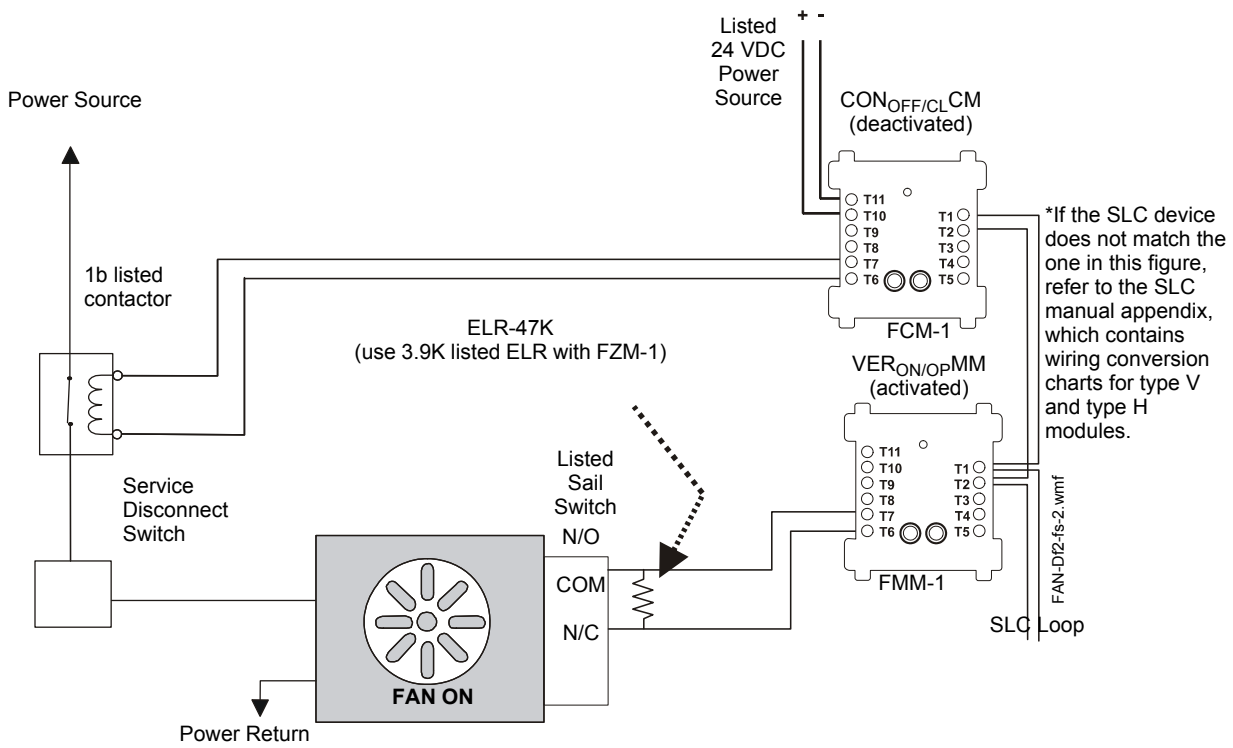

Figure 5.2 Fan Control, Dedicated System - FSCS Switch Group Type 2

Figure 5.2 depicts a fan in a dedicated system with the capability of OFF control and verification of the ON state, switch group type 2. In the above configuration, the $CON_{OFF/CL}CM$ is deactivated. The $CON_{OFF/CL}CM$ controls a normally closed contact which switches power to the fan (the contact is used when the power being switched is greater than 24 volts). When the $CON_{OFF/CL}CM$ is deactivated, the contact is closed, thus supplying power to the fan. When power is supplied to the fan, the fan is ON and the sail switch is OPEN, indicating airflow in the duct. The $VER_{ON/OP}MM$ monitors the OPEN position of the sail switch, which would indicate when the fan is ON. In this case the $VER_{ON/OP}MM$ is activated because the fan is ON and the sail switch is OPEN.

Switch group type 3 is for a fan that would require the capability of OFF control and verification of both the ON and OFF states. Since it is possible to determine this information from either switch group type 1 or switch group type 2, switch group type 3 would only be necessary for redundancy in verifying the state of the fan. For example, if switch group type 1 is used instead of switch group type 3, the OFF state of the fan would be verified when the monitor module is activated and the ON state of the fan would be verified when the monitor module is deactivated. Utilizing switch group types 1 or 2 also saves the use of an additional monitor module. Switch group type 3 would use two monitor modules to provide the same verification as types 1 or 2.

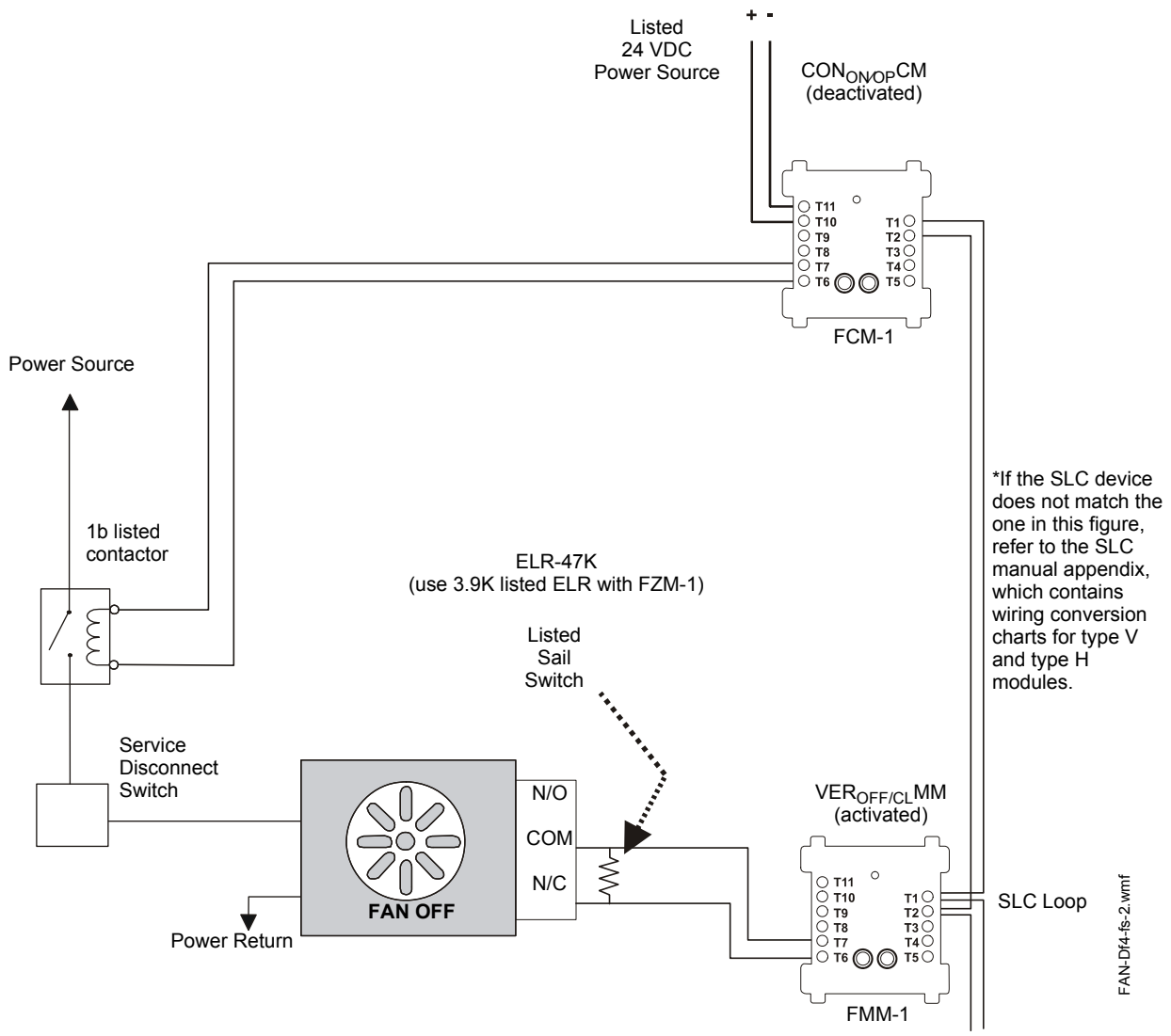

Figure 5.3 Fan Control, Dedicated System - FSCS Switch Group Type 4

Figure 5.3 depicts a fan in a dedicated system with the capability of ON control and verification of the OFF state, switch group type 4. In the above configuration, the CON$_{ON/OP}$CM is deactivated. The CON$_{ON/OP}$CM controls a normally open contact which switches power to the fan (the contact is used when the power being switched is greater than 24 volts). When the CON$_{ON/OP}$CM is deactivated, the contact is open, thus cutting power to the fan. When power is cut to the fan, the fan is OFF and the sail switch is CLOSED, indicating no airflow in the duct. The VER$_{OFF/CL}$MM monitors the CLOSED position of the sail switch, which would indicate when the fan is OFF. In this case the VER$_{OFF/CL}$MM is activated because the fan is OFF and the sail switch is CLOSED.

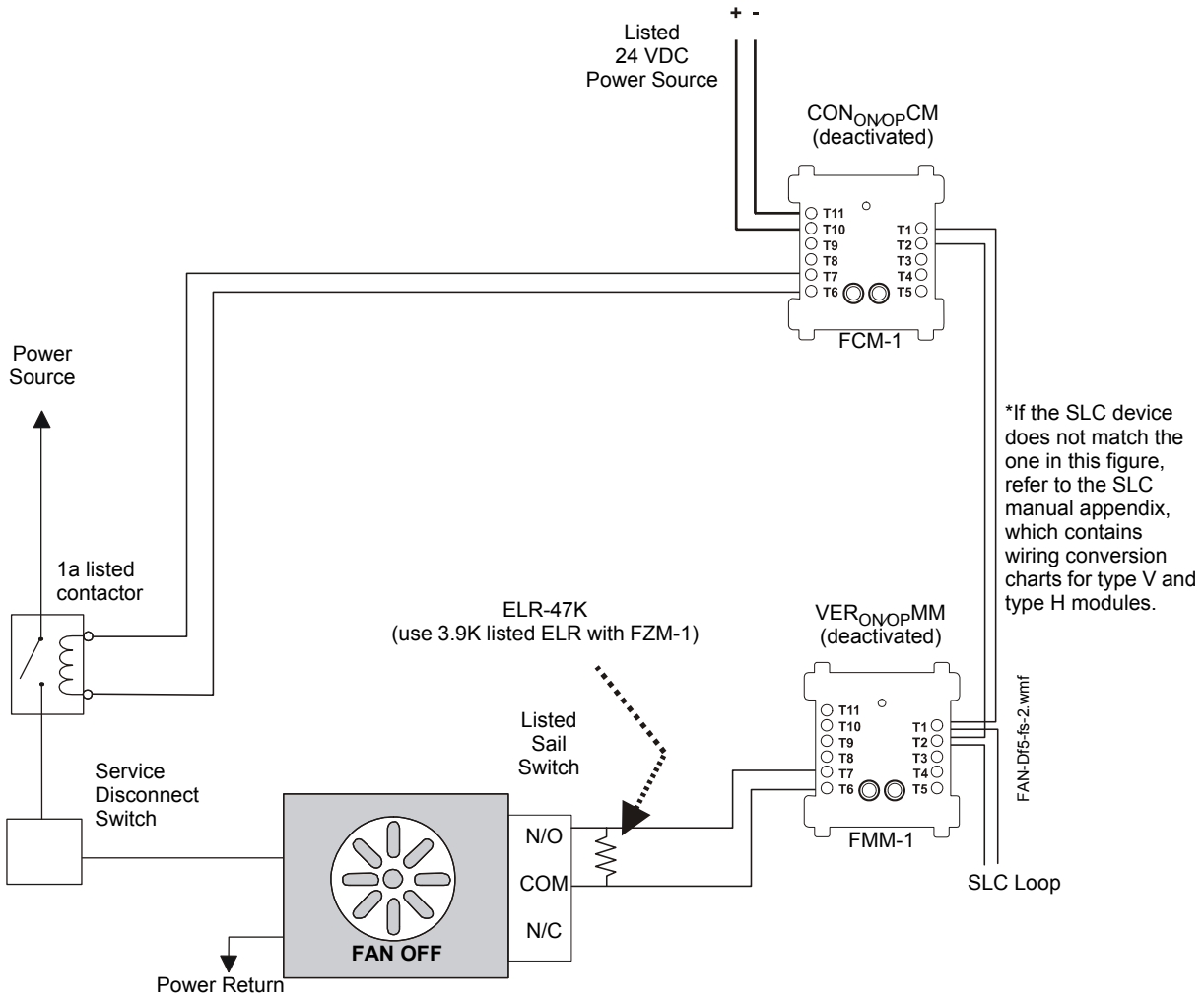

Figure 5.4 Fan Control, Dedicated System - FSCS Switch Group Type 5

Figure 5.4 depicts a fan in a dedicated system with the capability of ON control and verification of the ON state, switch group type 5. In the above configuration, the $CON_{ON/OP}CM$ is deactivated. The $CON_{ON/OP}CM$ controls a normally open contact which switches power to the fan (the contact is used when the power being switched is greater than 24 volts). When the $CON_{ON/OP}CM$ is deactivated, the contact is open, thus cutting power to the fan. When power is cut to the fan, the fan is OFF and the sail switch is CLOSED, indicating no airflow in the duct. The $VER_{ON/OP}MM$ monitors the OPEN position of the sail switch, which would indicate when the fan is ON. In this case the $VER_{ON/OP}MM$ is deactivated because the fan is OFF and the sail switch is CLOSED.

Switch group type 6 is for a fan that would require the capability of ON control and verification of both the ON and OFF states. Since it is possible to determine this information from either switch group type 4 or switch group type 5, switch group type 6 would only be necessary for redundancy in verifying the state of the fan. For example, if switch group type 4 is used instead of switch group type 6, the OFF state of the fan would be verified when the monitor module is activated and the ON state of the fan would be verified when the monitor module is deactivated. Utilizing switch group types 4 or 5 also saves the use of an additional monitor module. Switch group type 6 would use two monitor modules to provide the same verification as types 4 or 5.

The use of switch group type 7 would never be necessary in a dedicated system unless there were a need for redundancy in OFF and ON control. Type 7 is used for ON and OFF control and verification of the OFF state. When the $CON_{ON/OP}CM$ is deactivated, the $CON_{OFF/CL}CM$ is activated, and vice versa. The $CON_{ON/OP}CM$ controls a normally open contact which switches power to the fan. The $CON_{OFF/CL}CM$ controls a normally closed contact which switches power to the fan. When the $CON_{ON/OP}CM$ is deactivated, the contact is open, thus cutting power to the fan. When the $CON_{OFF/CL}CM$ is activated, the contact is open, thus cutting power to the fan. Both control modules are not necessary to cut the power to the fan: one is sufficient. When power is cut to the fan, the fan is OFF and the sail switch is CLOSED, indicating no airflow in the duct. The $VER_{ON/OP}MM$ monitors the OPEN position of the sail switch, which would indicate when the fan is ON. In this case the $VER_{ON/OP}MM$ is deactivated because the fan is OFF and the sail switch is CLOSED.

The use of switch group type 8 would never be necessary in a dedicated system unless there were a need for redundancy in OFF and ON control. Type 8 is used for ON and OFF control and verification of the ON state. When the $CON_{ON/OP}CM$ is deactivated, the $CON_{OFF/CL}CM$ is activated, and vice versa. The $CON_{ON/OP}CM$ controls a normally open contact which switches power to the fan. The $CON_{OFF/CL}CM$ controls a normally closed contact which switches power to the fan. When the $CON_{ON/OP}CM$ is deactivated, the contact is open, thus cutting power to the fan. When the $CON_{OFF/CL}CM$ is activated, the contact is open, thus cutting power to the fan. Both control modules are not necessary to cut the power to the fan: one is sufficient. When power is cut to the fan, the fan is OFF and the sail switch is CLOSED, indicating no airflow in the duct. The $VER_{ON/OP}MM$ monitors the OPEN position of the sail switch, which would indicate when the fan is ON. In this case the $VER_{ON/OP}MM$ is deactivated because the fan is OFF and the sail switch is CLOSED.

The use of switch group type 9 would never be necessary in a dedicated system unless there were a need for redundancy in OFF and ON control. Type 8 is used for ON and OFF control and verification of the ON and OFF state. When the $CON_{ON/OP}CM$ is deactivated, the $CON_{OFF/CL}CM$ is activated, and vice versa. The $CON_{ON/OP}CM$ controls a normally open contact that switches power to the fan. The $CON_{OFF/CL}CM$ controls a normally closed contact that switches power to the fan. When the $CON_{ON/OP}CM$ is deactivated, the contact is open, thus cutting power to the fan. When the $CON_{OFF/CL}CM$ is activated, the contact is open, thus cutting power to the fan. Both control modules are not necessary to cut the power to the fan: one is sufficient. When power is cut to the fan, the fan is OFF and the sail switch is CLOSED, indicating no airflow in the duct. Since it is possible to determine both ON and OFF verification from switch group type 7 or switch group type 8, switch group type 9 would only be necessary for redundancy in verifying the state of the fan. For example, if switch group type 7 is used instead of switch group type 8, the OFF state of the fan would be verified when the monitor module is activated and the ON state of the fan would be verified when the monitor module is deactivated. Utilizing switch group types 7 or 8 also saves the use of an additional monitor module. Switch group type 9 would use two monitor modules to provide the same verification as types 7 or 8.

5.3.2 Motorized Dampers

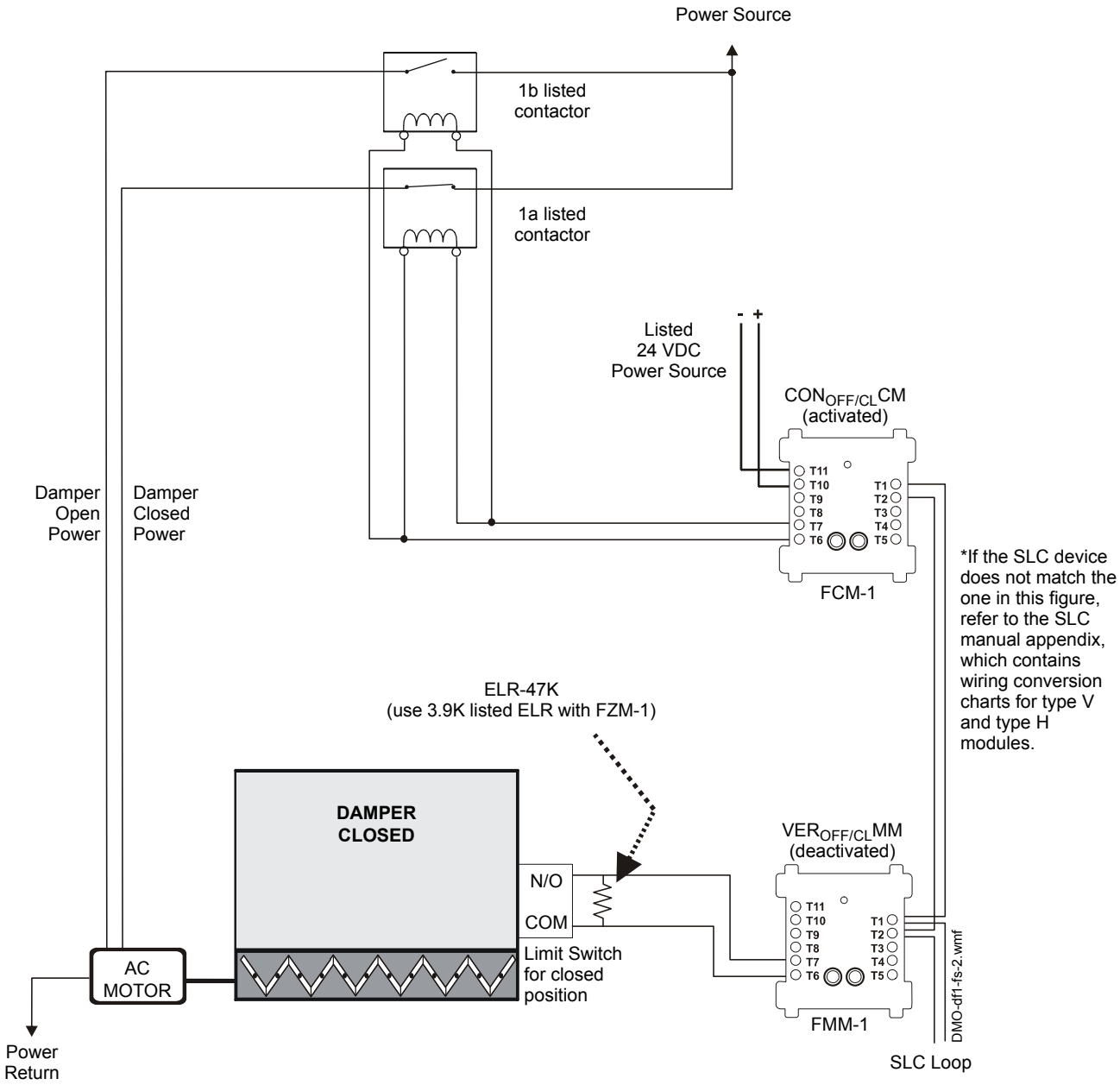

Figure 5.5 Motorized Damper Control
Dedicated System - FSCS Switch Group Type 1

Figure 5.5 depicts a motorized damper in a dedicated system with the capability of CLOSED control and verification of the CLOSED state, switch group type 1. In the above configuration, the $CON_{OFF/CL}CM$ is activated. The $CON_{OFF/CL}CM$ controls a normally closed contact for the damper open power line and a normally open contact for the damper close power. When the $CON_{OFF/CL}CM$ is activated, the normally closed contact is opened and the normally open contact is closed, thus supplying power to close the damper. When the damper completely closes, the damper closed limit switch is CLOSED, indicating that the damper is in the CLOSED position. The $VER_{OFF/CL}MM$ monitors the CLOSED position of the damper closed limit switch. In this case the $VER_{OFF/CL}MM$ is activated because the damper is CLOSED.

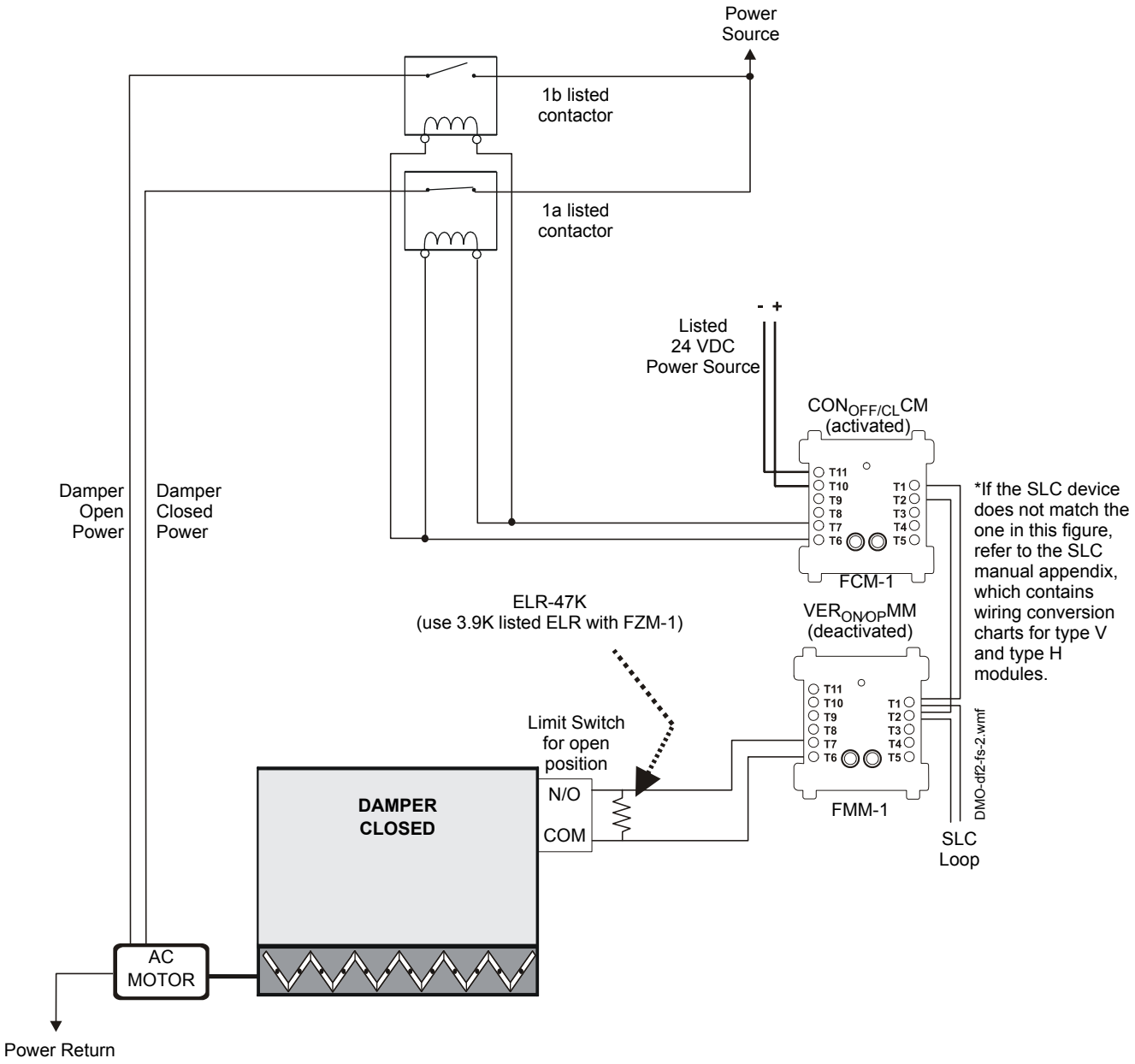

Figure 5.6 Motorized Damper Control
Dedicated System - FSCS Switch Group Type 2

Figure 5.6 depicts a motorized damper in a dedicated system with the capability of CLOSED control and verification of the OPEN state, switch group type 2. In the above configuration, the $CON_{OFF/CL}CM$ is activated. The $CON_{OFF/CL}CM$ controls a normally closed contact for the damper open power line and a normally open contact for the damper close power. When the $CON_{OFF/CL}CM$ is activated, the normally closed contact is opened and the normally open contactor is closed, thus supplying power to close the damper. When the damper completely closes, the damper closed limit switch is CLOSED, indicating that the damper is in the CLOSED position, and the damper open limit switch is OPEN. The $VER_{ON/OP}MM$ monitors the CLOSED position of the damper open limit switch. In this case the $VER_{ON/OP}MM$ is deactivated because the damper is CLOSED.

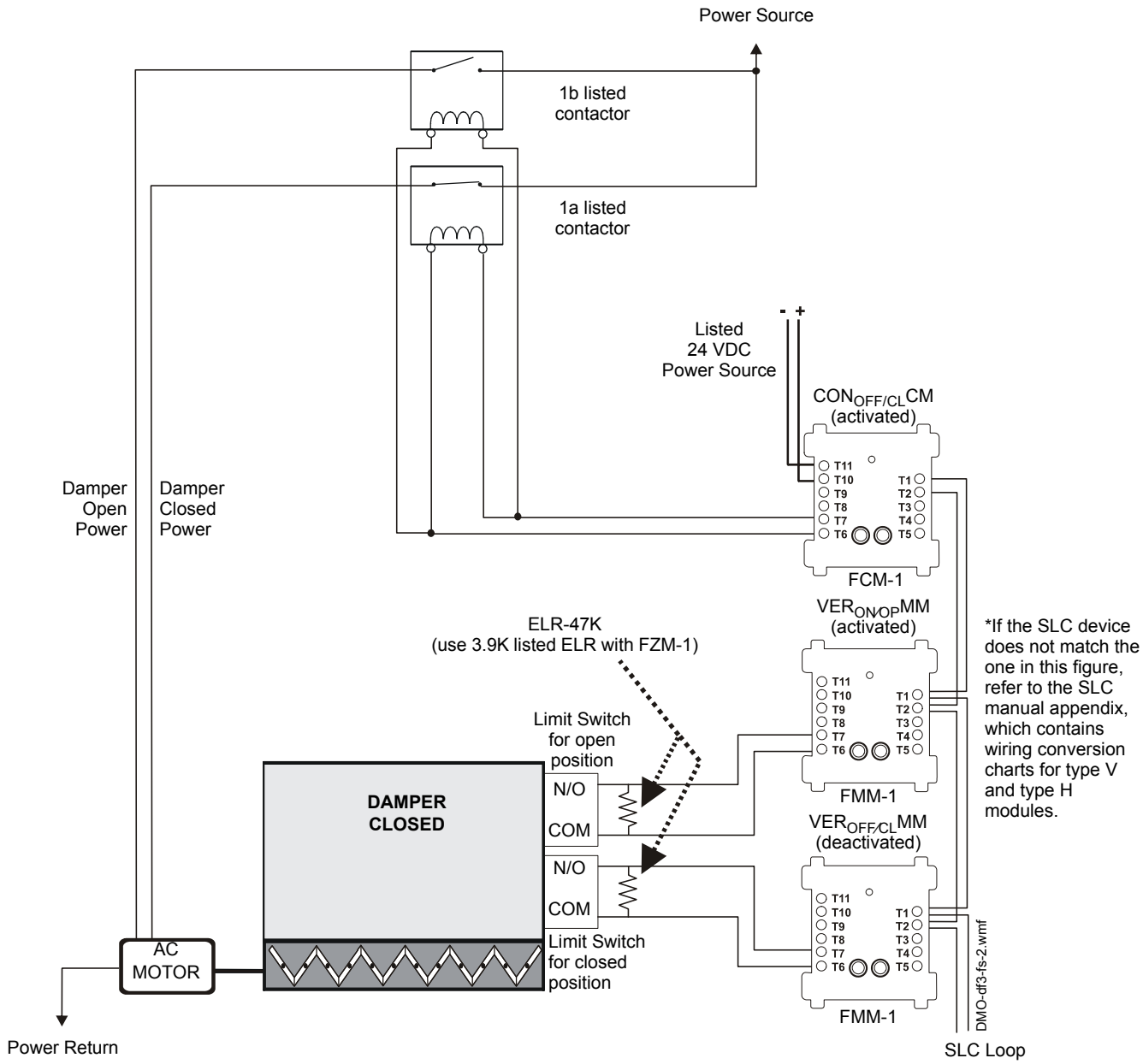

Figure 5.7 Motorized Damper Control
Dedicated System - FSCS Switch Group Type3

Figure 5.7 depicts a motorized damper in a dedicated system with the capability of CLOSED control and verification of the OPEN and CLOSED state, switch group type 3. In the above configuration, the $CON_{OFF/CL}CM$ is activated. The $CON_{OFF/CL}CM$ controls a normally closed contactor for the damper open power line and a normally open contactor for the damper close power. When the $CON_{OFF/CL}CM$ is activated, the normally closed contactor is opened and the normally open contactor is closed, thus supplying power to close the damper. When the damper completely closes, the damper closed limit switch is closed, indicating that the damper is in the CLOSED position. (When the damper is in the open position, the damper open limit switch is closed.) The $VER_{OFF/CL}MM$ monitors when the damper closed limit switch is CLOSED. In this case the $VER_{OFF/CL}MM$ is activated and the $VER_{ON/OP}MM$ is deactivated because the damper is CLOSED.

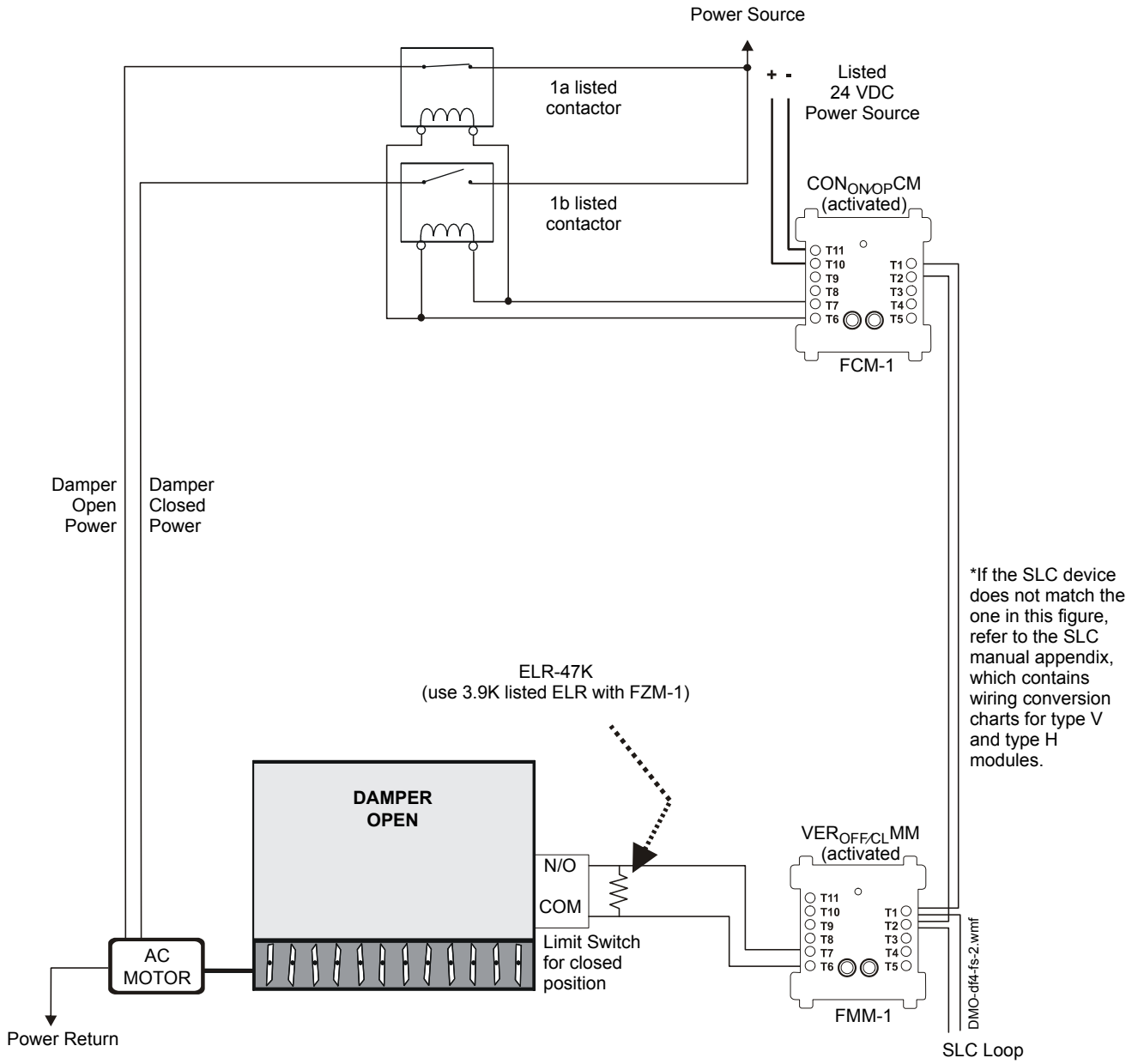

Figure 5.8 Motorized Damper Control
Dedicated System - FSCS Switch Group Type 4

Figure 5.8 depicts a motorized damper in a dedicated system with the capability of OPEN control and verification of the CLOSED state, switch group type 4. In the above configuration, the $CON_{ON/OP}CM$ is activated. The $CON_{ON/OP}CM$ controls a normally open contactor for the damper open power line and a normally closed contactor for the damper close power line. When the $CON_{ON/OP}CM$ is activated, the normally closed contactor is opened and the normally open contactor is closed, thus supplying power to open the damper. When the damper completely opens, the damper open limit switch is CLOSED, indicating that the damper is in the OPEN position, and the damper closed limit switch is OPEN. The $VER_{OFF/CL}MM$ monitors the CLOSED position of the damper closed limit switch. In this case the $VER_{OFF/CL}MM$ is deactivated because the damper is CLOSED.

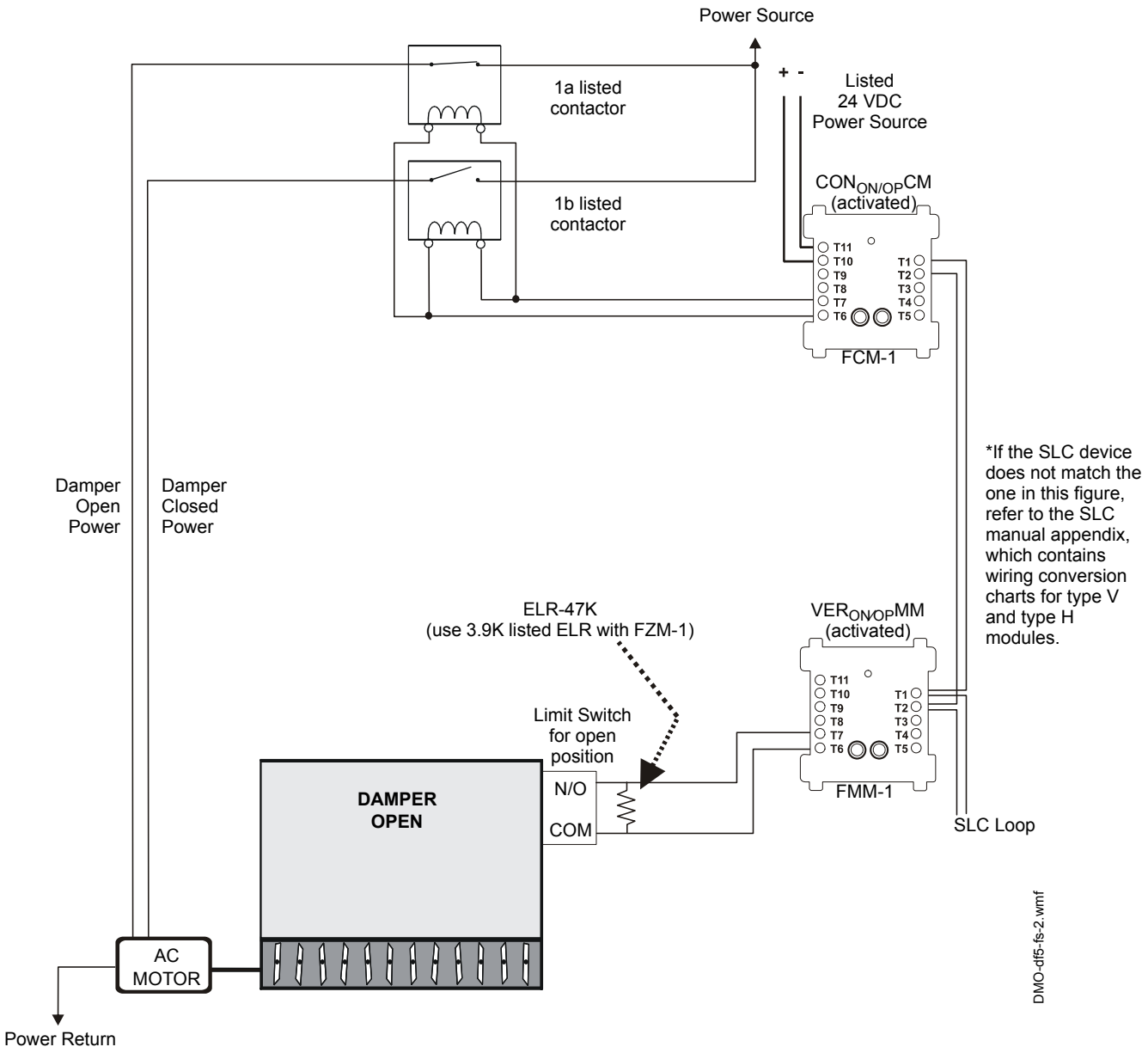

Figure 5.9 Motorized Damper Control
Dedicated System - FSCS Switch Group Type 5

Figure 5.9 depicts a motorized damper in a dedicated system with the capability of OPEN control and verification of the OPEN state, switch group type 5. In the above configuration, the $CON_{ON/OP}CM$ is activated. The $CON_{ON/OP}CM$ controls a normally open contactor for the damper open power line and a normally closed contactor for the damper close power. When the $CON_{ON/OP}CM$ is activated, the normally closed contactor is opened and the normally open contactor is closed, thus supplying power to open the damper. When the damper completely opens, the damper open limit switch is CLOSED, indicating that the damper is in the OPEN position. The $VER_{ON/OP}MM$ monitors the CLOSED position of the open position limit switch. In this case the $VER_{ON/OP}MM$ is activated because the damper is OPEN.

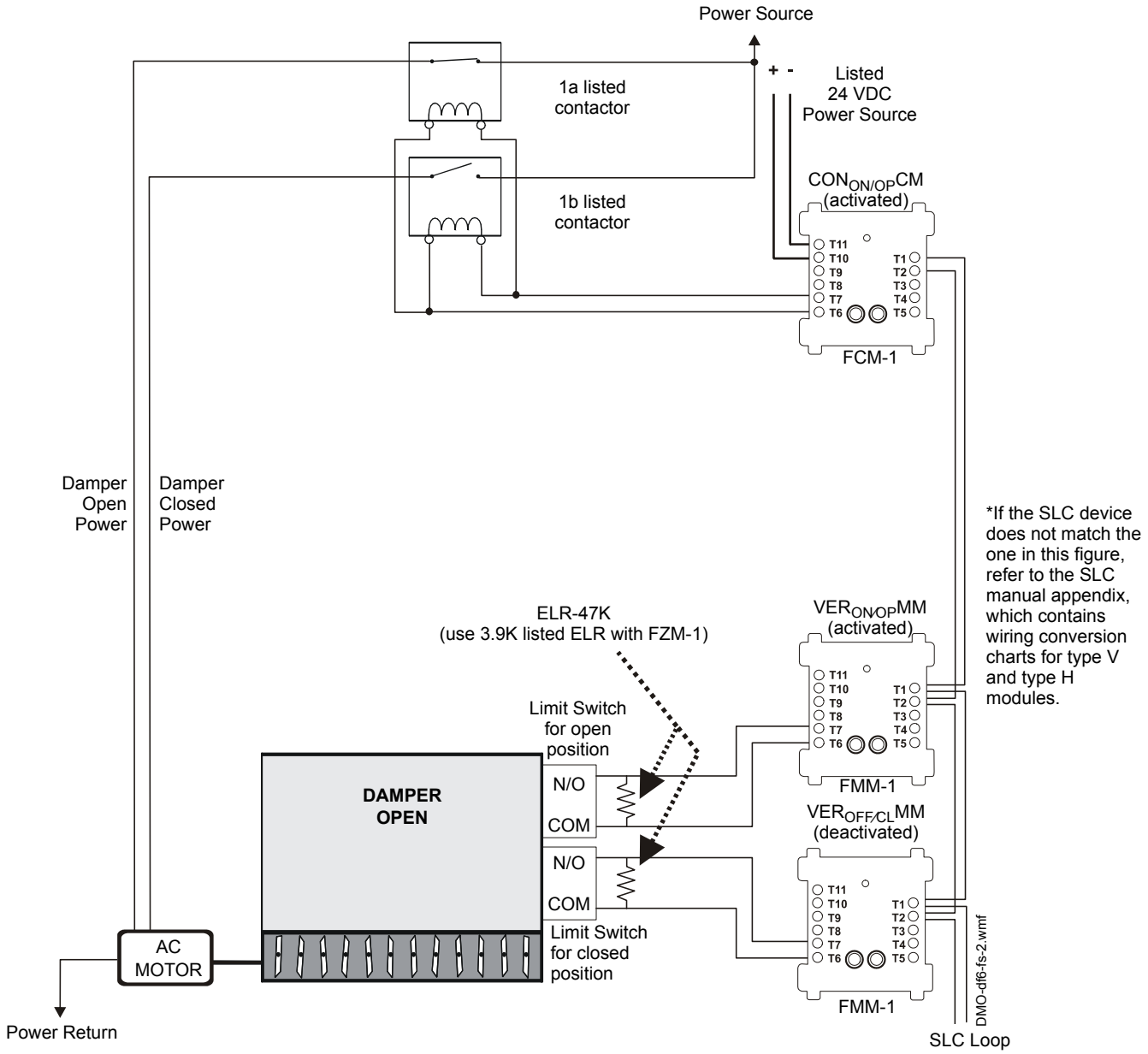

Figure 5.10 Motorized Damper Control
Dedicated System - FSCS Switch Group Type 6

Figure 5.10 depicts a motorized damper in a dedicated system with the capability of OPEN control and verification of the OPEN and CLOSED state, switch group type 6. In the above configuration, the $CON_{ON/OP}CM$ is activated. The $CON_{ON/OP}CM$ controls a normally open contactor for the damper open power line and a normally closed contactor for the damper close power. When the $CON_{ON/OP}CM$ is activated, the normally closed contactor is opened and the normally open contactor is closed, thus supplying power to open the damper. When the damper completely opens, the open position limit switch is closed, indicating that the damper is in the OPEN position. (When the damper is in the closed position, the closed position limit switch is CLOSED.) The $VER_{ON/OP}MM$ monitors when the open position limit switch is CLOSED. In this case the $VER_{ON/OP}MM$ is activated and the $VER_{OFF/CL}MM$ is deactivated because the damper is OPEN.

In a dedicated system, a damper would never need both ON and OFF control. A damper for a dedicated system is either normally open and would need to be closed or normally closed and would need to be opened. This is not true for a Non-dedicated system.

Switch group type 7 would never be needed unless redundancy in OFF and ON control were necessary. Type 7 is used for ON and OFF control and verification of the OFF state. When the $CON_{ON/OP}CM$ is deactivated, the $CON_{OFF/CL}CM$ is activated, and vice versa. The $CON_{ON/OP}CM$ controls a normally open contactor which switches the damper open power to the damper. The $CON_{OFF/CL}CM$ controls a normally open contactor which switches damper close power to the damper. When the $CON_{ON/OP}CM$ is deactivated, the contactor is open, thus cutting damper open power to the damper. When the $CON_{OFF/CL}CM$ is activated, the contactor is closed, thus supplying power to the fan. The same capability could be obtained by connecting one normally open contactor and one normally closed contactor

to the output of one control module. For instance, if you are using one $CON_{OFF/CL}CM$, connect the normally open contactor to the damper closed power and connect the normally closed contactor to the damper open power. Both control modules are not necessary to switch the power to the damper: one is sufficient for a dedicated system as long as two contactors are used.

Switch group type 8 would never be needed unless redundancy in OFF and ON control were necessary. Type 8 is used for ON and OFF control and verification of the ON state. When the $CON_{ON/OP}CM$ is deactivated, the

$CON_{OFF/CL}CM$ is activated, and vice versa. The $CON_{ON/OP}CM$ controls a normally open contactor which switches the damper open power to the damper. The $CON_{OFF/CL}CM$ controls a normally open contactor which switches damper close power to the damper. When the $CON_{ON/OP}CM$ is deactivated, the contactor is open, thus, cutting damper open power to the damper. When the $CON_{OFF/CL}CM$ is activated, the contactor is closed, thus supplying power to the fan. The same capability could be obtained by connecting one normally open contactor and one normally closed contactor to the output of one control module. For instance, if you are using one $CON_{OFF/CL}CM$, connect the normally open contactor to the damper closed power and connect the normally closed contactor to the damper open power. Both control modules are not necessary to switch the power to the damper: one is sufficient for a dedicated system as long as two contactors are used.

Switch group type 9 would never be needed unless redundancy in OFF and ON control were necessary. Type 9 is used for ON and OFF control and verification of the ON and OFF state. When the $CON_{ON/OP}CM$ is deactivated, the $CON_{OFF/CL}CM$ is activated, and vice versa. The $CON_{ON/OP}CM$ controls a normally open contactor which switches the damper open power to the damper. The $CON_{OFF/CL}CM$ controls a normally open contactor which switches damper close power to the damper. When the $CON_{ON/OP}CM$ is deactivated, the contactor is open, thus cutting damper open power to the damper. When the $CON_{OFF/CL}CM$ is activated, the contactor is closed, thus supplying power to the fan. The same capability could be obtained by connecting one normally open contactor and one normally closed contactor to the output of one control module. For instance, if you are using one

$CON_{OFF/CL}CM$, connect the normally open contactor to the damper closed power and connect the normally closed contactor to the damper open power. Both control modules are not necessary to switch the power to the damper: one is sufficient for a dedicated system as long as two contactors are used.

5.3.3 EP Dampers

The Electrical to Pressure (EP) damper uses airflow to operate the opening and closing of the damper. It operates such that when power is applied to the pressure switch, airflow going to the damper is cut off and the damper closes. When no power is supplied to the pressure switch, airflow is continuous and keeps the damper open.

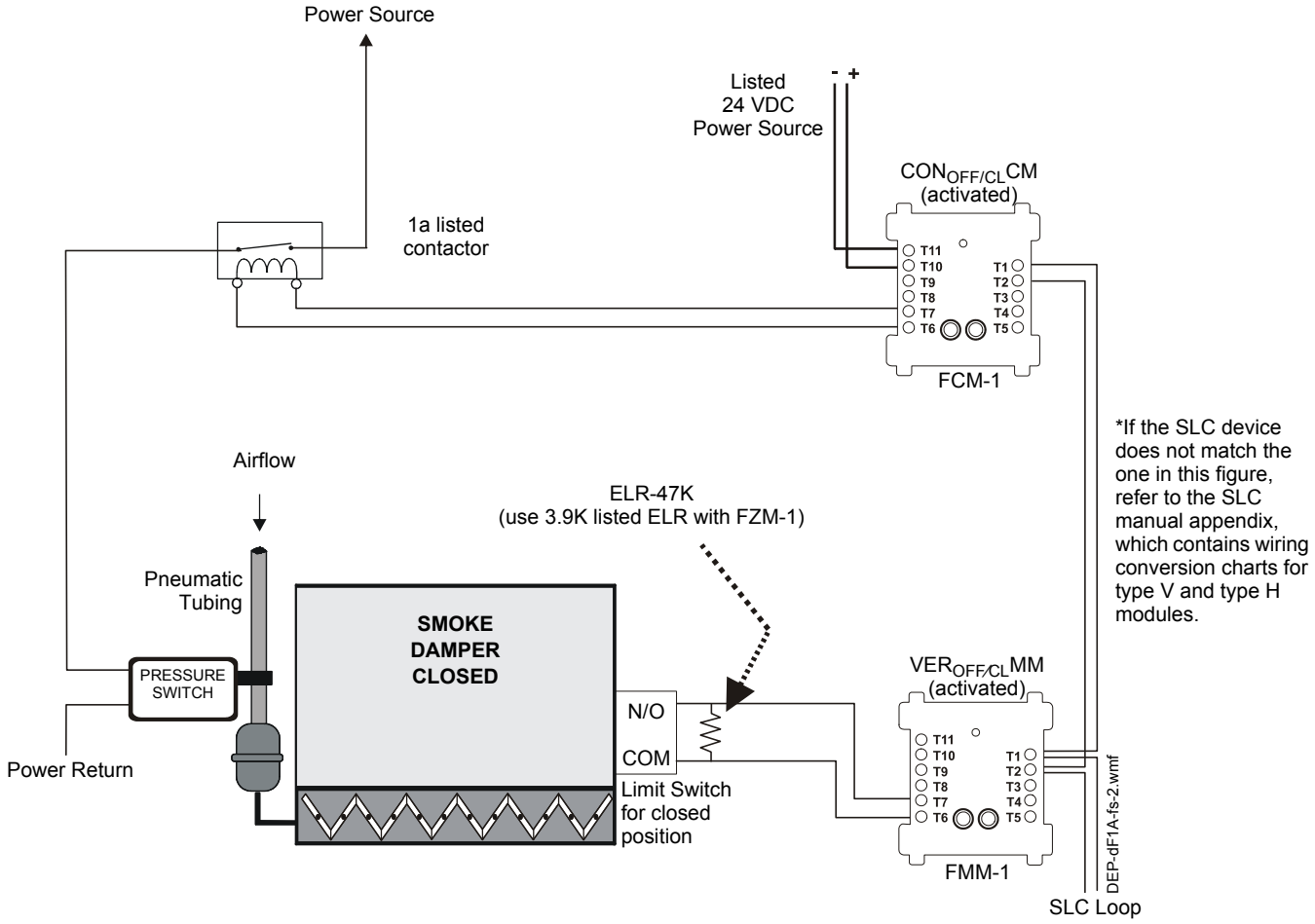

Figure 5.11 EP Damper Control, Dedicated System - FSCS Switch Group Type 1

Figure 5.11 depicts an EP damper in a dedicated system with the capability of CLOSED control and verification of the CLOSED state, switch group type 1. In the above configuration, the $CON_{OFF/CL}CM$ is activated. The $CON_{OFF/CL}CM$ controls a normally open contactor for the pressure switch power. When the $CON_{OFF/CL}CM$ is activated, the normally open contactor is closed, thus supplying power to close the damper. When the damper completely closes, the damper closed limit switch is CLOSED, indicating that the damper is in the CLOSED position. The $VER_{OFF/CL}MM$ monitors the CLOSED position of the damper closed limit switch. In this case the $VER_{OFF/CL}MM$ is activated because the damper is CLOSED.

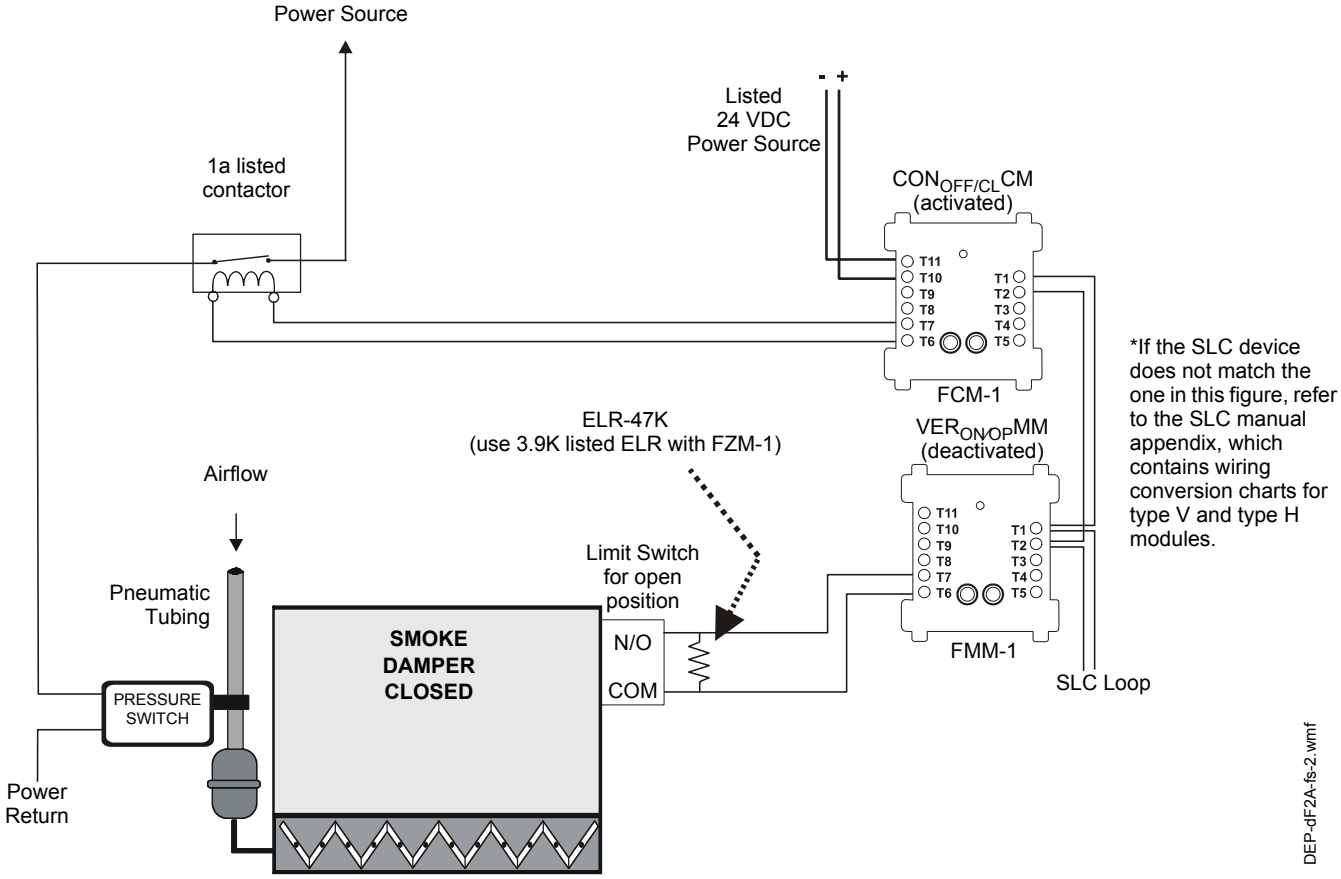

Figure 5.12 EP Damper Control, Dedicated System - FSCS Switch Group Type 2

Figure 5.12 depicts an EP damper in a dedicated system with the capability of CLOSED control and verification of the OPEN state, switch group type 2. In the above configuration, the $CON_{OFF/CL}CM$ is activated. The $CON_{OFF/CL}CM$ controls a normally open contactor for the pressure switch power. When the $CON_{OFF/CL}CM$ is activated, the normally open contactor is closed, thus supplying power to close the damper. When the damper completely closes, the damper closed limit switch is CLOSED, indicating that the damper is in the CLOSED position, and the damper open limit switch is OPEN. The $VER_{ON/OP}MM$ monitors the CLOSED position of the damper open limit switch. In this case the $VER_{ON/OP}MM$ is deactivated because the damper is CLOSED.

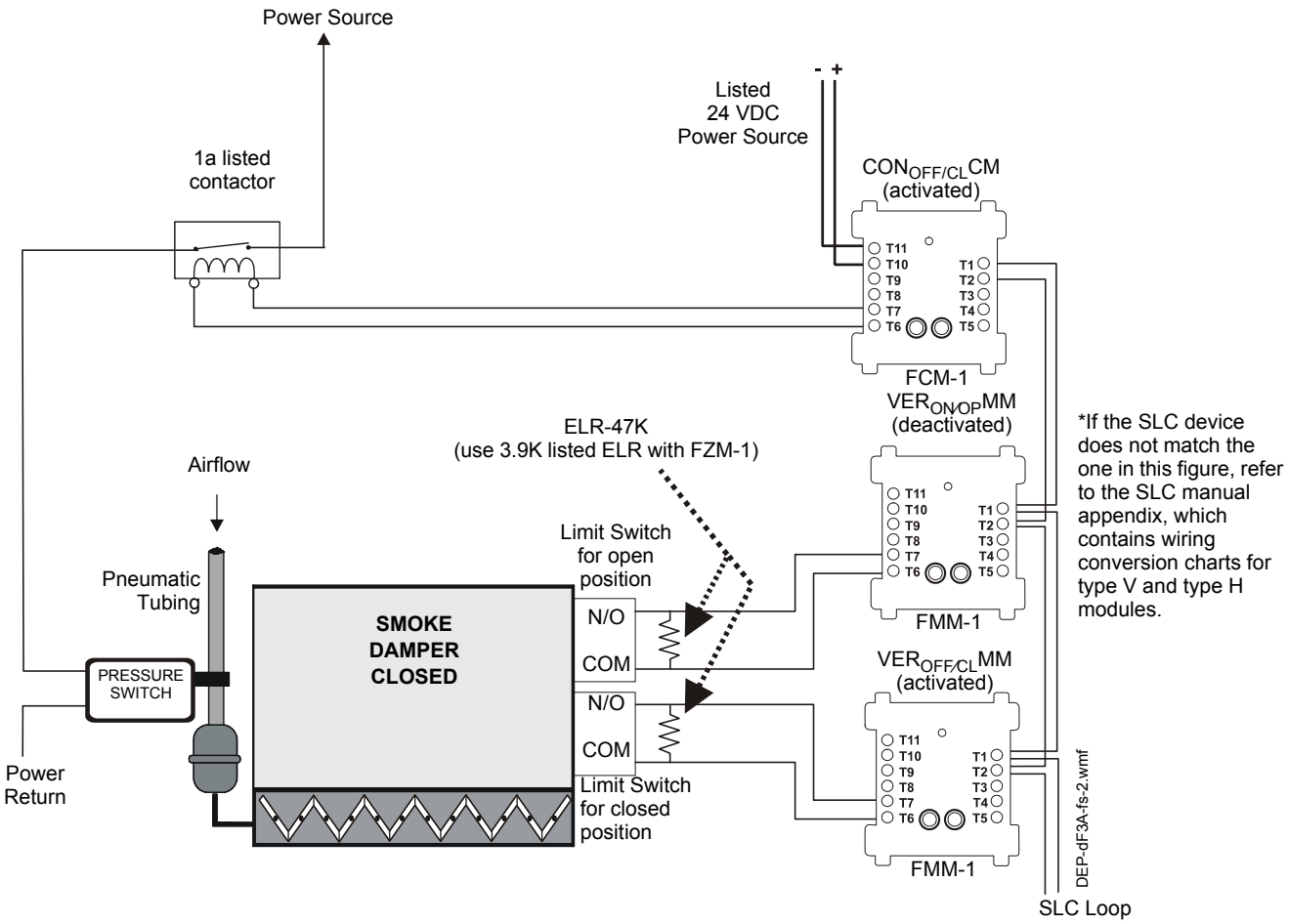

Figure 5.13 EP Damper Control, Dedicated System - FSCS Switch Group Type 3

Figure 5.13 depicts an EP damper in a dedicated system with the capability of control and verification of the OPEN and CLOSED state, switch group type 3. In the above configuration, the $CON_{OFF/CL}CM$ is activated. The $CON_{OFF/CL}CM$ controls a normally open contactor for the pressure switch power. When the $CON_{OFF/CL}CM$ is activated, the normally open contactor is closed, thus supplying power to close the damper. When the damper completely closes, the damper closed limit switch is closed, indicating that the damper is in the CLOSED position. (When the damper is in the open position, the damper open limit switch is closed.) The $VER_{OFF/CL}MM$ monitors when the damper closed limit switch is CLOSED. In this case the $VER_{OFF/CL}MM$ is activated and the $VER_{ON/OP}MM$ is deactivated because the damper is CLOSED.

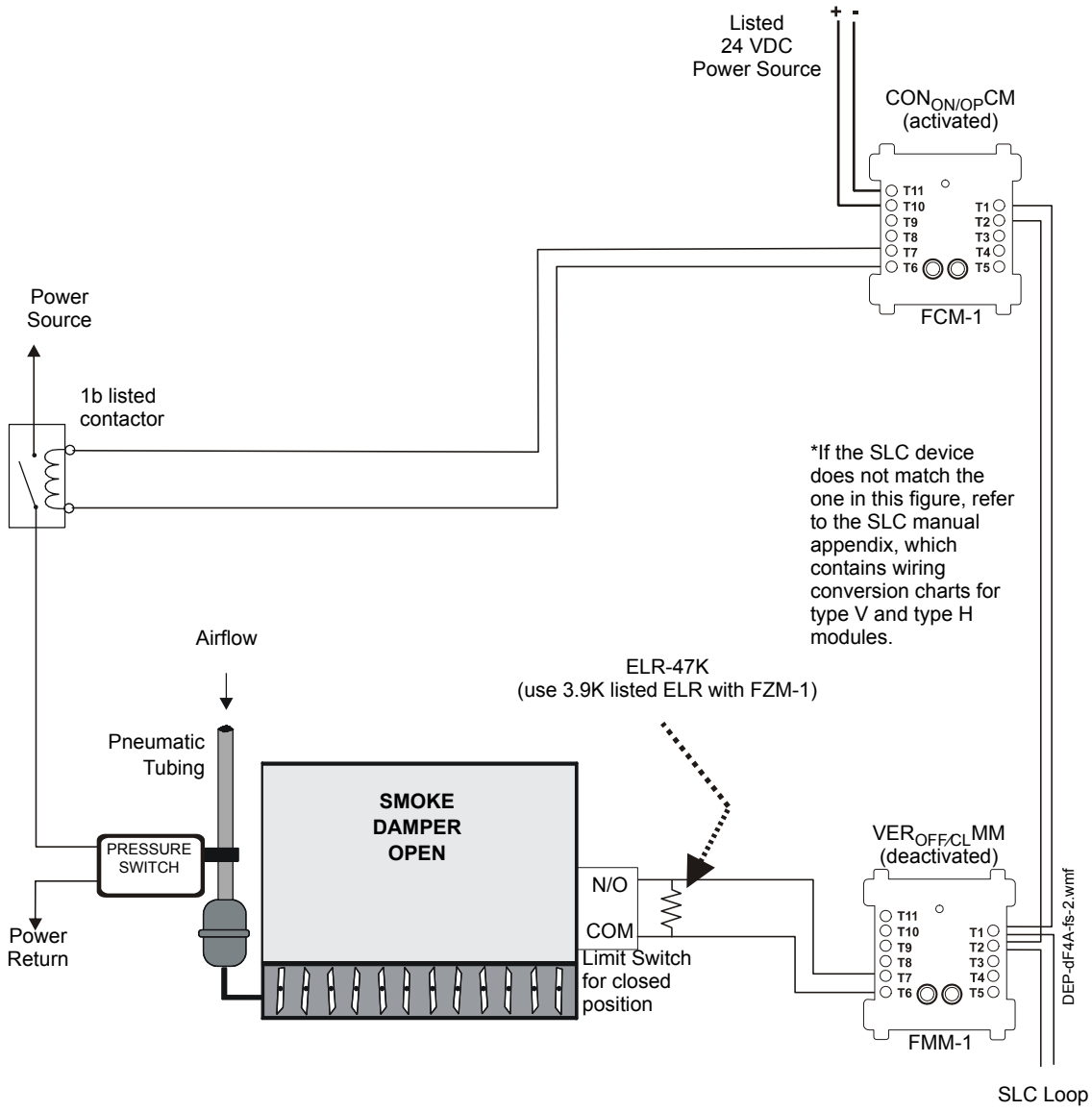

Figure 5.14 EP Damper Control, Dedicated System - FSCS Switch Group Type 4

Figure 5.14 depicts an EP damper in a dedicated system with the capability of OPEN control and verification of the CLOSED state, switch group type 4. In the above configuration, the $CON_{ON/OP}CM$ is activated. The $CON_{ON/OP}CM$ controls a normally closed contactor for the pressure switch power. When the $CON_{ON/OP}CM$ is activated, the normally closed contactor is opened, thus cutting power from the pressure switch and causing the damper to open. When the damper completely opens, the damper open limit switch is CLOSED, indicating that the damper is in the OPEN position, and the damper closed limit switch is OPEN. The $VER_{OFF/CL}MM$ monitors the CLOSED position of the damper closed limit switch. In this case the $VER_{OFF/CL}MM$ is deactivated because the damper is CLOSED.

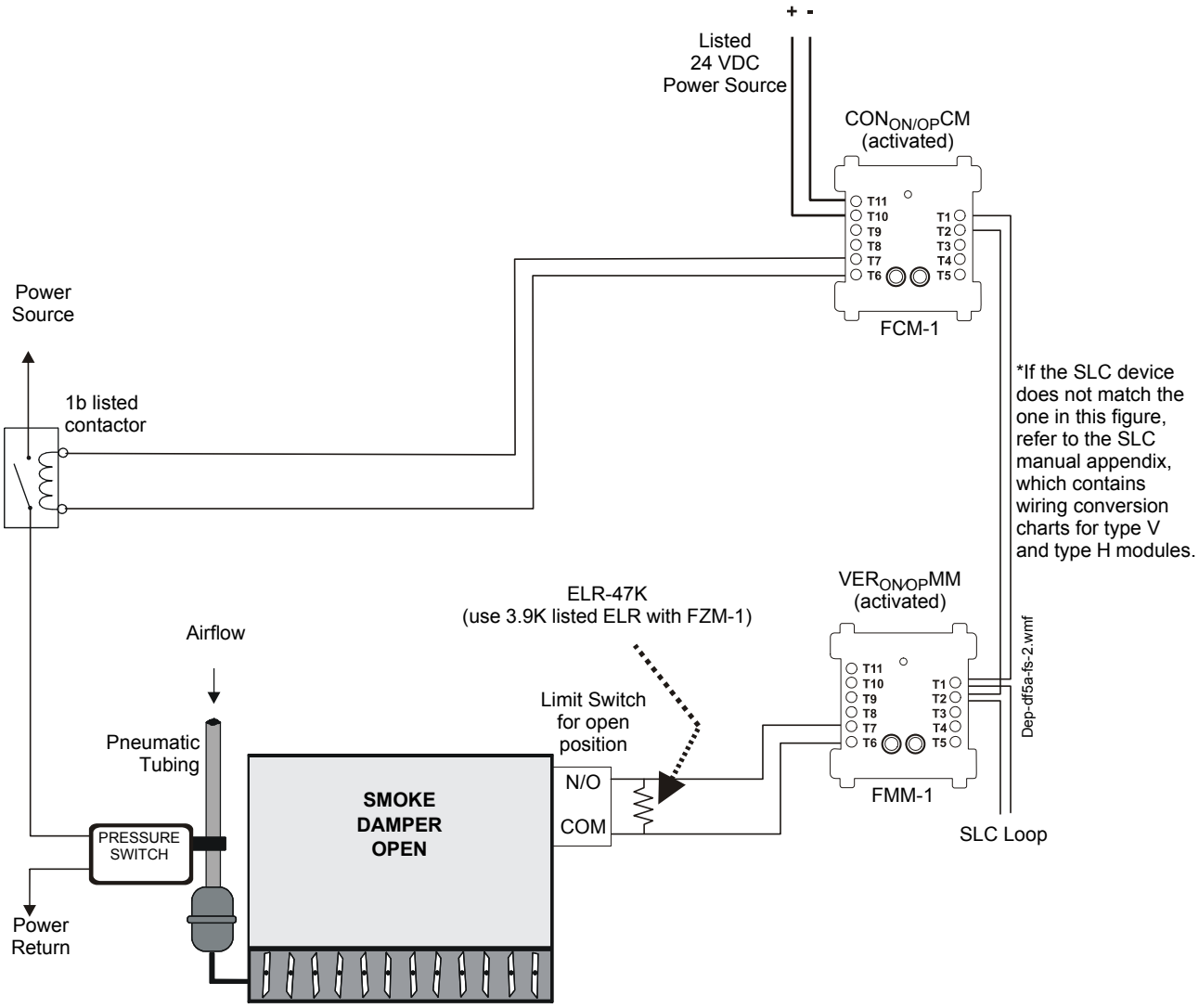

Figure 5.15 EP Damper Control, Dedicated System - FSCS Switch Group Type 5

Figure 5.15 depicts an EP damper in a dedicated system with the capability of OPEN control and verification of the OPEN state, switch group type 5. In the above configuration, the $CON_{ON/OP}CM$ is activated. The $CON_{ON/OP}CM$ controls a normally closed contactor for the pressure switch power. When the $CON_{ON/OP}CM$ is activated, the normally closed contactor is opened, thus cutting power from the pressure switch and causing the damper to open. When the damper completely opens, the damper open limit switch is CLOSED, indicating that the damper is in the OPEN position. The $VER_{ON/OP}MM$ monitors the CLOSED position of the open position limit switch. In this case the $VER_{ON/OP}MM$ is activated because the damper is OPEN.

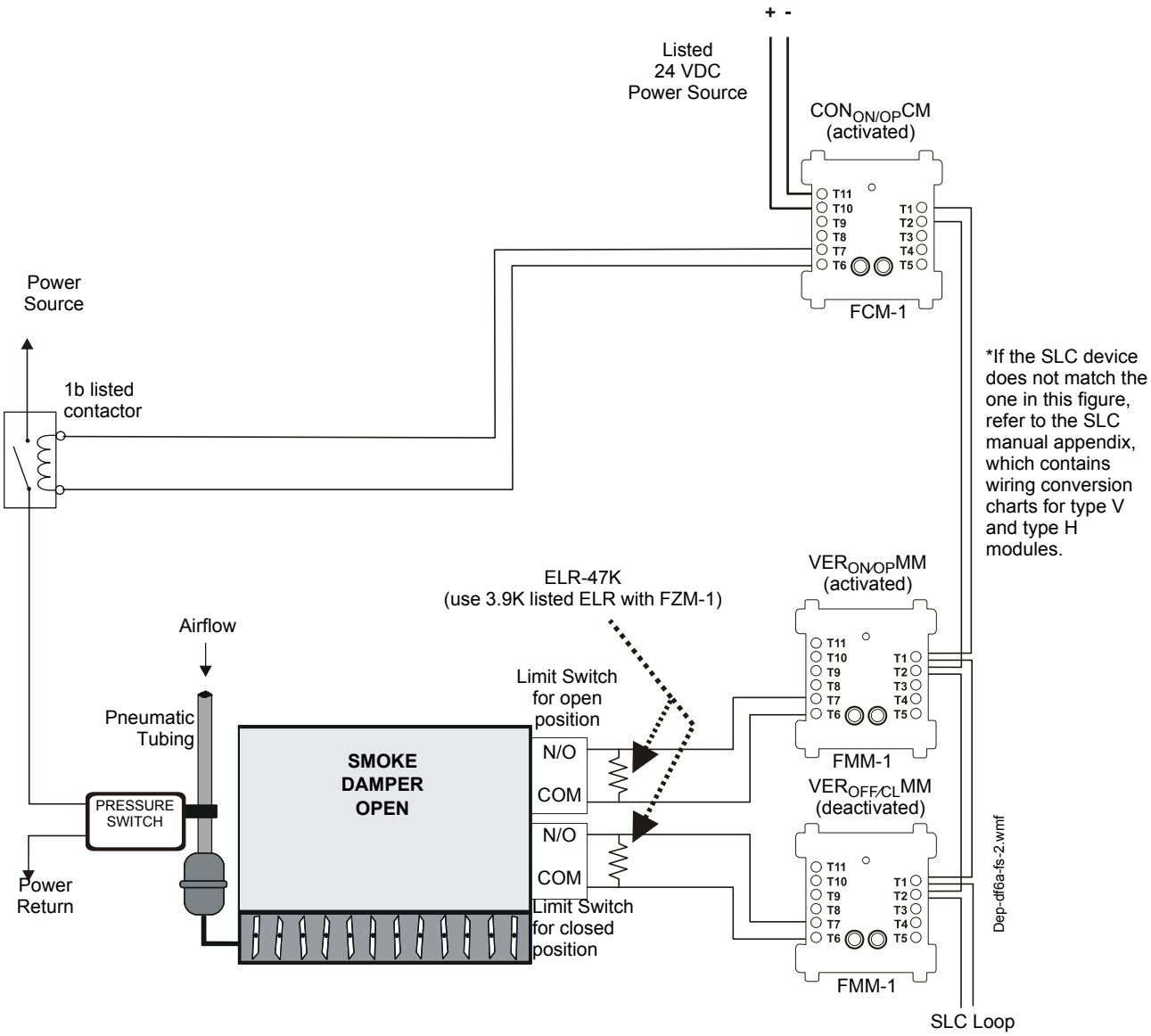

Figure 5.16 EP Damper Control, Dedicated System - FSCS Switch Group Type 6

Figure 5.16 depicts an EP damper in a dedicated system with the capability of OPEN control and verification of the OPEN and CLOSED state, switch group type 6. In the above configuration, the $CON_{ON/OP}CM$ is activated. The $CON_{ON/OP}CM$ controls a normally closed contactor for the pressure switch power. When the $CON_{ON/OP}CM$ is activated, the normally closed contactor is opened, thus cutting power from the pressure switch and causing the damper to open. When the damper completely opens, the open position limit switch is closed, indicating that the damper is in the OPEN position. (When the damper is in the closed position, the closed position limit switch is CLOSED.) The $VER_{ON/OP}MM$ monitors when the open position limit switch is CLOSED. In this case the $VER_{ON/OP}MM$ is activated and the $VER_{OFF/CL}MM$ is deactivated because the damper is OPEN.

In a dedicated system, a damper would never need both ON and OFF control. A damper for a dedicated system is either normally open and would need to be closed or normally closed and would need to be opened. This is not true for a Non-dedicated system.

Switch group type 7 would never be needed unless redundancy in OFF and ON control were necessary. Type 7 is used for ON and OFF control and verification of the OFF state. When the $CON_{ON/OP}CM$ is deactivated, the $CON_{OFF/CL}CM$ is activated, and vice versa. The $CON_{ON/OP}CM$ controls a normally closed contactor which switches power to the pressure switch. The $CON_{OFF/CL}CM$ controls a normally open contactor which switches power to the pressure switch. When the $CON_{ON/OP}CM$ is deactivated, the contactor is closed, thus supplying power to the pressure switch. When the $CON_{OFF/CL}CM$ is activated, the contactor is closed, thus supplying power to the pressure switch. Both control modules are not necessary to supply or cut the power to the damper: one is sufficient.

Switch group type 8 would never be needed unless redundancy in OFF and ON control were necessary. Type 8 is used for ON and OFF control and verification of the ON state. When the $CON_{ON/OP}CM$ is deactivated, the $CON_{OFF/CL}CM$ is activated, and vice versa. The $CON_{ON/OP}CM$ controls a normally closed contactor which switches power to the pressure switch. The $CON_{OFF/CL}CM$ controls a normally open contactor which switches power to the pressure switch. When the $CON_{ON/OP}CM$ is deactivated, the contactor is closed, thus supplying power to the pressure switch. When the $CON_{OFF/CL}CM$ is activated, the contactor is closed, thus supplying power to the pressure switch. Both control modules are not necessary to supply or cut the power to the damper: one is sufficient.

Switch group type 9 would never be needed unless redundancy in OFF and ON control were necessary. Type 9 is used for ON and OFF control and verification of the ON and OFF state. When the $CON_{ON/OP}CM$ is deactivated, the $CON_{OFF/CL}CM$ is activated, and vice versa. The $CON_{ON/OP}CM$ controls a normally closed contactor which switches power to the pressure switch. The $CON_{OFF/CL}CM$ controls a normally open contactor which switches power to the pressure switch. When the $CON_{ON/OP}CM$ is deactivated, the contactor is closed, thus supplying power to the pressure switch. When the $CON_{OFF/CL}CM$ is activated, the contactor is closed, thus supplying power to the pressure switch. Both control modules are not necessary to supply or cut the power to the damper: one is sufficient.

5.4 Non-dedicated Smoke Control System Wiring Diagrams

5.4.1 Fans

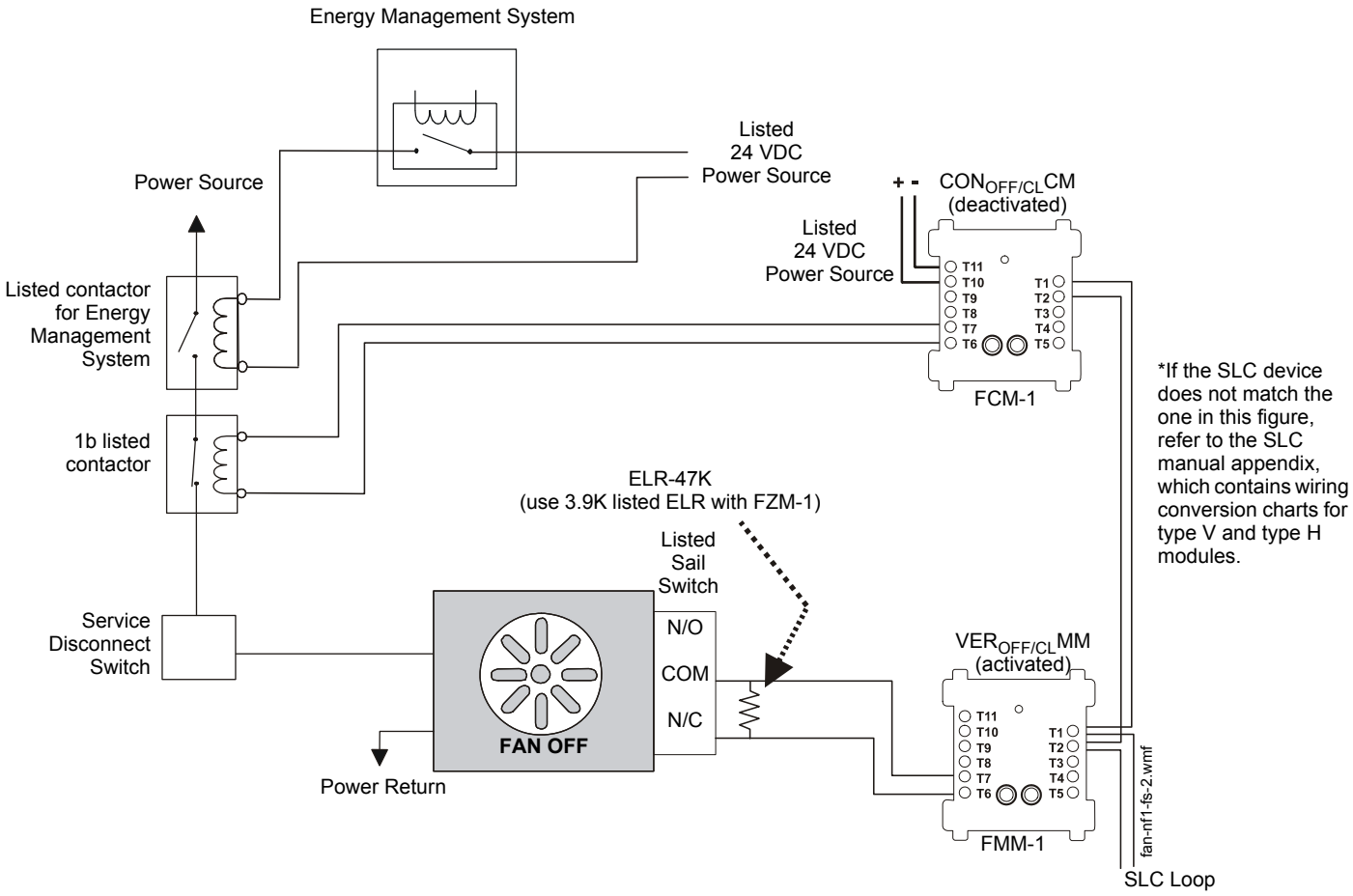

Figure 5.17 Fan Control, Non-dedicated System - FSCS Switch Group Type 1

Figure 5.17 depicts a fan in a non-dedicated system with the capability of OFF control and verification of the OFF state, switch group type 1. In the above configuration, the $CON_{OFF/CL}CM$ is deactivated. The $CON_{OFF/CL}CM$ controls a normally closed contactor which switches power to the fan (the contactor is used when the power being switched is greater than 24 volts). When the $CON_{OFF/CL}CM$ is deactivated, the contactor is closed, thus allowing the EMS to freely control the fan. In this case the EMS is OFF, so no power is being supplied to the fan. When no power is supplied to the fan, the fan is OFF and the sail switch is CLOSED, indicating no airflow in the duct. The $VER_{OFF/CL}MM$ monitors the CLOSED position of the sail switch, which would indicate when the fan is OFF. In this case the $VER_{OFF/CL}MM$ is activated because the fan is OFF due to the EMS. When the $CON_{OFF/CL}CM$ is activated, the normally closed contactor opens, thus cutting any power to the fan that was being supplied by the EMS.

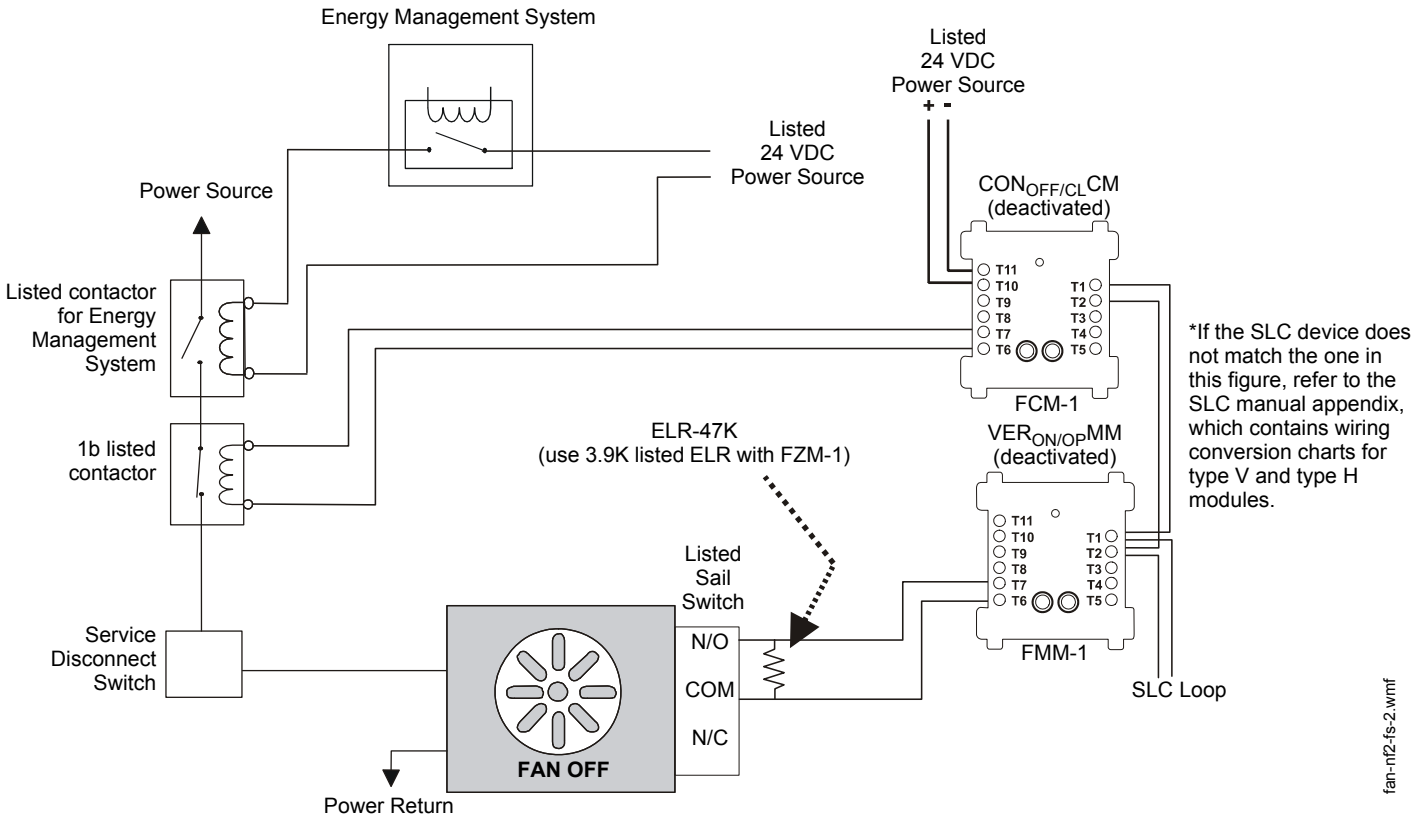

Figure 5.18 Fan Control, Non-dedicated System - FSCS Switch Group Type 2

Figure 5.18 depicts a fan in a non-dedicated system with the capability of OFF control and verification of the ON state, switch group type 2. In the above configuration, the $CON_{OFF/CL}CM$ is deactivated. The $CON_{OFF/CL}CM$ controls a normally closed contactor which switches power to the fan (the contactor is used when the power being switched is greater than 24 volts). When the $CON_{OFF/CL}CM$ is deactivated, the contactor is closed, thus allowing the EMS to freely control the fan. In this case the EMS is OFF, so no power is being supplied to the fan. When no power is supplied to the fan, the fan is OFF and the sail switch is CLOSED, indicating no airflow in the duct. The $VER_{ON/OP}MM$ monitors the OPEN position of the sail switch, which would indicate when the fan is ON. In this case the $VER_{ON/OP}MM$ is deactivated because the fan is OFF due to the EMS. When the $CON_{OFF/CL}CM$ is activated, the normally closed contactor opens, thus cutting any power to the fan that was being supplied by the EMS.

Switch group type 3 is for a fan that would require the capability of OFF control and verification of both the ON and OFF states. Since it is possible to determine this information from either switch group type 1 or switch group type 2, switch group type 3 would only be necessary for redundancy in verifying the state of the fan. For example, if switch group type 1 is used instead of switch group type 3, the OFF state of the fan would be verified when the monitor module is activated and the ON state of the fan would be verified when the monitor module is deactivated. Utilizing switch group types 1 or 2 also saves the use of an additional monitor module. Switch group type 3 would use two monitor modules to provide the same verification as types 1 or 2.

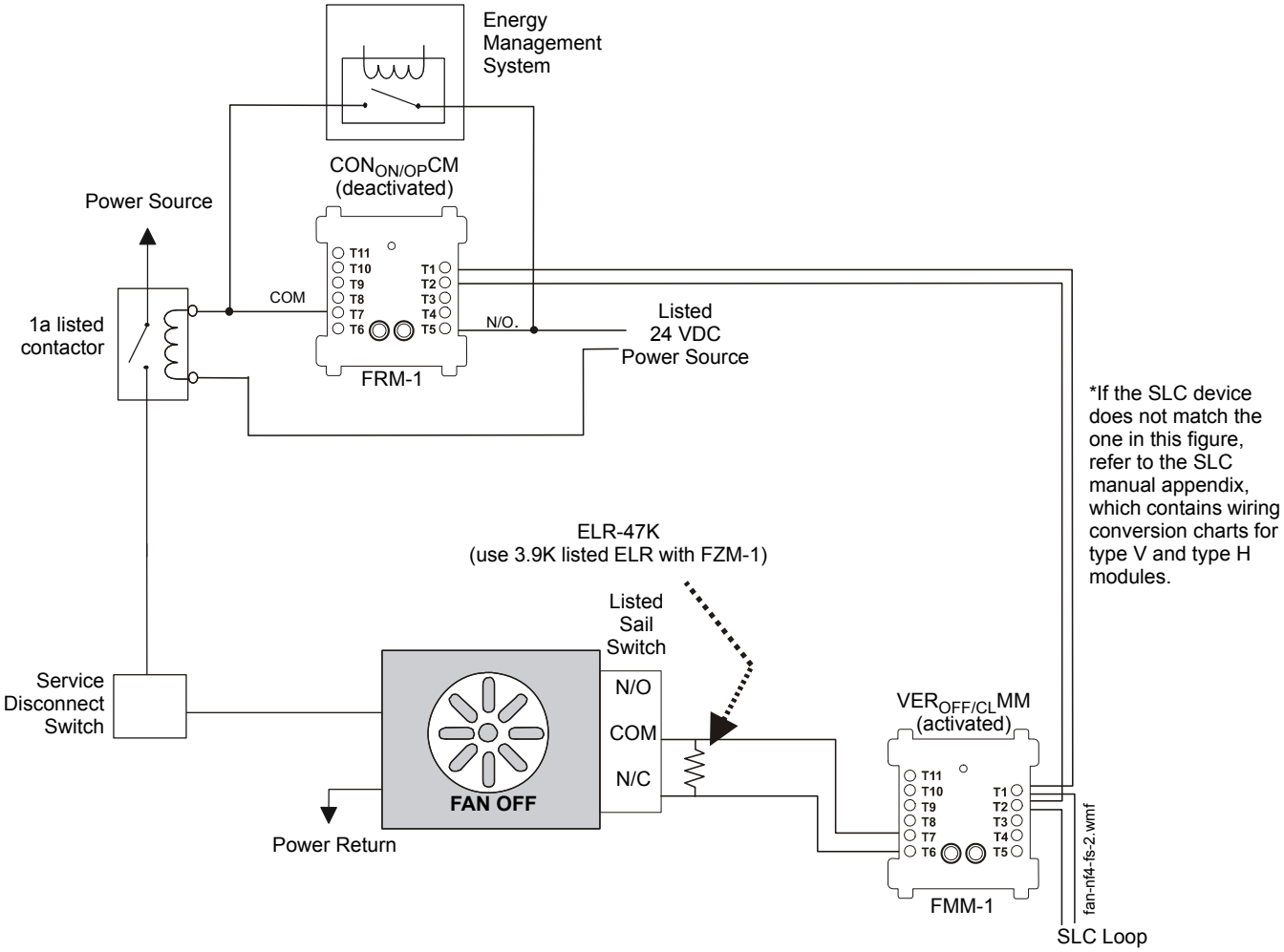

Figure 5.19 Fan Control, Non-dedicated System - FSCS Switch Group Type 4

Figure 5.19 depicts a fan in a non-dedicated system with the capability of ON control and verification of the OFF state, switch group type 4. In the above configuration, the $CON_{ON/OP}CM$ is deactivated. The $CON_{ON/OP}CM$ is wired in parallel with the EMS; when wired in parallel with the EMS the CM must be a relay module. When the $CON_{ON/OP}CM$ is deactivated, the EMS is free to control the fan. In this case the EMS is OFF, so no power is being supplied to the fan. When no power is supplied to the fan, the fan is OFF and the sail switch is CLOSED, indicating no airflow in the duct. The $VER_{OFF/CL}MM$ monitors the CLOSED position of the sail switch, which would indicate when the fan is OFF. In this case the $VER_{OFF/CL}MM$ is activated because the fan is OFF due to the EMS. When the $CON_{ON/OP}CM$ is activated, the $CON_{ON/OP}CM$ overrides whatever state the EMS is in and closes the normally open contactor, thus supplying power to the fan and turning it on.

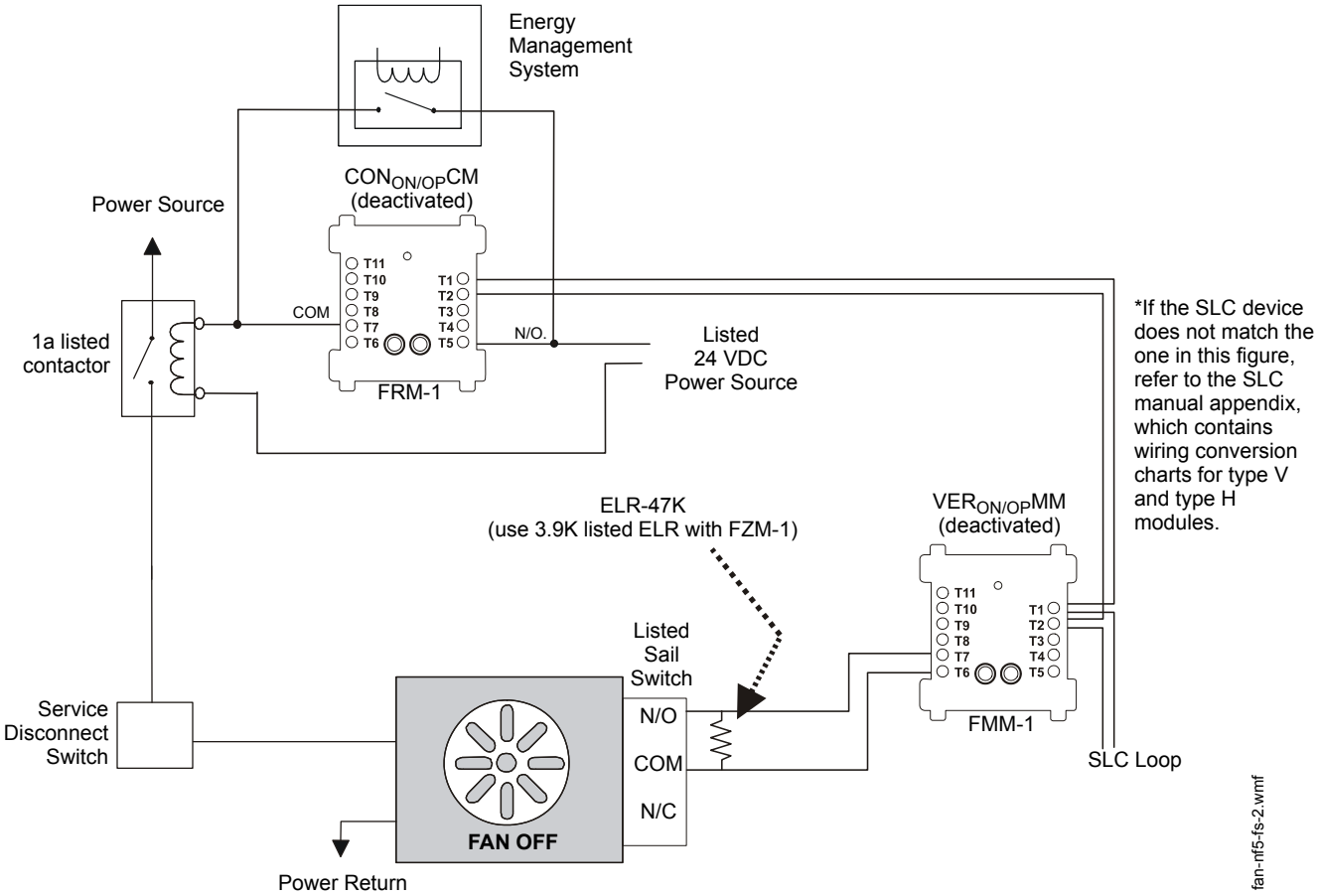

Figure 5.20 Fan Control, Non-dedicated System - FSCS Switch Group Type 5

Figure 5.20 depicts a fan in a non-dedicated system with the capability of ON control and verification of the ON state, switch group type 5. In the above configuration, the CON$_{ON/OP}$CM is deactivated. The CON$_{ON/OP}$CM is wired in parallel with the EMS; when wired in parallel with the EMS the CM must be a relay module. When the CON$_{ON/OP}$CM is deactivated, the EMS is free to control the fan. In this case the EMS is OFF, so no power is being supplied to the fan. When no power is supplied to the fan, the fan is OFF and the sail switch is CLOSED, indicating no airflow in the duct. The VER$_{ON/OP}$MM monitors the OPEN position of the sail switch, which would indicate when the fan is ON. In this case the VER$_{ON/OP}$MM is deactivated because the fan is OFF due to the EMS. When the CON$_{ON/OP}$CM is activated, the CON$_{ON/OP}$CM overrides whatever state the EMS is in and closes the normally open contactor, thus supplying power to the fan and turning it ON.

Switch group type 6 is for a fan that would require the capability of ON control and verification of both the ON and OFF states. Since it is possible to determine this information from both switch group type 4 or switch group type 5, switch group type 6 would only be necessary for redundancy in verifying the state of the fan. For example, if switch group type 4 is used instead of switch group type 6, the OFF state of the fan would be verified when the monitor module is activated and the ON state of the fan would be verified when the monitor module is deactivated. Utilizing switch group type 4 or 5 also saves the use of an additional monitor module. Switch group type 6 would use two monitor modules to provide the same verification as types 4 or 5.

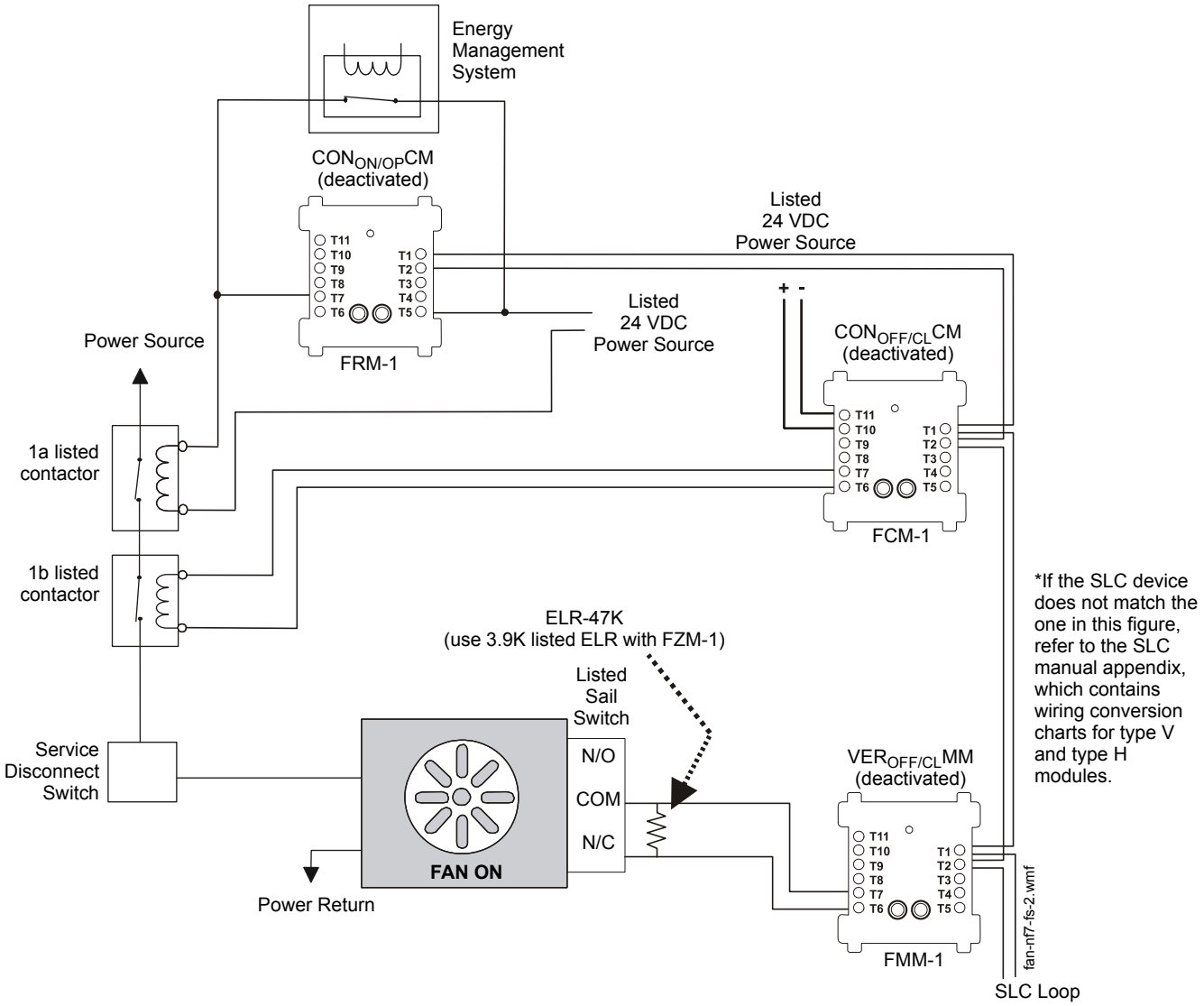

Figure 5.21 Fan Control, Non-dedicated System - FSCS Switch Group Type 7

Figure 5.21 depicts a fan in a non-dedicated system with the capability of ON and OFF control and verification of the OFF state, switch group type 7. In the above configuration, the $CON_{ON/OP}CM$ is deactivated and the $CON_{OFF/CL}CM$ is deactivated. These two control modules are always in the opposite state when the smoke control system is in operation and are always deactivated during normal operation. The $CON_{ON/OP}CM$ is wired in parallel with the EMS; when wired in parallel with the EMS the CM must be a relay module. When the $CON_{ON/OP}CM$ and the $CON_{OFF/CL}CM$ are deactivated, the EMS is free to control the fan. In this case the EMS is ON, so power is being supplied to the fan. When power is supplied to the fan, the fan is ON and the sail switch is OPEN, indicating airflow in the duct. The $VER_{OFF/CL}MM$ monitors the CLOSED position of the sail switch, which would indicate when the fan is OFF. In this case the $VER_{OFF/CL}MM$ is deactivated because the fan is ON due to the EMS. When the $CON_{ON/OP}CM$ is activated for smoke control, the $CON_{ON/OP}CM$ overrides whatever state the EMS is in and closes the normally open contactor, thus supplying power to the fan and turning it ON. When the $CON_{OFF/CL}CM$ is activated for smoke control, the $CON_{OFF/CL}CM$ opens the normally closed contactor and turns the fan OFF, overriding whatever state the EMS is in.

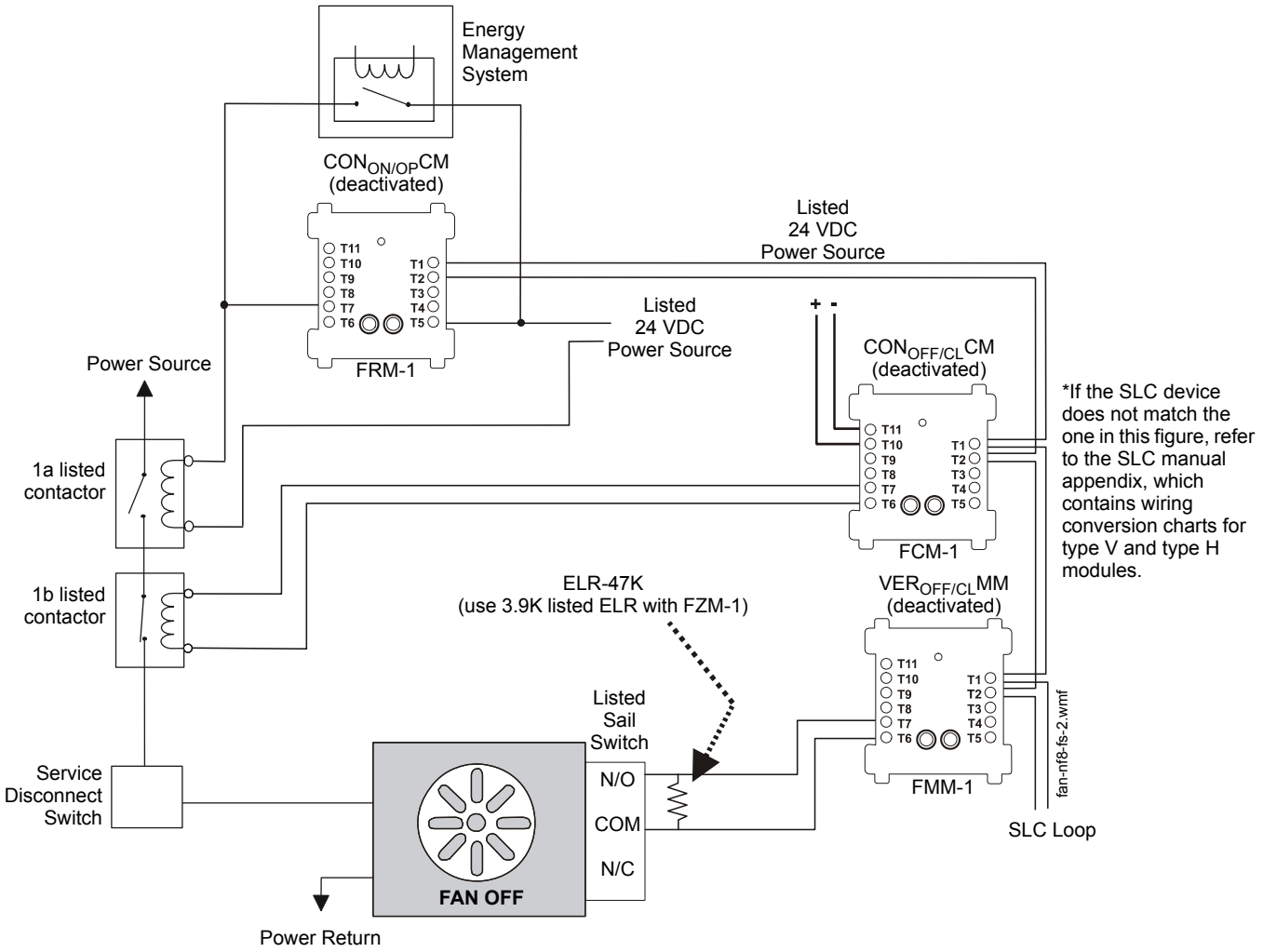

Figure 5.22 Fan Control, Non-dedicated System - FSCS Switch Group Type 8

Figure 5.22 depicts a fan in a non-dedicated system with the capability of ON and OFF control and verification of the ON state, switch group type 8. In the above configuration, the $CON_{ON/OP}CM$ is deactivated and the $CON_{OFF/CL}CM$ is deactivated. These two control modules are always in the opposite state when the smoke control system is in operation and are always deactivated during normal operation. The $CON_{ON/OP}CM$ is wired in parallel with the EMS; when wired in parallel with the EMS the CM must be a relay module. When the $CON_{ON/OP}CM$ and the $CON_{OFF/CL}CM$ are deactivated, the EMS is free to control the fan. In this case the EMS is OFF, so no power is being supplied to the fan. When no power is supplied to the fan, the fan is OFF and the sail switch is CLOSED, indicating no airflow in the duct. The $VER_{ON/OP}MM$ monitors the OPEN position of the sail switch, which would indicate when the fan is ON. In this case the $VER_{ON/OP}MM$ is deactivated because the fan is OFF due to the EMS. When the $CON_{ON/OP}CM$ is activated for smoke control, the $CON_{ON/OP}CM$ overrides whatever state the EMS is in and closes the normally open contactor, thus supplying power to the fan and turning it ON. When the $CON_{OFF/CL}CM$ is activated for smoke control, the $CON_{OFF/CL}CM$ opens the normally closed contactor and turns the fan OFF, overriding whatever state the EMS is in.

Switch group type 9 is used for ON and OFF control and verification of the ON and OFF state. Since it is possible to determine both ON and OFF verification from switch group type 7 or switch group type 8, switch group type 9 would only be necessary for redundancy in verifying the state of the fan. For example, if switch group type 7 is used instead of switch group type 8, the OFF state of the fan would be verified when the monitor module is activated and the ON state of the fan would be verified when the monitor module is deactivated. Utilizing switch group types 7 or 8 also saves the use of an additional monitor module. Switch group type 9 would use two monitor modules to provide the same verification as types 7 or 8.

5.4.2 Motorized Dampers

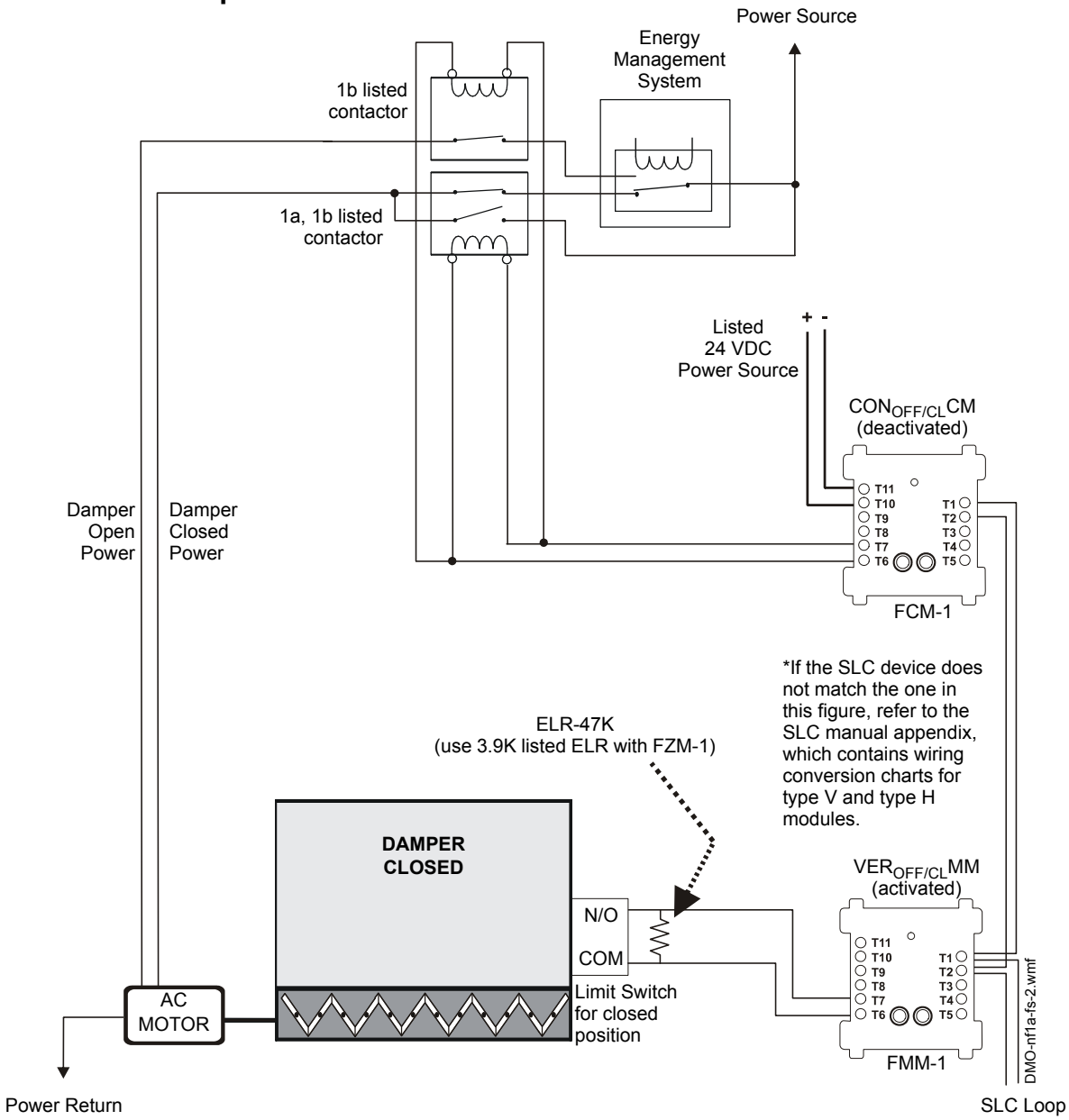

Figure 5.23 Motorized Damper Control
Non-dedicated System - FSCS Switch Group Type 1

Figure 5.23 depicts a motorized damper in a non-dedicated system with the capability of CLOSED control and verification of the CLOSED state, switch group type 1. In the above configuration, the $CON_{OFF/CL}CM$ is deactivated. The $CON_{OFF/CL}CM$ controls two contactors: a normally closed contactor for the damper open power line, and a dual normally open/normally closed contactor for the damper close power. When the $CON_{OFF/CL}CM$ is activated, the normally closed contactor is opened (cutting any power supplied by the EMS to the damper open power line), the normally closed portion of the dual contactor is opened (cutting any power supplied by the EMS to the damper closed power line), and the normally open portion of the dual contactor is closed, thus supplying power to close the damper. When the $CON_{OFF/CL}CM$ is deactivated, the EMS is free to control the damper. The EMS is currently supplying power to the damper closed power line.

When power is supplied to the damper closed power line, the damper closes. When the damper completely closes, the damper closed limit switch is CLOSED, indicating that the damper is in the CLOSED position. The $VER_{OFF/CL}MM$ monitors the CLOSED position of the damper closed limit switch. In this case the $VER_{OFF/CL}MM$ is activated because the damper is CLOSED.

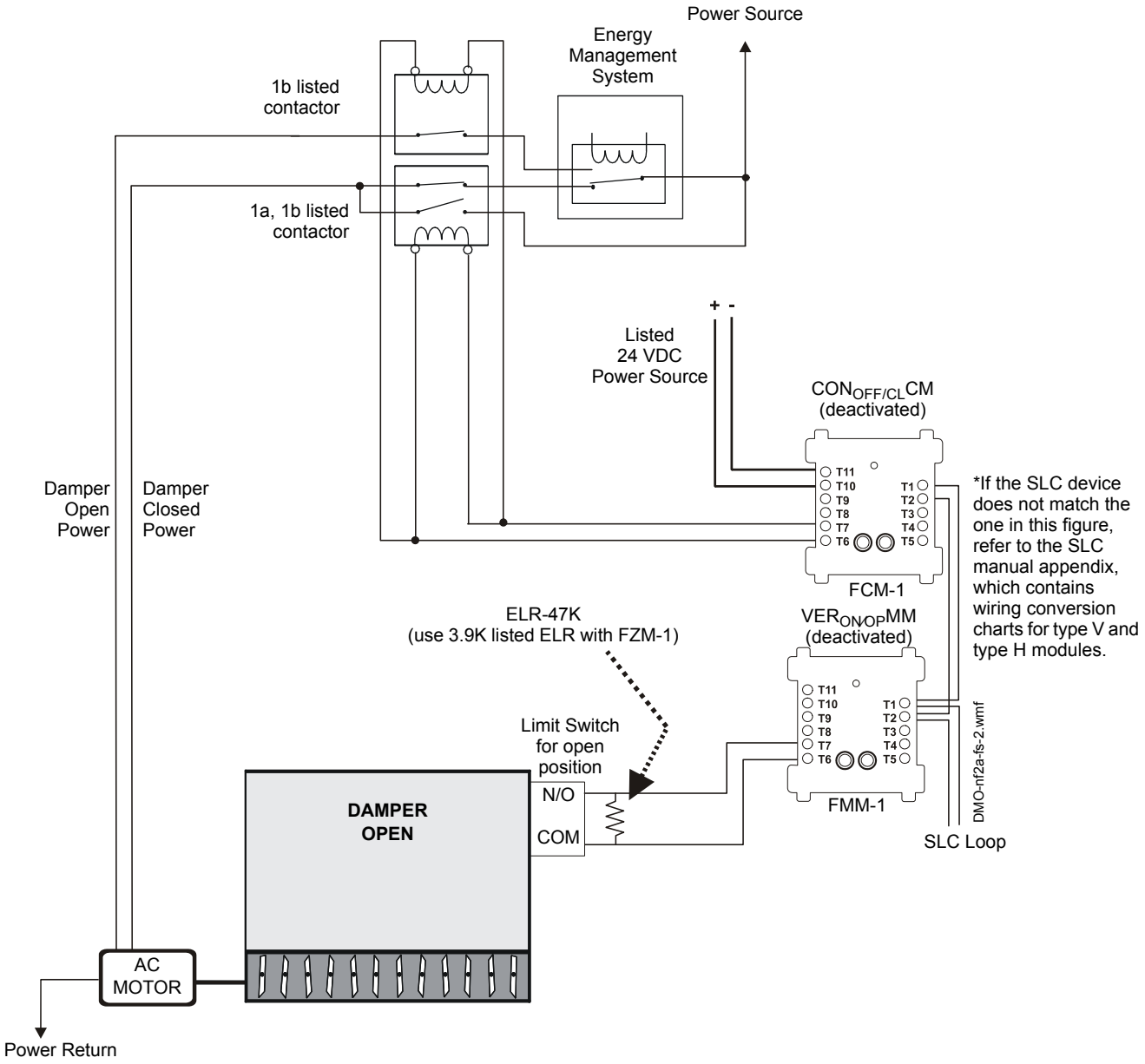

Figure 5.24 Motorized Damper Control
Non-dedicated System - FSCS Switch Group Type 2

Figure 5.24 depicts a motorized damper in a non-dedicated system with the capability of CLOSED control and verification of the OPEN state, switch group type 2. In the above configuration, the $CON_{OFF/CL}CM$ is deactivated. The $CON_{OFF/CL}CM$ controls two contactors: a normally closed contact for the damper open power line, and a dual normally open/normally closed contactor for the damper close power. When the $CON_{OFF/CL}CM$ is activated, the normally closed contactor is opened (cutting any power supplied by the EMS to the damper open power line), the normally closed portion of the dual contactor is opened (cutting any power supplied by the EMS to the damper closed power line), and the normally open portion of the dual contactor is closed, thus supplying power to close the damper. When the $CON_{OFF/CL}CM$ is deactivated, the EMS is free to control the damper. The EMS is currently supplying power to the damper closed power line.

When power is supplied to the damper closed power line, the damper closes. When the damper completely closes, the damper closed limit switch is CLOSED, indicating that the damper is in the CLOSED position. The $VER_{ON/OP}MM$ monitors the CLOSED position of the damper open limit switch. In this case the $VER_{ON/OP}MM$ is deactivated because the damper is CLOSED.

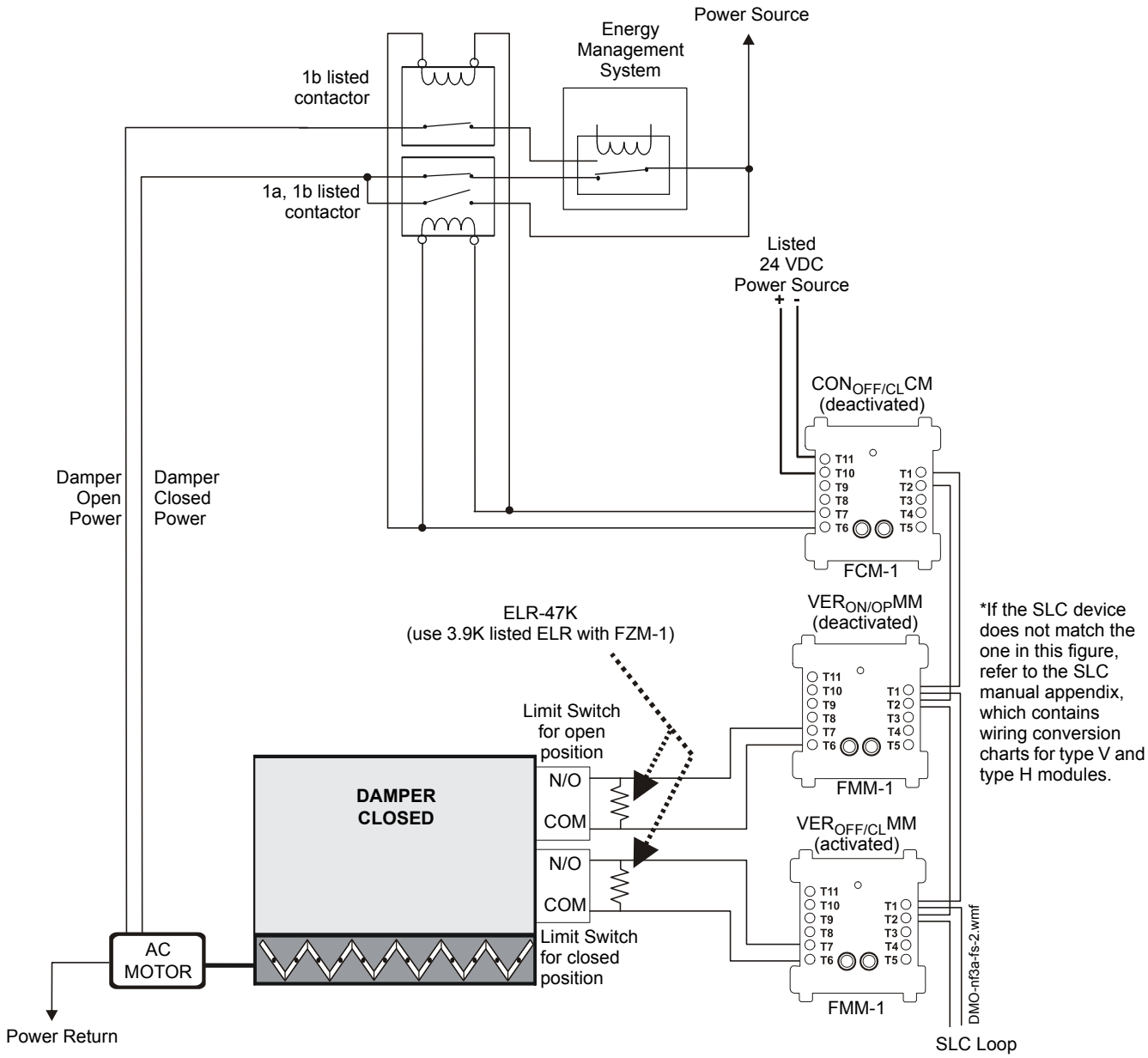

Figure 5.25 Motorized Damper Control
Non-dedicated System - FSCS Switch Group Type 3

Figure 5.25 depicts a motorized damper in a non-dedicated system with the capability of CLOSED control and verification of the OPEN and CLOSED state, switch group type 3. In the above configuration, the $CON_{OFF/CL}CM$ is deactivated. The $CON_{OFF/CL}CM$ controls two contactors: a normally closed contactor for the damper open power line, and a dual normally open/normally closed contactor for the damper close power line. When the $CON_{OFF/CL}CM$ is activated, the normally closed contactor is opened (cutting any power supplied by the EMS to the damper open power line), the normally closed portion of the dual contactor is opened (cutting any power supplied by the EMS to the damper closed power line), and the normally open portion of the dual contactor is closed, thus supplying power to close the damper. When the $CON_{OFF/CL}CM$ is deactivated, the EMS is free to control the damper. The EMS is currently supplying power to the damper closed power line.

When power is supplied to the damper closed power line, the damper closes. When the damper completely closes, the damper closed limit switch is CLOSED, indicating that the damper is in the CLOSED position. The $VER_{OFF/CL}MM$ monitors the CLOSED position of the damper closed limit switch and the $VER_{ON/OP}MM$ monitors the CLOSED position of the damper open limit switch. In this case the $VER_{OFF/CL}MM$ is activated and the $VER_{ON/OP}MM$ is deactivated because the damper is CLOSED.

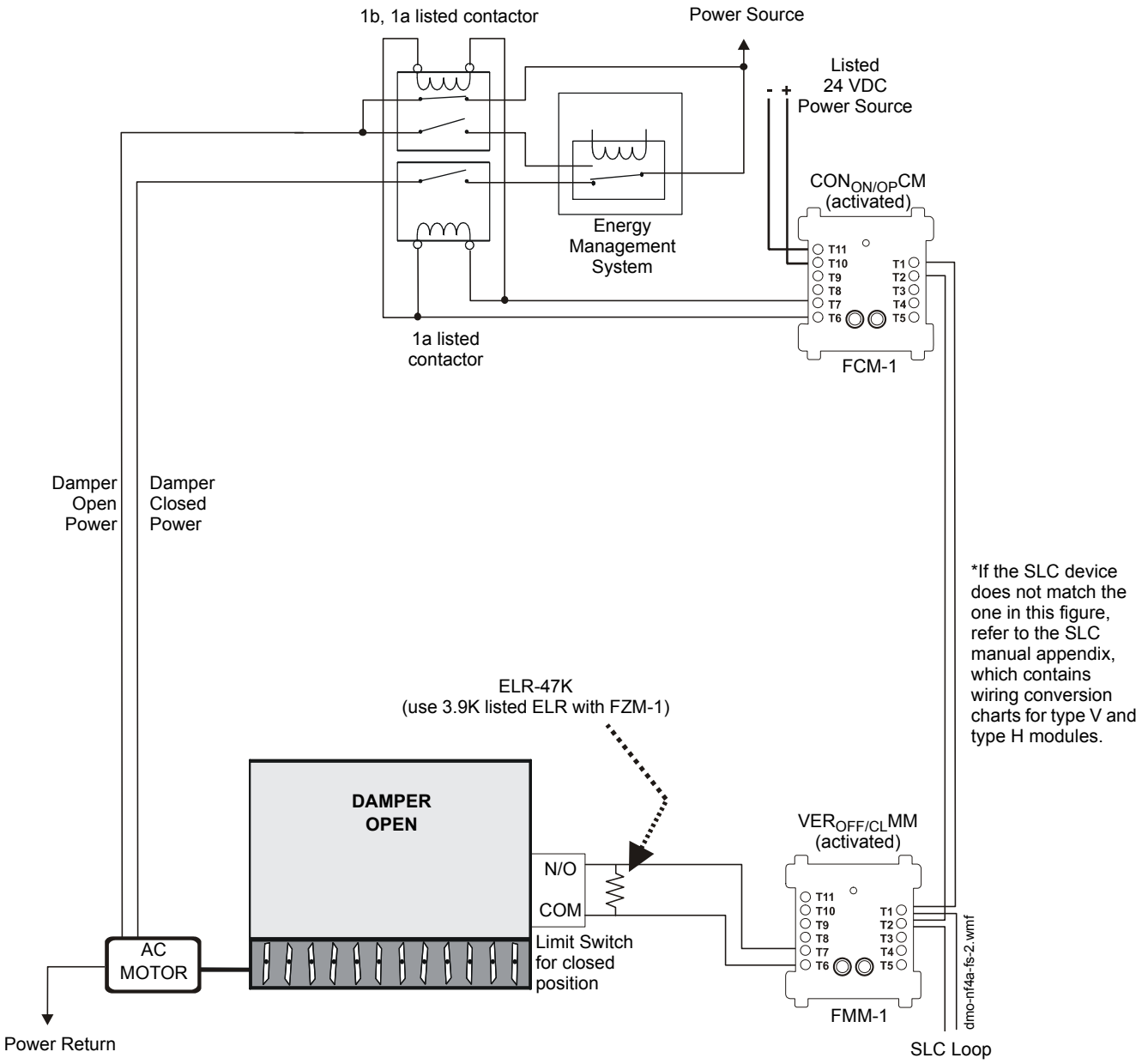

Figure 5.26 Motorized Damper Control
Non-dedicated System - FSCS Switch Group Type 4

Figure 5.26 depicts a motorized damper in a non-dedicated system with the capability of OPEN control and verification of the CLOSED state, switch group type 4. In the above configuration, the $CON_{ON/OP}CM$ is activated. The $CON_{ON/OP}CM$ controls two contactors: a normally closed contactor for the damper closed power line, and a dual normally open/normally closed contactor for the damper open power line. When the $CON_{ON/OP}CM$ is activated, the normally closed contactor is opened (cutting any power supplied by the EMS to the damper closed power line), the normally closed portion of the dual contactor is opened (cutting any power supplied by the EMS to the damper open power line), and the normally open portion of the dual contactor is closed, thus supplying power to close the damper. When the $CON_{ON/OP}CM$ is deactivated, the EMS is free to control the damper. The EMS is currently being overridden by the $CON_{ON/OP}CM$.

When power is supplied to the damper open power line, the damper opens. When the damper completely opens, the damper open limit switch is CLOSED, indicating that the damper is in the OPEN position. The $VER_{OFF/CL}MM$ monitors the CLOSED position of the damper closed limit switch. In this case the $VER_{OFF/CL}MM$ is deactivated because the damper is OPEN.

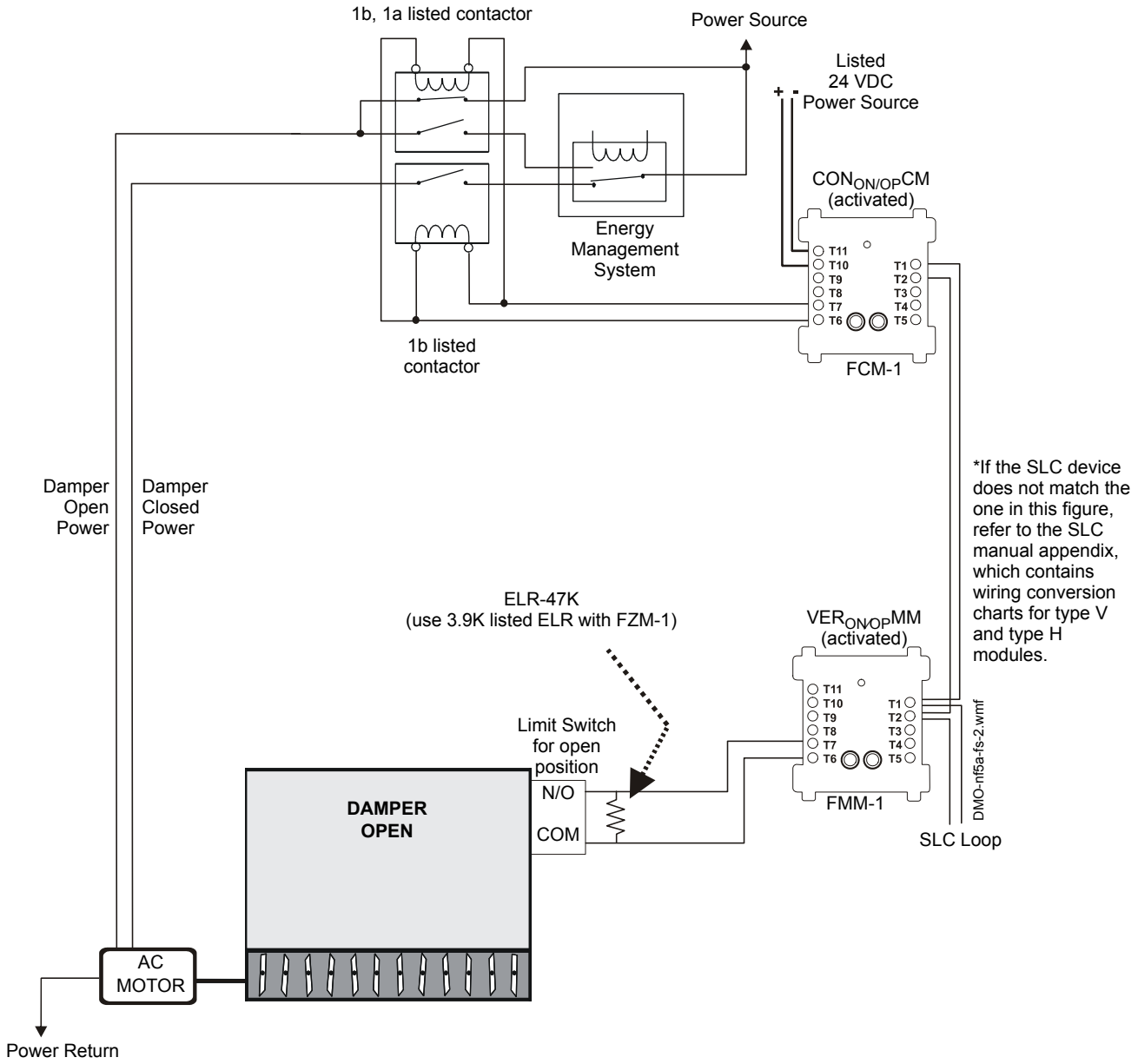

Figure 5.27 Motorized Damper Control
Non-dedicated System - FSCS Switch Group Type 5

Figure 5.27 depicts a motorized damper in a non-dedicated system with the capability of OPEN control and verification of the OPEN state, switch group type 5. In the above configuration, the CON$_{ON/OP}$CM is activated. The CON$_{ON/OP}$CM controls two contactors: a normally closed contact for the damper closed power line, and a dual normally open/ normally closed contact for the damper open power line. When the CON$_{ON/OP}$CM is activated, the normally closed contact is opened (cutting any power supplied by the EMS to the damper closed power line), the normally closed portion of the dual contact is opened (cutting any power supplied by the EMS to the damper open power line), and the normally open portion of the dual contact is closed, thus supplying power to close the damper. When the CON$_{ON/OP}$CM is deactivated, the EMS is free to control the damper. The EMS is currently being overridden by the CON$_{ON/OP}$CM.

When power is supplied to the damper open power line, the damper opens. When the damper completely opens, the damper open limit switch is CLOSED, indicating that the damper is in the OPEN position. The VER$_{ON/OP}$MM monitors the CLOSED position of the damper open limit switch. In this case the VER$_{ON/OP}$MM is activated because the damper is OPEN.

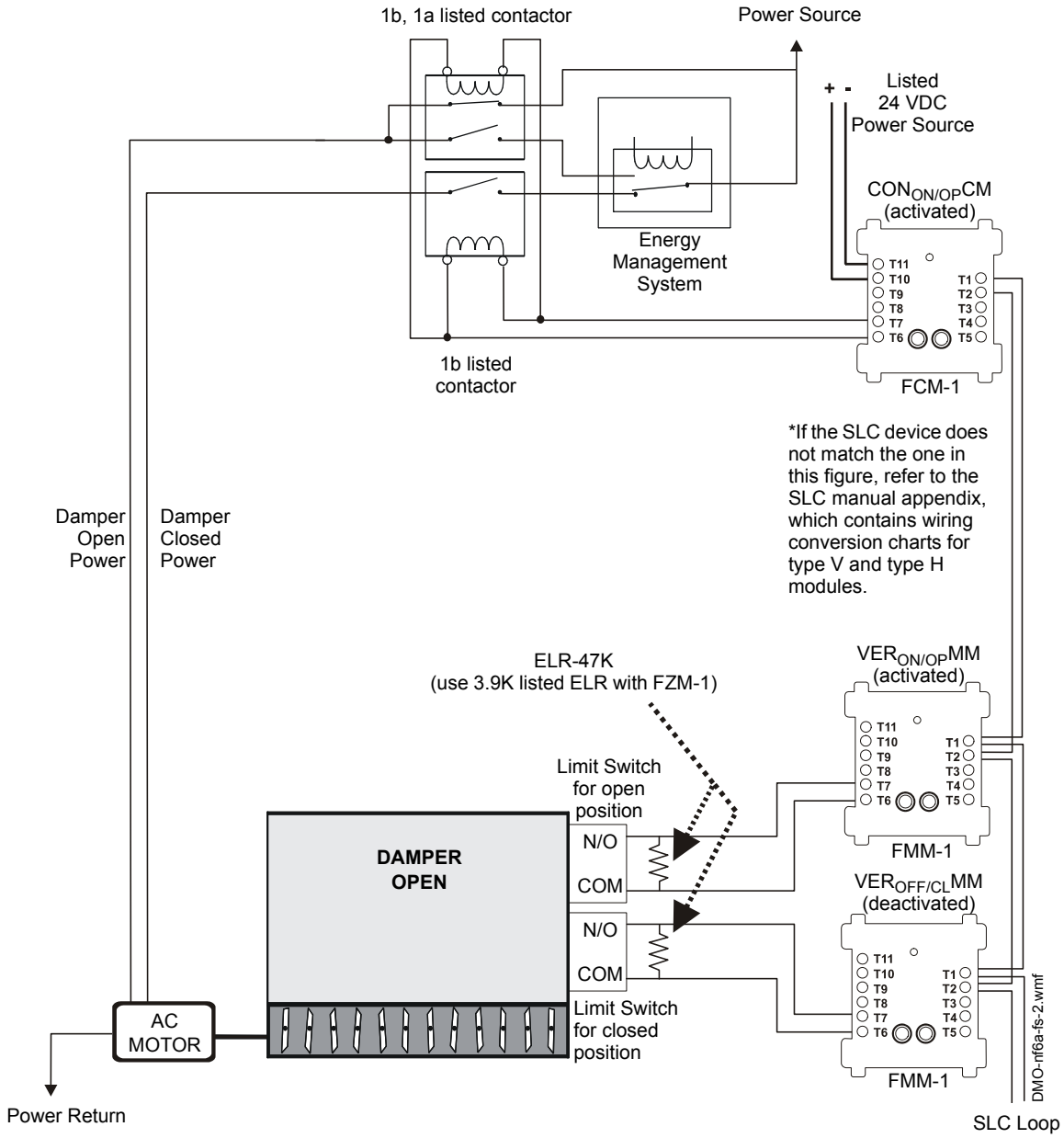

Figure 5.28 Motorized Damper Control
Non-dedicated System - FSCS Switch Group Type 6

Figure 5.28 depicts a motorized damper in a non-dedicated system with the capability of OPEN control and verification of the OPEN and CLOSED state, switch group type 6. In the above configuration, the $CON_{ON/OP}CM$ is activated. The $CON_{ON/OP}CM$ controls two contacts: a normally closed contact for the damper closed power line, and a dual normally open/normally closed contact for the damper open power line. When the $CON_{ON/OP}CM$ is activated, the normally closed contact is opened (cutting any power supplied by the EMS to the damper closed power line), the normally closed portion of the dual contactor is opened (cutting any power supplied by the EMS to the damper open power line), and the normally open portion of the dual contactor is closed, thus supplying power to close the damper. When the $CON_{ON/OP}CM$ is deactivated, the EMS is free to control the damper. The EMS is currently being overridden by the $CON_{ON/OP}CM$.

When power is supplied to the damper open power line, the damper opens. When the damper completely opens, the damper open limit switch is CLOSED, indicating that the damper is in the OPEN position. The $VER_{OFF/CL}MM$ monitors the CLOSED position of the damper closed limit switch and the $VER_{ON/OP}MM$ monitors the CLOSED position of the damper open limit switch. In this case the $VER_{OFF/CL}MM$ is deactivated and the $VER_{ON/OP}MM$ is activated because the damper is OPEN.

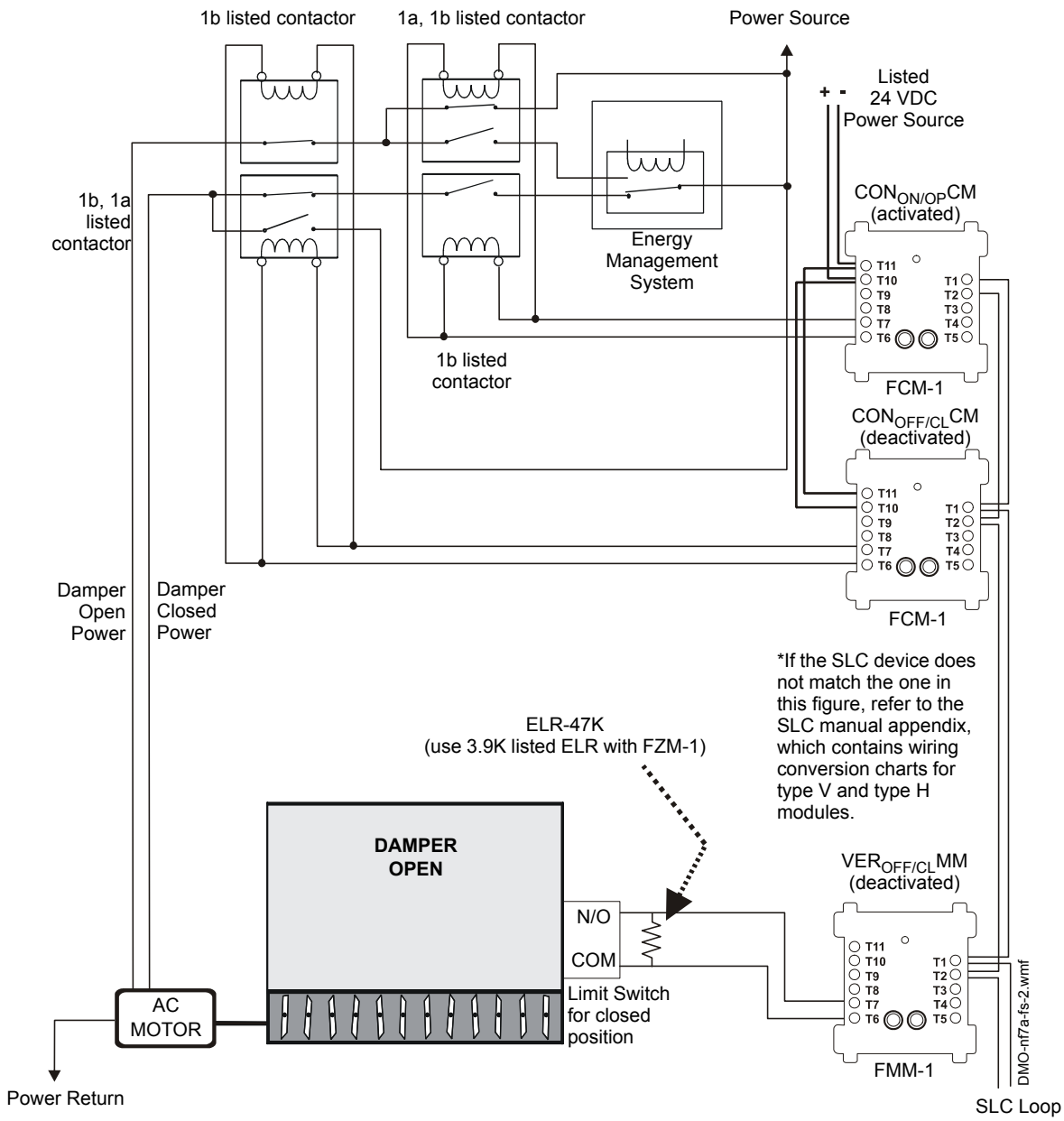

Figure 5.29 Motorized Damper Control
Non-dedicated System - FSCS Switch Group Type 7

Figure 5.29 depicts a motorized damper in a non-dedicated system with the capability of OPEN and CLOSED control and verification of the CLOSED state, switch group type 7. In this configuration, the $CON_{ON/OP}CM$ is activated and the $CON_{OFF/CL}CM$ is deactivated. Under normal operation (non-smoke control mode) both control modules would be deactivated, allowing the EMS system to freely control the damper. The $CON_{ON/OP}CM$ controls two contactors: a normally closed contactor for the damper closed power line, and a dual normally open/normally closed contactor for the damper open power line. The $CON_{OFF/CL}CM$ controls two contactors: a normally closed contactor for the damper open power line, and a dual normally open/normally closed contactor for the damper close power line. When the $CON_{ON/OP}CM$ is activated, the $CON_{OFF/CL}CM$ is deactivated, and vice versa. When the $CON_{ON/OP}CM$ is activated, the normally closed contactor is opened (cutting any power supplied by the EMS to the damper closed power line), the normally closed portion of the dual contactor is opened (cutting any power supplied by the EMS to the damper open power line), and the normally open portion of the dual contactor is closed, thus supplying power to open the damper. When power is supplied to the damper open power line, the damper opens. When the damper completely opens, the damper open limit switch is CLOSED, indicating that the damper is in the OPEN position. The $VER_{OFF/CL}MM$ monitors the CLOSED position of the damper closed limit switch. In this case the $VER_{OFF/CL}MM$ is deactivated because the damper is OPEN.

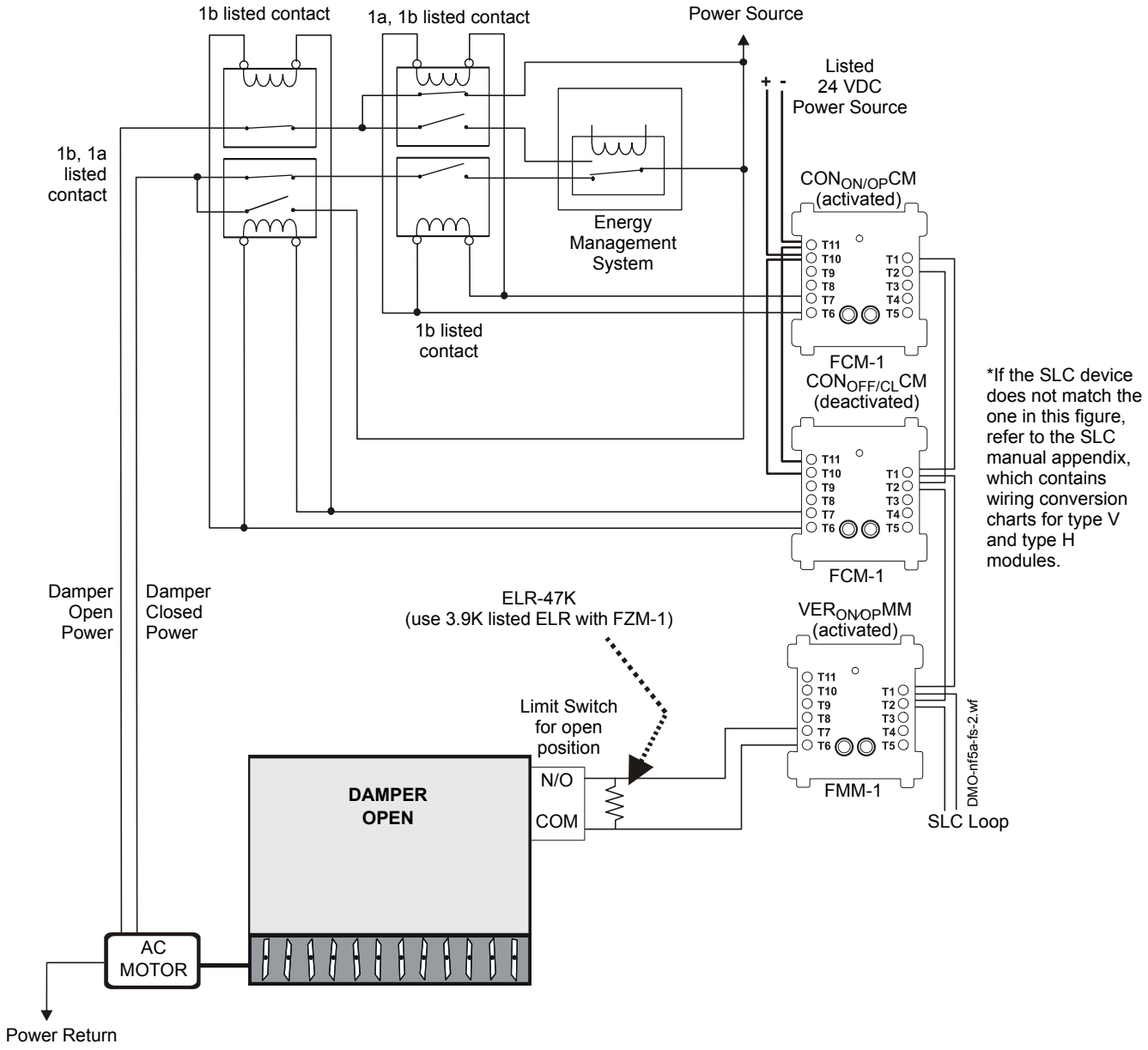

Figure 5.30 Motorized Damper Control
Non-dedicated System - FSCS Switch Group Type 8

Figure 5.30 depicts a motorized damper in a non-dedicated system with the capability of OPEN and CLOSED control and verification of the OPEN state, switch group type 8. In the above configuration, the $CON_{ON/OP}CM$ is activated and the $CON_{OFF/CL}CM$ is deactivated. Under normal operation (non smoke control mode) both control modules would be deactivated, allowing the EMS system to freely control the damper. The $CON_{ON/OP}CM$ controls two contactors: a normally closed contactor for the damper closed power line, and a dual normally open/normally closed contactor for the damper open power line. The $CON_{OFF/CL}CM$ controls two contactors: a normally closed contactor for the damper open power line, and a dual normally open/normally closed contactor for the damper close power line. When the $CON_{ON/OP}CM$ is activated, the $CON_{OFF/CL}CM$ is deactivated, and vice versa. When the $CON_{ON/OP}CM$ is activated, the normally closed contactor is opened (cutting any power supplied by the EMS to the damper closed power line), the normally closed portion of the dual contactor is opened (cutting any power supplied by the EMS to the damper open power line), and the normally open portion of the dual contactor is closed, thus supplying power to the damper.

When power is supplied to the damper open power line, the damper opens. When the damper completely opens, the damper open limit switch is CLOSED, indicating that the damper is in the OPEN position. The $VER_{ON/OP}MM$ monitors the CLOSED position of the damper open limit switch. In this case the $VER_{ON/OP}MM$ is activated because the damper is OPEN.

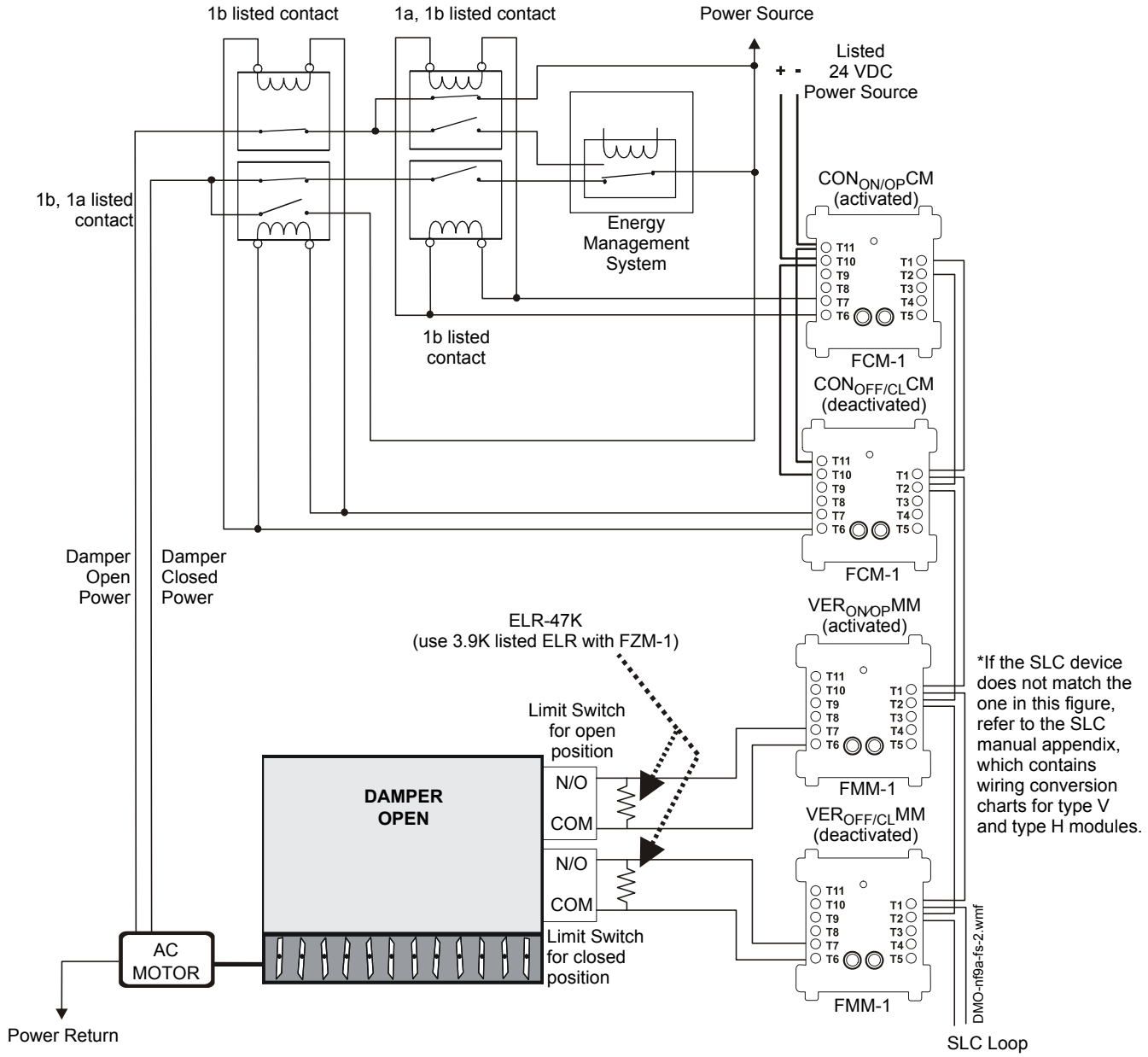

Figure 5.31 Motorized Damper Control
Non-dedicated System - FSCS Switch Group Type 9

Figure 5.31 depicts a motorized damper in a non-dedicated system with the capability of OPEN and CLOSED control and verification of the OPEN and CLOSED state, switch group type 9. In the above configuration, the $CON_{ON/OP}CM$ is activated and the $CON_{OFF/CL}CM$ is deactivated. Under normal operation (non-smoke control mode) both control modules would be deactivated, allowing the EMS system to freely control the damper. The $CON_{ON/OP}CM$ controls two contactors: a normally closed contactor for the damper closed power line, and a dual normally open/normally closed contactor for the damper open power line. The $CON_{OFF/CL}CM$ controls two contactors: a normally closed contactor for the damper open power line, and a dual normally open/normally closed contactor for the damper close power line. When the $CON_{ON/OP}CM$ is activated, the $CON_{OFF/CL}CM$ is deactivated, and vice versa. When the $CON_{ON/OP}CM$ is activated, the normally closed contactor is opened (cutting any power supplied by the EMS to the damper closed power line), the normally closed portion of the dual contactor is opened (cutting any power supplied by the EMS to the damper open power line), and the normally open portion of the dual contactor is closed, thus supplying power to open the damper.

When power is supplied to the damper open power line, the damper opens. When the damper completely opens, the damper open limit switch is CLOSED and the damper closed switch OPENs, indicating that the damper is in the OPEN position. The $VER_{ON/OP}MM$ monitors the CLOSED position of the damper open limit switch and the $VER_{OFF/CL}MM$ monitors the CLOSED position of the damper closed limit switch. In this case, the $VER_{ON/OP}MM$ is activated and the $VER_{OFF/CL}MM$ is deactivated because the damper is OPEN.

5.4.3 EP Dampers

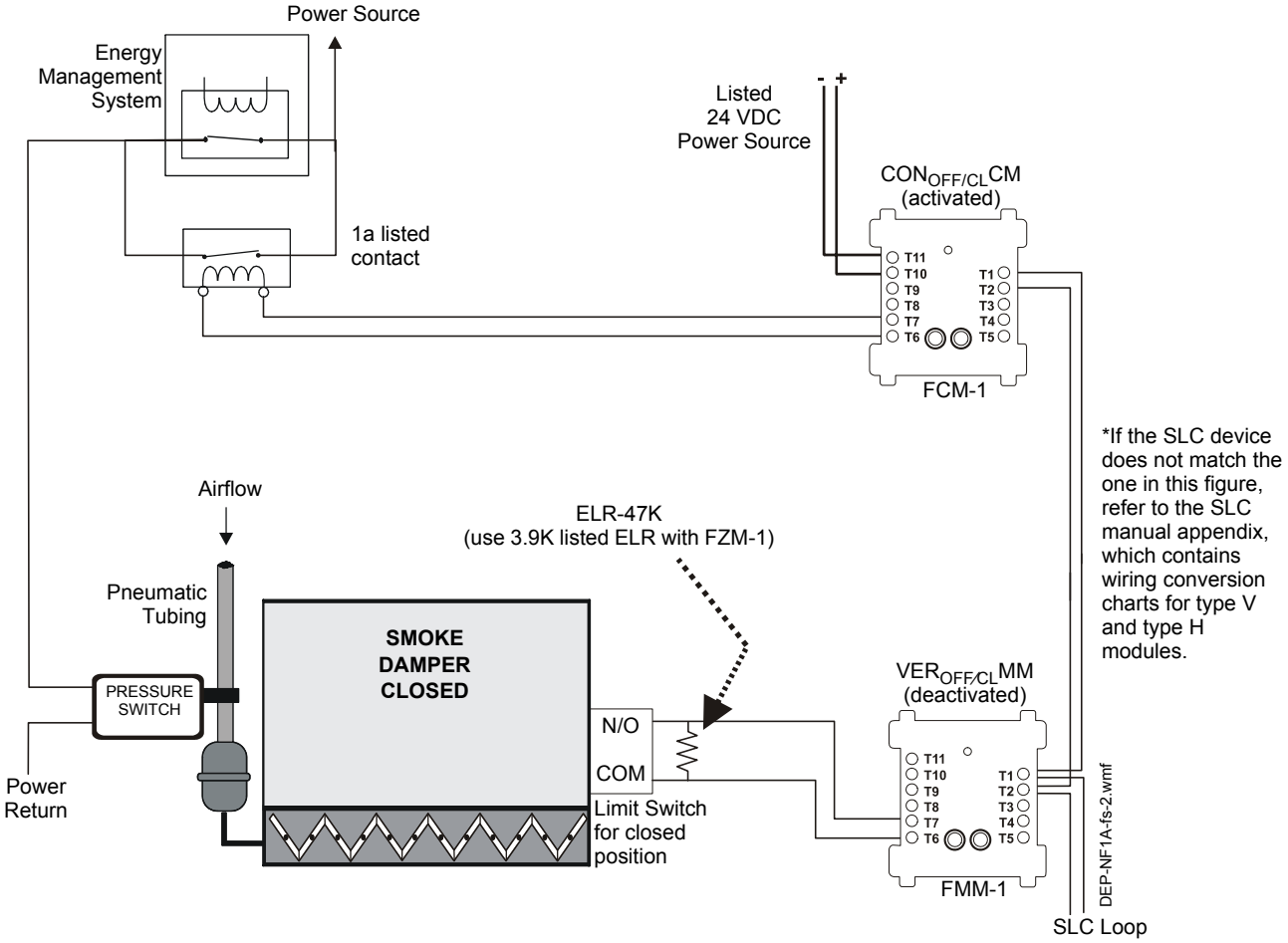

Figure 5.32 EP Damper Control, Non-dedicated System - FSCS Switch Group Type 1

Figure 5.32 depicts an EP damper in a non-dedicated system with the capability of CLOSED control and verification of the CLOSED state, switch group type 1. In the above configuration, the $CON_{OFF/CL}CM$ is activated. The $CON_{OFF/CL}CM$ controls a normally open contactor for the pressure switch power line. When the $CON_{OFF/CL}CM$ is activated, the normally open contactor is closed. When the contactor closes, power is supplied to the pressure switch, which cuts the airflow to the damper and closes it. When the $CON_{OFF/CL}CM$ is deactivated, the EMS is free to control the damper. The EMS is currently being overridden by the $CON_{OFF/CL}CM$.

When power is supplied to the pressure switch, the damper closes. When the damper completely closes, the damper closed limit switch is CLOSED, indicating that the damper is in the CLOSED position. The $VER_{OFF/CL}MM$ monitors the CLOSED position of the damper closed limit switch. In this case the $VER_{OFF/CL}MM$ is activated because the damper is CLOSED.

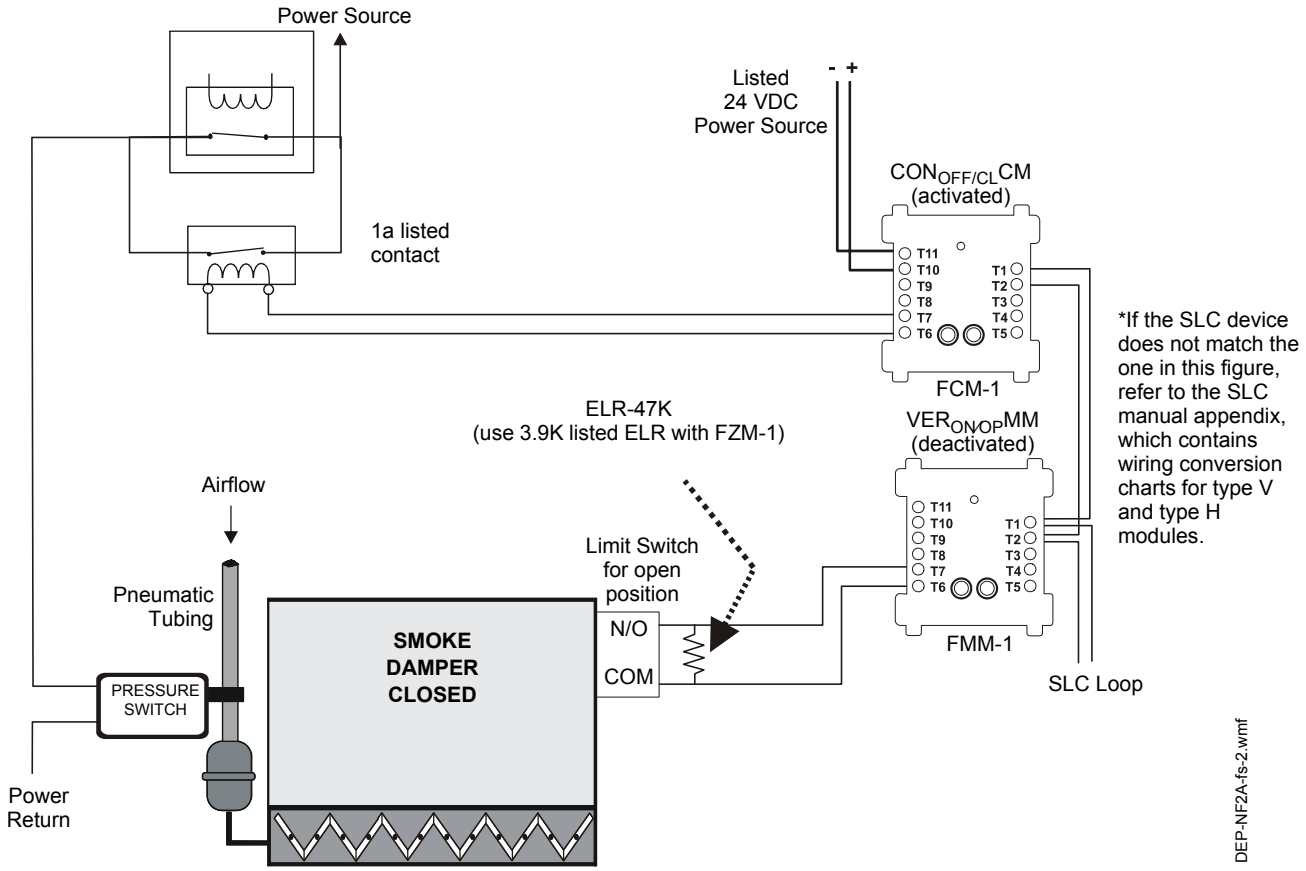

Figure 5.33 EP Damper Control, Non-dedicated System - FSCS Switch Group Type 2

Figure 5.33 depicts an EP damper in a non-dedicated system with the capability of CLOSED control and verification of the OPEN state, switch group type 2. In the above configuration, the $CON_{OFF/CL}CM$ is activated. The $CON_{OFF/CL}CM$ controls a normally open contactor for the pressure switch power line. When the $CON_{OFF/CL}CM$ is activated, the normally open contactor is closed. When the contactor closes, power is supplied to the pressure switch, which cuts the airflow to the damper and closes it. When the $CON_{OFF/CL}CM$ is deactivated, the EMS is free to control the damper. The EMS is currently being overridden by the $CON_{OFF/CL}CM$.

When power is supplied to the pressure switch, the damper closes. When the damper completely closes, the damper closed limit switch is CLOSED, indicating that the damper is in the CLOSED position. The $VER_{ON/OP}MM$ monitors the CLOSED position of the damper closed limit switch. In this case the $VER_{ON/OP}MM$ is deactivated because the damper is CLOSED.

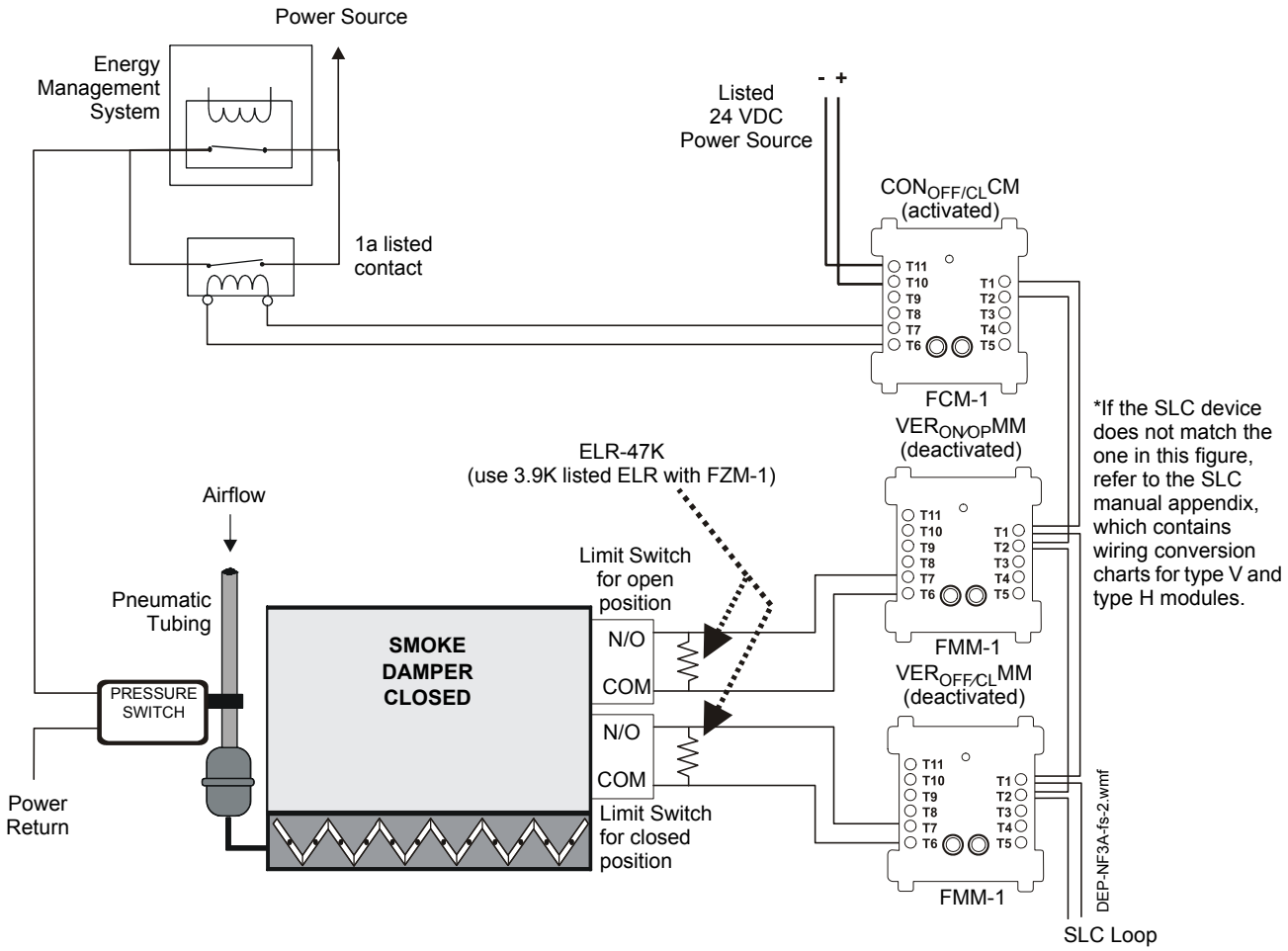

Figure 5.34 EP Damper Control, Non-dedicated System - FSCS Switch Group Type 3

Figure 5.34 depicts an EP damper in a non-dedicated system with the capability of CLOSED control and verification of the OPEN and CLOSED state, switch group type 3. In the above configuration, the $CON_{OFF/CL}CM$ is activated. The $CON_{OFF/CL}CM$ controls a normally open contactor for the pressure switch power line. When the $CON_{OFF/CL}CM$ is activated, the normally open contactor is closed. When the contactor closes, power is supplied to the pressure switch, which cuts the airflow to the damper and closes it. When the $CON_{OFF/CL}CM$ is deactivated, the EMS is free to control the damper. The EMS is currently being overridden by the $CON_{OFF/CL}CM$.

When power is supplied to the pressure switch, the damper closes. When the damper completely closes, the damper closed limit switch is CLOSED and the damper open limit switch is OPEN, indicating that the damper is in the CLOSED position. The $VER_{OFF/CL}MM$ monitors the CLOSED position of the damper closed limit switch and the $VER_{ON/OP}MM$ monitors the CLOSED position of the damper open limit switch. In this case the $VER_{OFF/CL}MM$ is activated and the $VER_{ON/OP}MM$ is deactivated because the damper is CLOSED.

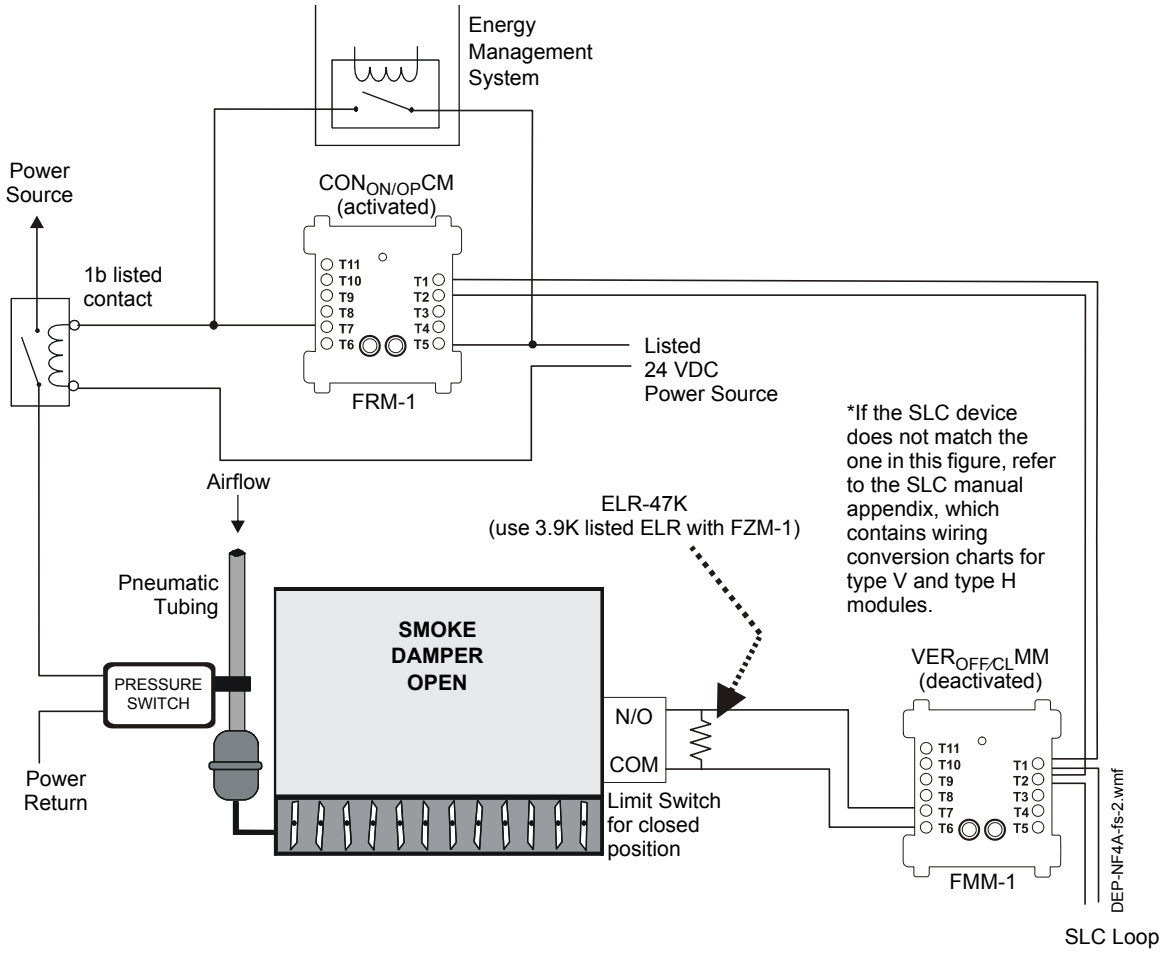

Figure 5.35 EP Damper Control, Non-dedicated System - FSCS Switch Group Type 4

Figure 5.35 depicts an EP damper in a non-dedicated system with the capability of OPEN control and verification of the CLOSED state, switch group type 4. In the above configuration, the $CON_{ON/OP}CM$ is activated. The $CON_{ON/OP}CM$ controls a normally closed contactor for the pressure switch power line. When $CON_{ON/OP}CM$ is activated, the normally closed contactor is opened. When the contactor opens, power is cut from the pressure switch, which allows airflow to open the damper. When the $CON_{ON/OP}CM$ is deactivated, the EMS is free to control the damper. The EMS is currently being overridden by the $CON_{ON/OP}CM$.

When power is cut from the pressure switch, the damper opens. When the damper completely opens, the damper open limit switch is CLOSED and the damper closed limit switch is OPEN, indicating that the damper is in the OPEN position. The $VER_{OFF/CL}MM$ monitors the CLOSED position of the limit switch. In this case the $VER_{OFF/CL}MM$ is deactivated because the damper is OPEN.

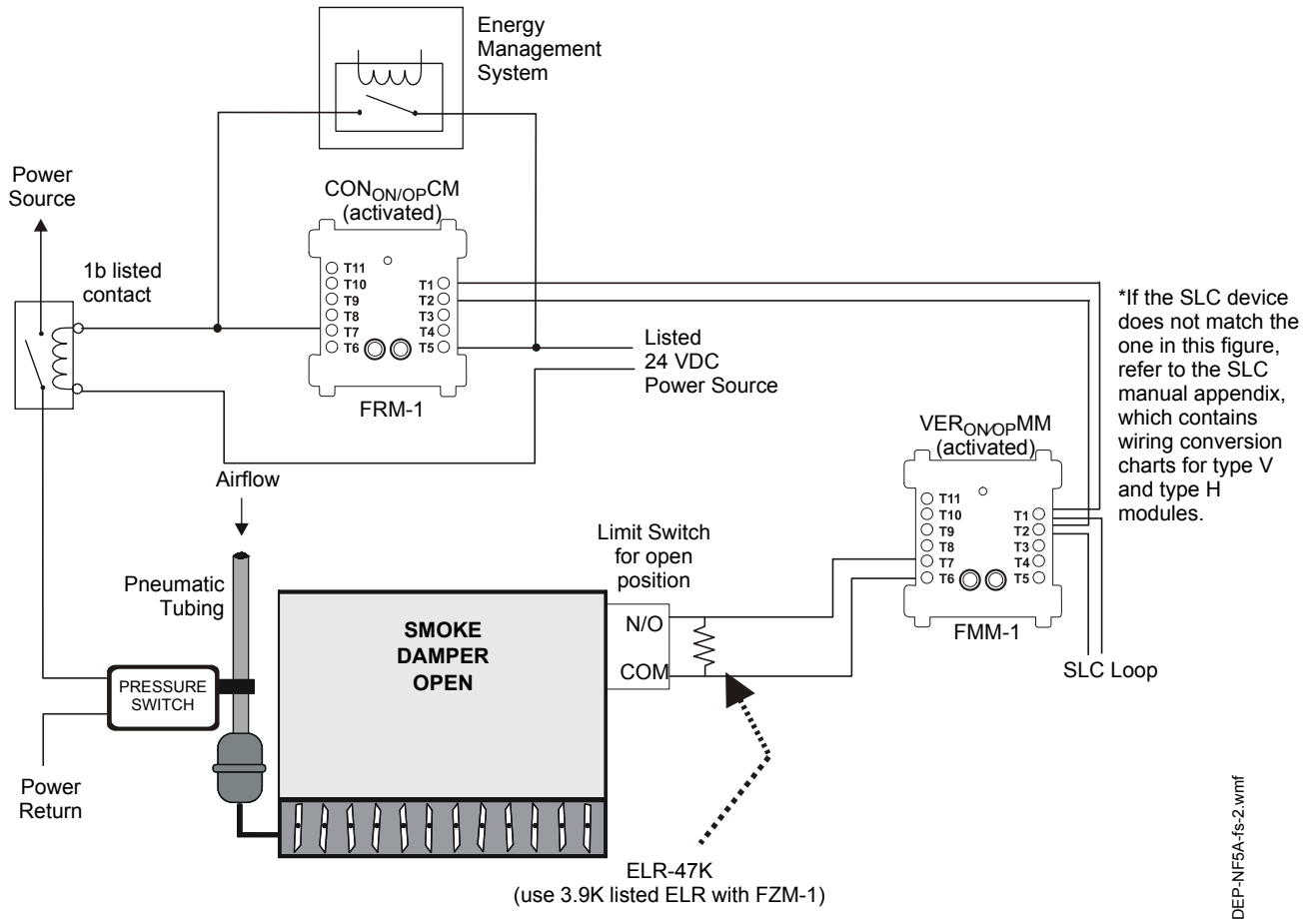

Figure 5.36 EP Damper Control, Non-dedicated System - FSCS Switch Group Type 5

Figure 5.36 depicts an EP damper in a non-dedicated system with the capability of OPEN control and verification of the OPEN state, switch group type 5. In the above configuration, the $CON_{ON/OP}CM$ is activated. The $CON_{ON/OP}CM$ controls a normally closed contactor for the pressure switch power line. When the $CON_{ON/OP}CM$ is activated, the normally closed contactor is opened. When the contactor opens, power is cut from the pressure switch, which allows airflow to open the damper. When the $CON_{ON/OP}CM$ is deactivated, the EMS is free to control the damper. The EMS is currently being overridden by the $CON_{ON/OP}CM$.

When power is cut from the pressure switch, the damper opens. When the damper completely opens, the damper open limit switch is CLOSED and the damper closed limit switch is OPEN, indicating that the damper is in the OPEN position. The $VER_{ON/OP}MM$ monitors the CLOSED position of the damper open limit switch. In this case the $VER_{ON/OP}MM$ is activated because the damper is OPEN.

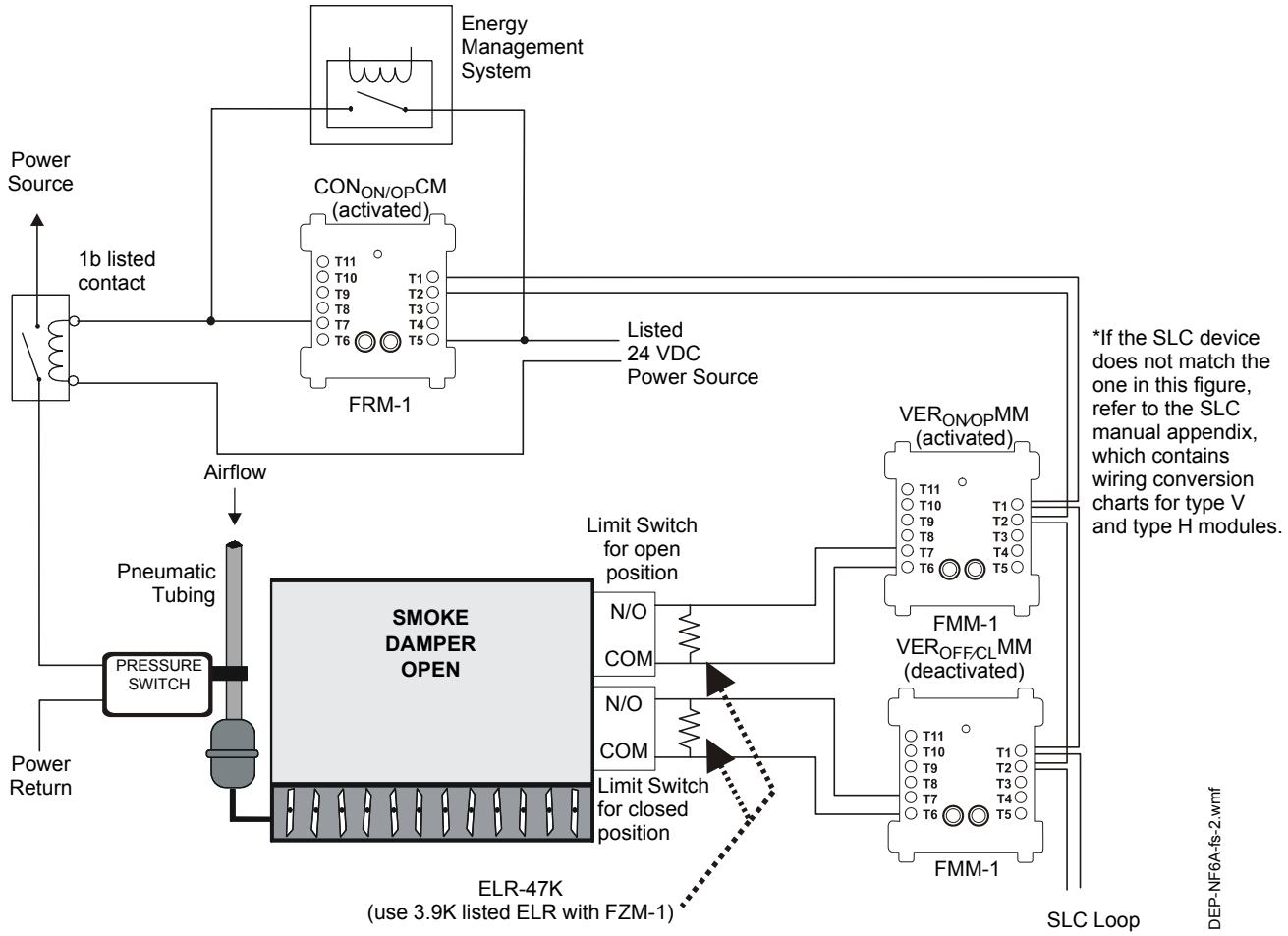

Figure 5.37 EP Damper Control, Non-dedicated System - FSCS Switch Group Type 6

Figure 5.37 depicts an EP damper in a non-dedicated system with the capability of OPEN control and verification of the OPEN and CLOSED state, switch group type 6. In the above configuration, the $CON_{ON/OP}CM$ is activated. The $CON_{ON/OP}CM$ controls a normally closed contactor for the pressure switch power line. When the $CON_{ON/OP}CM$ is activated, the normally closed contactor is opened. When the contactor opens, power is cut from the pressure switch which allows airflow to open the damper. When the $CON_{ON/OP}CM$ is deactivated, the EMS is free to control the damper. The EMS is currently being overridden by the $CON_{ON/OP}CM$.

When power is cut from the pressure switch, the damper opens. When the damper completely opens, the damper open limit switch is CLOSED and the damper closed limit switch is OPEN, indicating that the damper is in the OPEN position. The $VER_{ON/OP}MM$ monitors the CLOSED position of the damper open limit switch and the $VER_{OFF/CL}MM$ monitors the CLOSED position of the damper closed limit switch. In this case the $VER_{ON/OP}MM$ is activated and the $VER_{OFF/CL}MM$ is deactivated because the damper is OPEN.

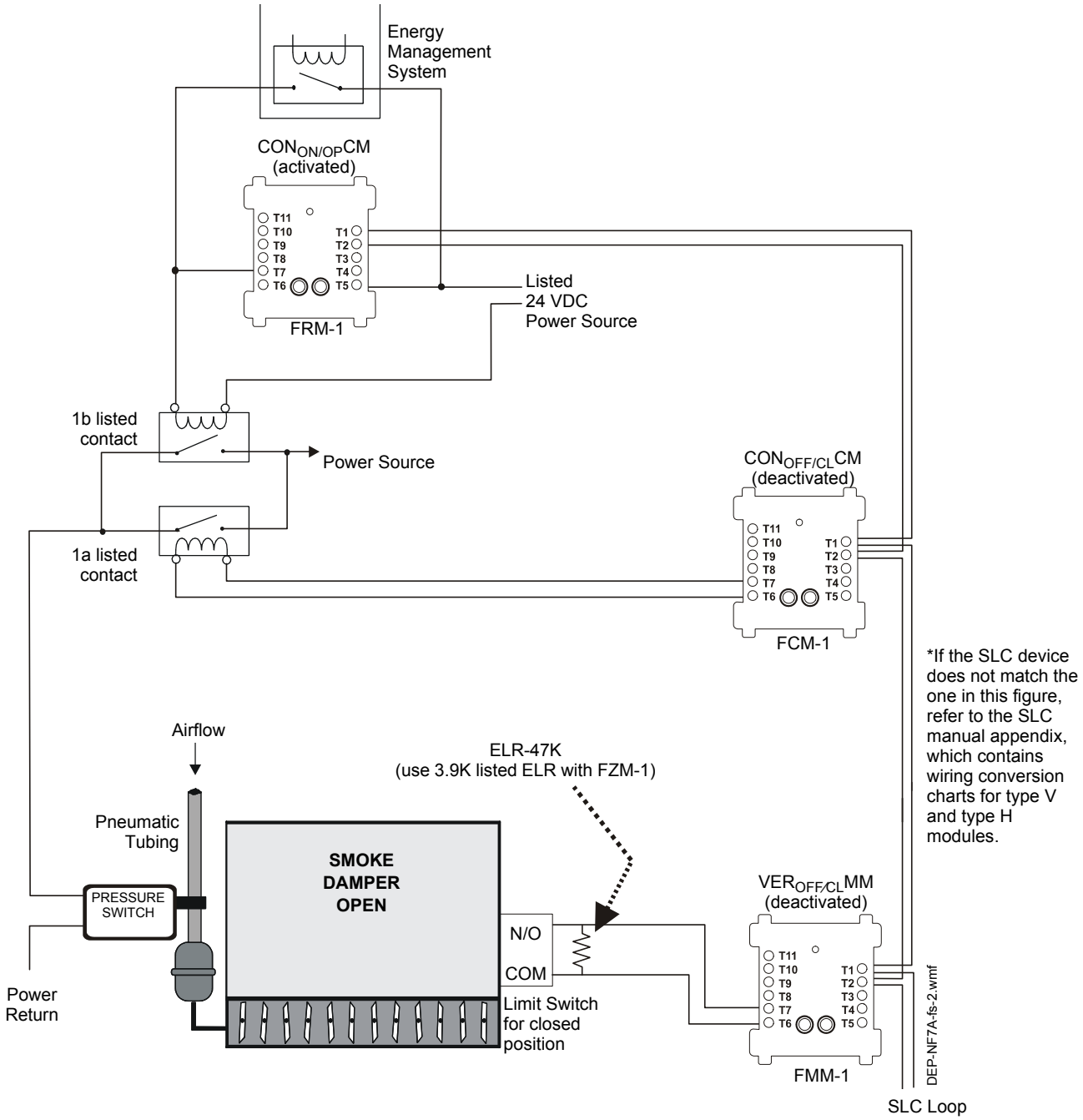

Figure 5.38 EP Damper Control, Non-dedicated System - FSCS Switch Group Type 7

Figure 5.38 depicts an EP damper in a non-dedicated system with the capability of OPEN and CLOSED control and verification of the CLOSED state, switch group type 7. In the above configuration, the $CON_{ON/OP}CM$ is activated and the $CON_{OFF/CL}CM$ is deactivated. The $CON_{ON/OP}CM$ controls a normally closed contactor for the pressure switch power line. When the $CON_{ON/OP}CM$ is activated, the normally closed contactor is opened. When the contactor opens, power is cut from the pressure switch, which allows airflow to open the damper. When the $CON_{ON/OP}CM$ is deactivated, the EMS is free to control the damper. The EMS is currently being overridden by the $CON_{ON/OP}CM$.

When power is cut from the pressure switch, the damper opens. When the damper completely opens, the damper open limit switch is CLOSED and the damper closed limit switch is OPEN, indicating that the damper is in the OPEN position. The $VER_{OFF/CL}MM$ monitors the CLOSED position of the damper closed limit switch. In this case the $VER_{OFF/CL}MM$ is deactivated because the damper is OPEN.

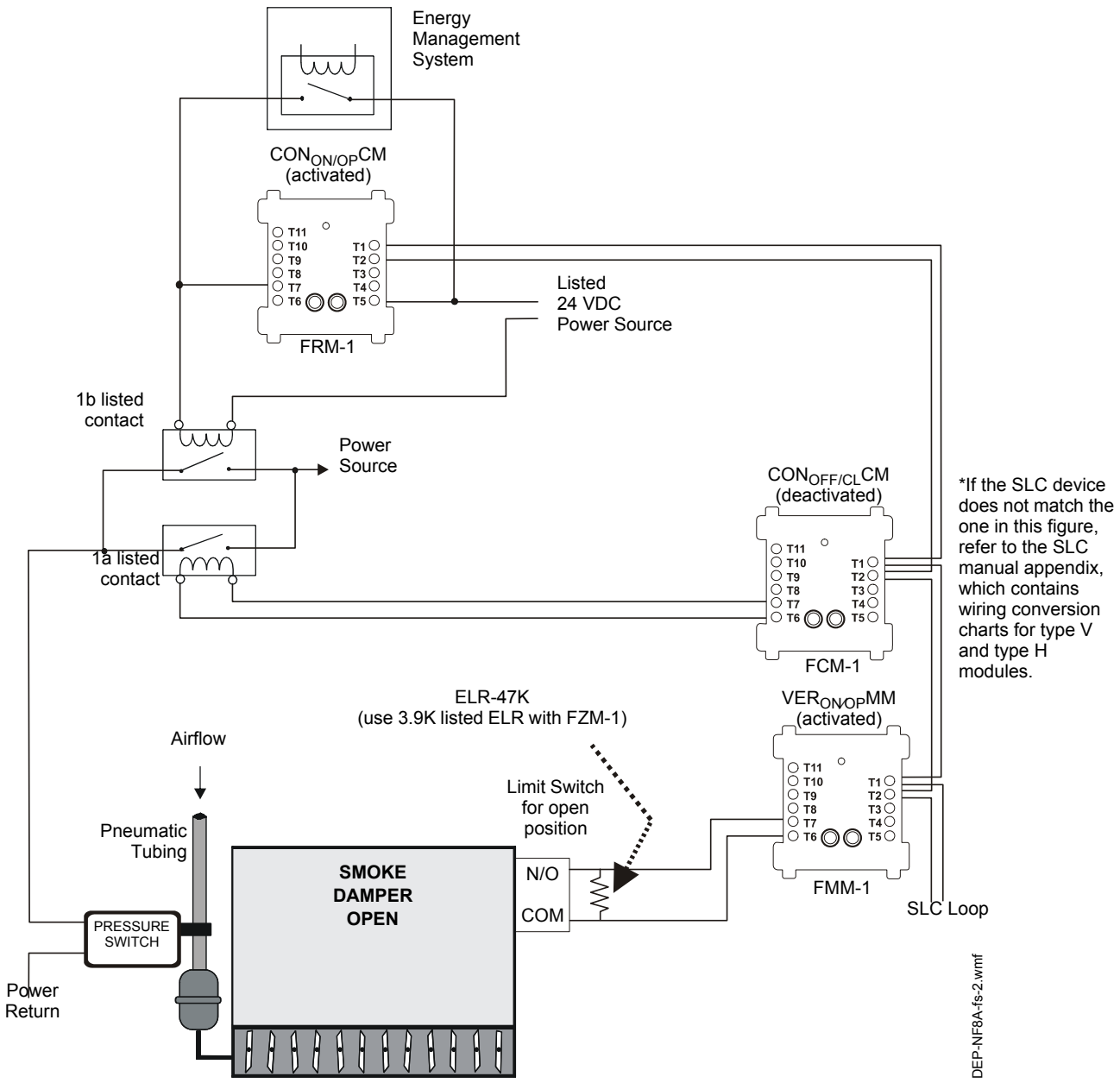

Figure 5.39 EP Damper Control, Non-dedicated System - FSCS Switch Group Type 8

Figure 5.39 depicts an EP damper in a non-dedicated system with the capability of OPEN and CLOSED control and verification of the OPEN state, switch group type 8. In the above configuration, the $CON_{ON/OP}CM$ is activated and the $CON_{OFF/CL}CM$ is deactivated. The $CON_{ON/OP}CM$ controls a normally closed contactor for the pressure switch power line. When the $CON_{ON/OP}CM$ is activated, the normally closed contactor is opened. When the contactor opens, power is cut from the pressure switch, which allows airflow to open the damper. When the $CON_{ON/OP}CM$ is deactivated, the EMS is free to control the damper. The EMS is currently being overridden by the $CON_{ON/OP}CM$.

When power is cut from the pressure switch, the damper opens. When the damper completely opens, the damper open limit switch is CLOSED, indicating that the damper is in the OPEN position. The $VER_{ON/OP}MM$ monitors the CLOSED position of the damper closed limit switch. In this case the $VER_{ON/OP}MM$ is activated because the damper is OPEN.

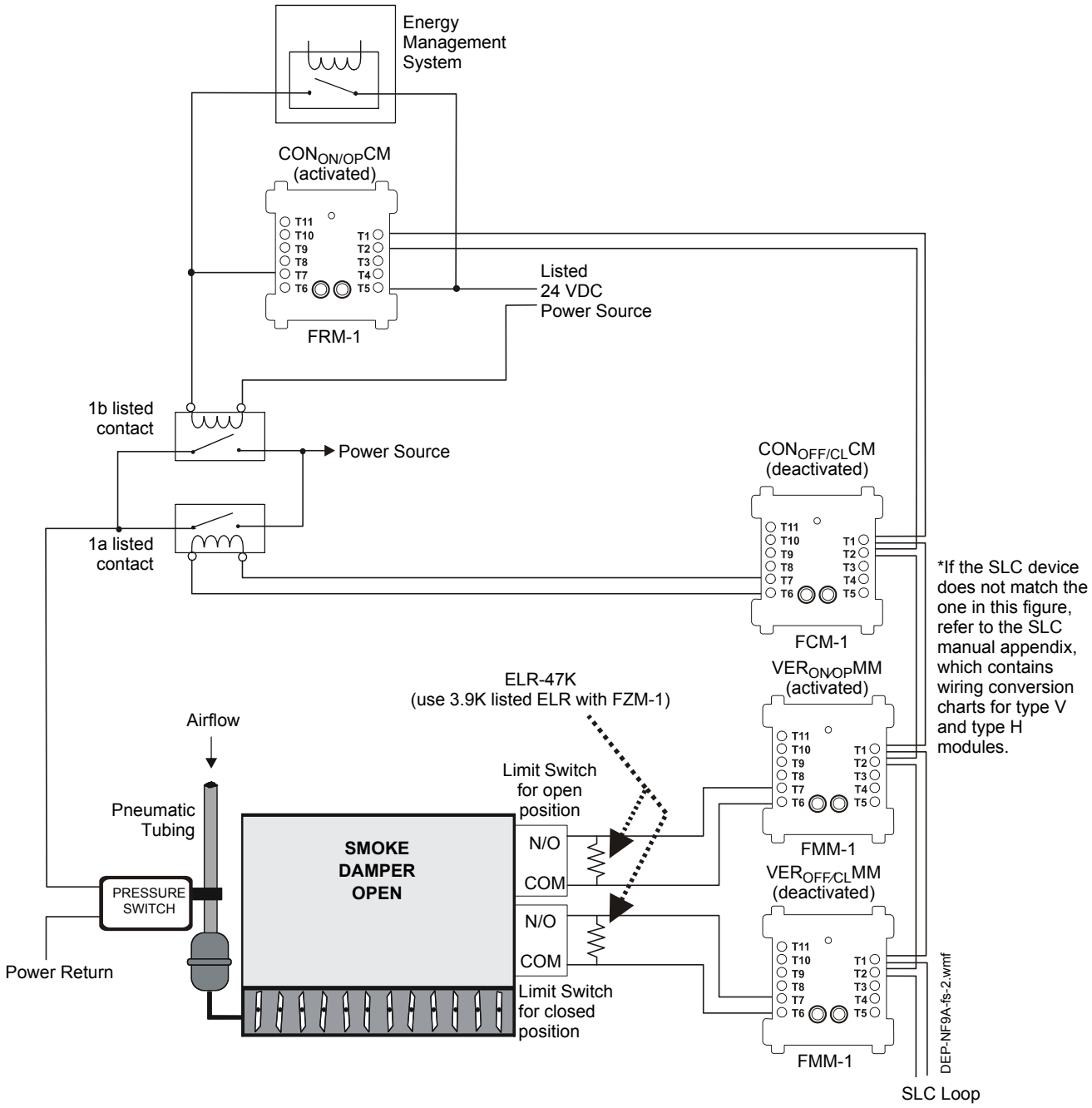

Figure 5.40 EP Damper Control, Non-dedicated System - FSCS Switch Group Type 9

Figure 5.40 depicts an EP damper in a non-dedicated system with the capability of OPEN and CLOSED control and verification of the OPEN and CLOSED state, switch group type 9. In the above configuration, the $CON_{ON/OP}CM$ is activated and the $CON_{OFF/CL}CM$ is deactivated. The $CON_{ON/OP}CM$ controls a normally closed contactor for the pressure switch power line. When the $CON_{ON/OP}CM$ is activated, the normally closed contactor is opened. When the contactor opens, power is cut from the pressure switch, which allows airflow to open the damper. When the $CON_{ON/OP}CM$ is deactivated, the EMS is free to control the damper. The EMS is currently being overridden by the $CON_{ON/OP}CM$.

When power is cut from the pressure switch, the damper opens. When the damper completely opens, the damper open limit switch is CLOSED and the damper closed limit switch is OPEN, indicating that the damper is in the OPEN position. The $VER_{ON/OP}MM$ monitors the CLOSED position of the damper open limit switch and the $VER_{OFF/CL}MM$ monitors the CLOSED position of the damper closed limit switch. In this case the $VER_{ON/OP}MM$ is activated and the $VER_{OFF/CL}MM$ is deactivated because the damper is OPEN.

5.5 HVAC Wiring Diagrams

5.5.1 Fans

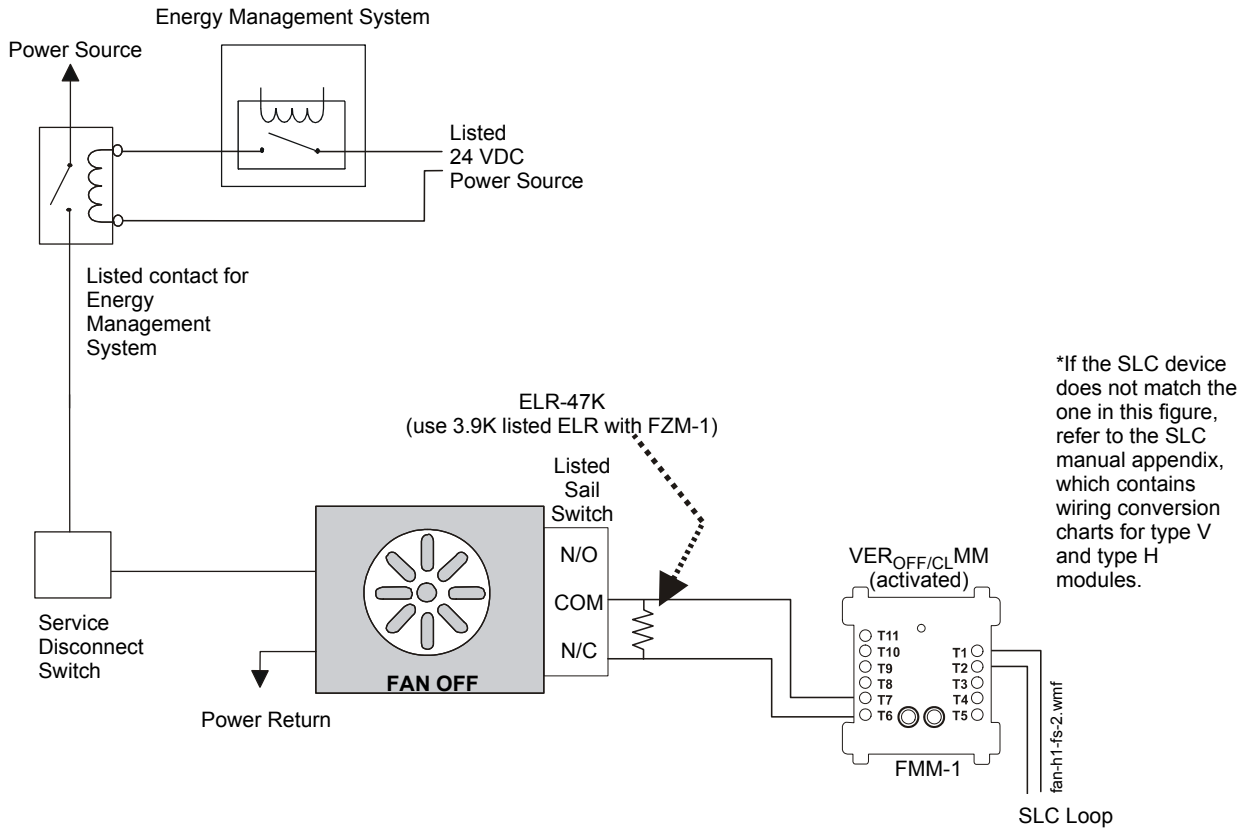

Figure 5.41 Fan Control - HVAC Switch Group Type 1

Figure 5.41 depicts a fan in an HVAC system with the capability of verifying the OFF state, switch group type 1. In the above configuration, the EMS is deactivated. The EMS controls a normally closed contactor which switches power to the fan. When power is not being supplied to the fan, the fan is OFF and the sail switch is CLOSED, indicating no airflow in the duct. The $VER_{OFF/CL}MM$ monitors the CLOSED position of the sail switch, which would indicate when the fan is OFF. In this case the $VER_{OFF/CL}MM$ is activated because the fan is OFF and the sail switch is CLOSED.

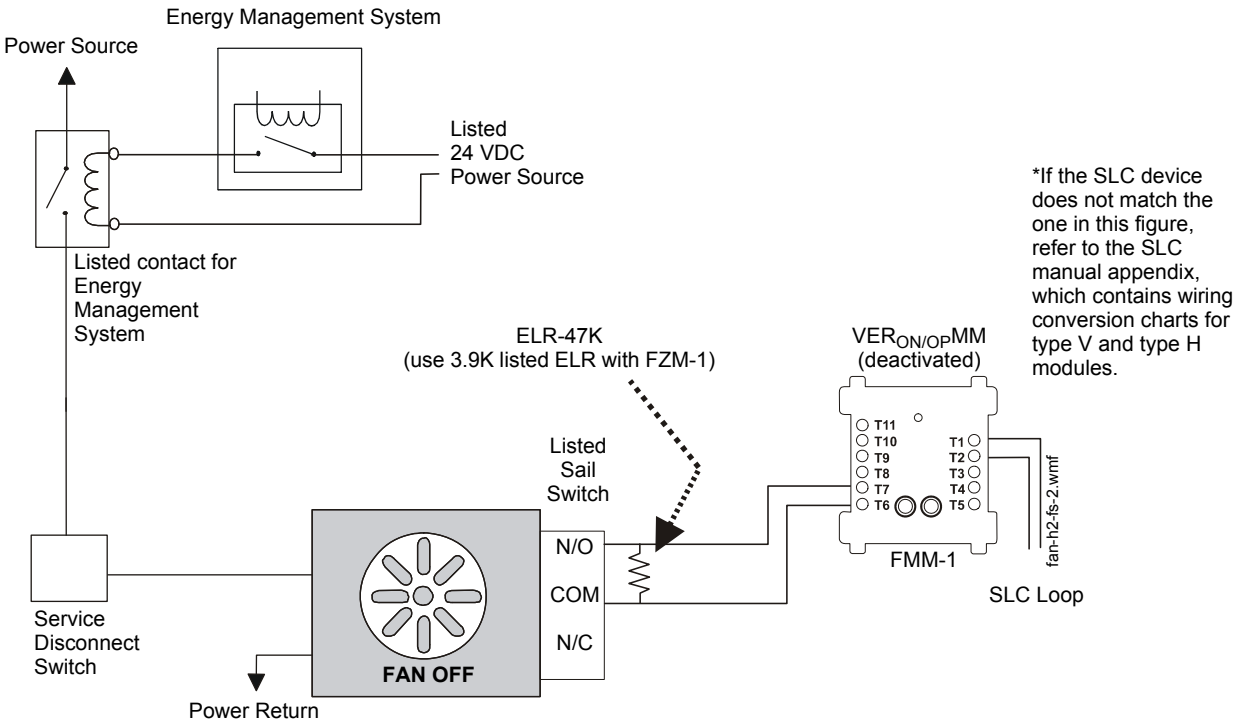

Figure 5.42 Fan Control - HVAC Switch Group Type 2

Figure 5.42 depicts a fan in an HVAC system with the capability of verifying the ON state, switch group type 2. In the above configuration, the EMS is deactivated. The EMS controls a normally closed contactor which switches power to the fan. When no power is supplied to the fan, the fan is OFF and the sail switch is CLOSED, indicating no airflow in the duct. The $VER_{ON/OP}MM$ monitors the OPEN position of the sail switch, which would indicate when the fan is ON. In this case the $VER_{ON/OP}MM$ is deactivated because the fan is OFF and the sail switch is CLOSED.

Switch group type 3 is for a fan that would require the capability of verifying both the ON and OFF states. Since it is possible to determine this information from either switch group type 1 or switch group type 2, switch group type 3 would only be necessary for redundancy in verifying the state of the fan. For example, if switch group type 1 is used instead of switch group type 3, the OFF state of the fan would be verified when the MM is activated and the ON state of the fan would be verified when the monitor module is deactivated. Utilizing switch group types 1 or 2 also saves the use of an additional monitor module. Switch group type 3 would use two monitor modules to provide the same verification as types 1 or 2.

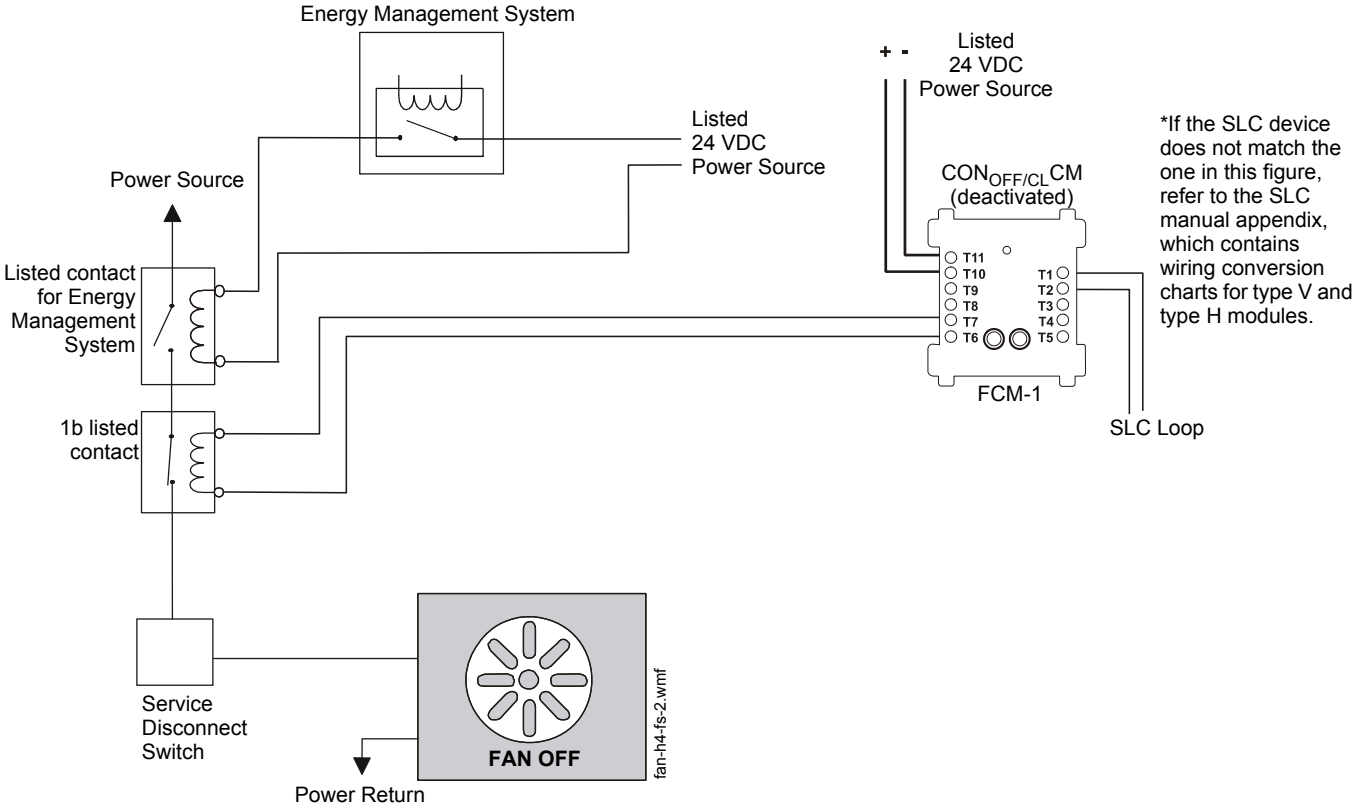

Figure 5.43 Fan Control - HVAC Switch Group Type 4

Figure 5.43 depicts a fan in an HVAC system with the capability of OFF control, switch group type 4. In the above configuration, the $CON_{OFF/CL}CM$ is deactivated. The $CON_{OFF/CL}CM$ controls a normally closed contactor which switches power to the fan (the contactor is used when the power being switched is greater than 24 volts). When the $CON_{OFF/CL}CM$ is deactivated, the contactor is closed, thus allowing the EMS to freely control the fan. In this case the EMS is OFF, so no power is being supplied to the fan. When no power is supplied to the fan, the fan is OFF. When the $CON_{OFF/CL}CM$ is activated, the normally closed contactor opens, thus cutting any power to the fan that was being supplied by the EMS.

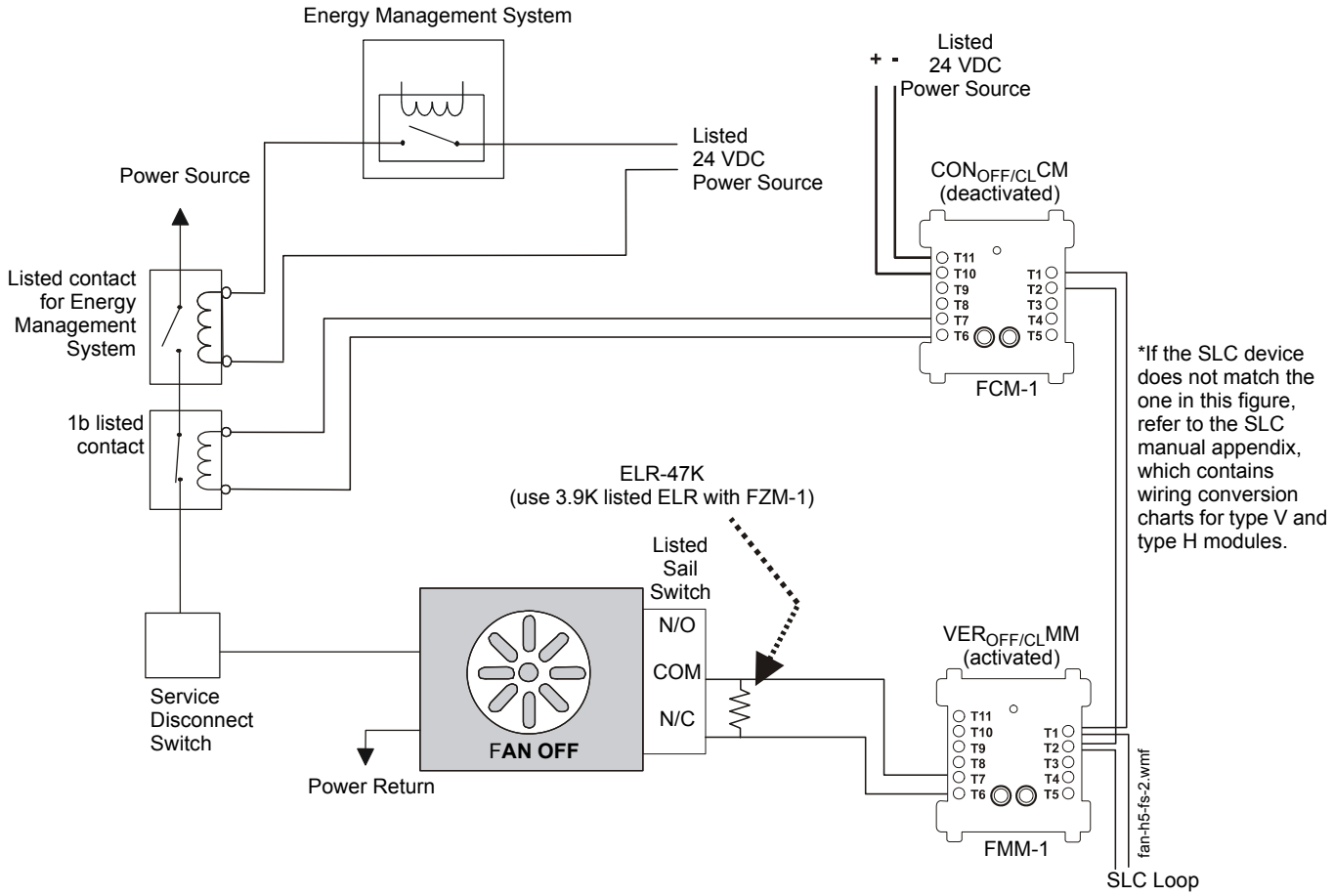

Figure 5.44 Fan Control - HVAC Switch Group Type 5

Figure 5.44 depicts a fan in an HVAC system with the capability of OFF control and verification of the OFF state, switch group type 5. In the above configuration, the $CON_{OFF/CL}CM$ is deactivated. The $CON_{OFF/CL}CM$ controls a normally closed contactor that switches power to the fan (the contactor is used when the power being switched is greater than 24 volts). When the $CON_{OFF/CL}CM$ is deactivated, the contactor is closed, thus allowing the EMS to freely control the fan. In this case the EMS is OFF, so no power is being supplied to the fan. When no power is supplied to the fan, the fan is OFF and the sail switch is CLOSED, indicating no airflow in the duct. The $VER_{OFF/CL}MM$ monitors the CLOSED position of the sail switch, which would indicate when the fan is OFF. In this case the $VER_{OFF/CL}MM$ is activated because the fan is OFF due to the EMS. When the $CON_{OFF/CL}CM$ is activated, the normally closed contactor opens, thus cutting any power to the fan that was being supplied by the EMS.

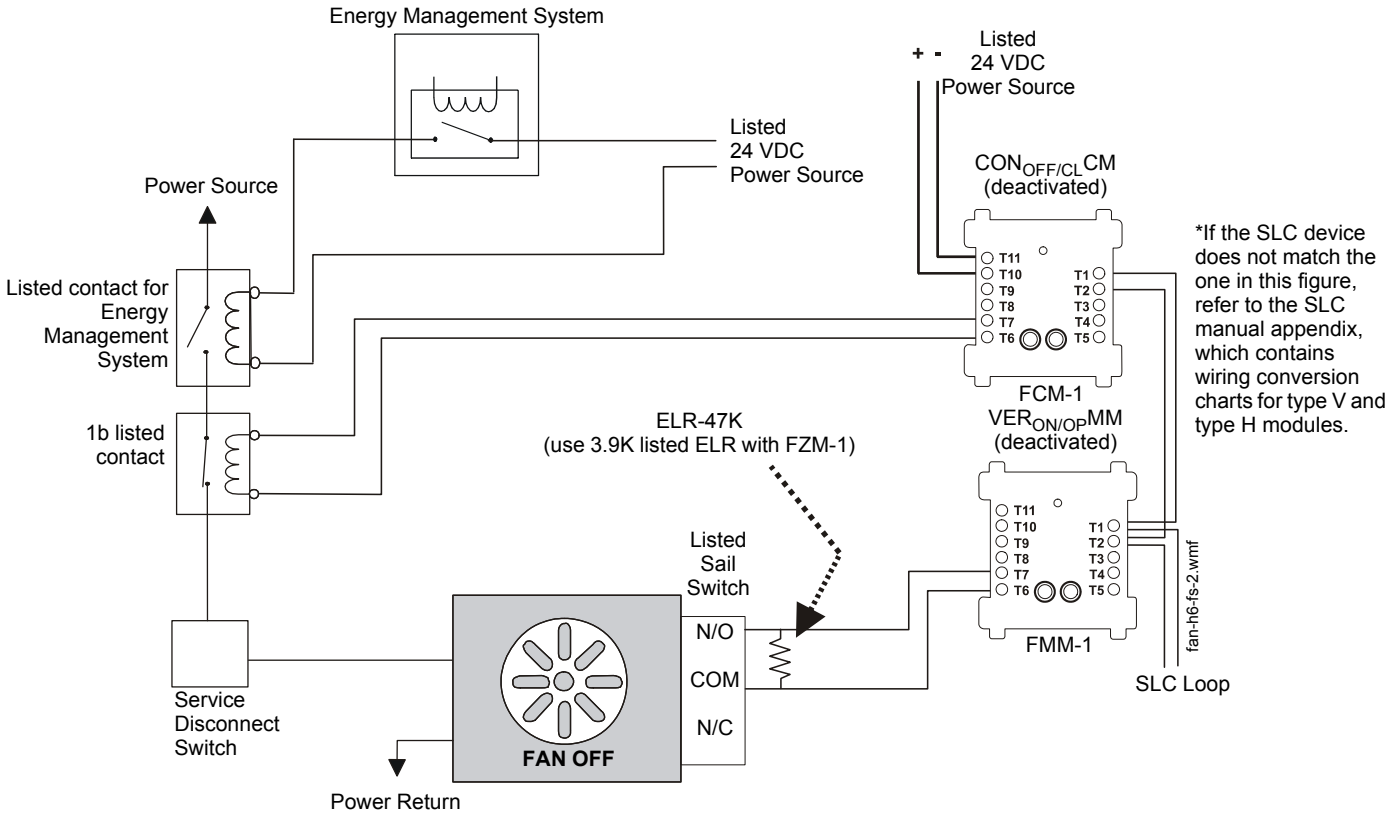

Figure 5.45 Fan Control - HVAC Switch Group Type 6

Figure 5.45 depicts a fan in an HVAC system with the capability of OFF control and verification of the ON state, switch group type 6. In the above configuration, the $CON_{OFF/CL}CM$ is deactivated. The $CON_{OFF/CL}CM$ controls a normally closed contactor which switches power to the fan (the contactor is used when the power being switched is greater than 24 volts). When the $CON_{OFF/CL}CM$ is deactivated, the contactor is closed, thus allowing the EMS to freely control the fan. In this case the EMS is OFF, so no power is being supplied to the fan. When no power is supplied to the fan, the fan is OFF and the sail switch is CLOSED, indicating no airflow in the duct. The $VER_{ON/OP}MM$ monitors the OPEN position of the sail switch, which would indicate when the fan is ON. In this case the $VER_{ON/OP}MM$ is deactivated because the fan is OFF due to the EMS. When the $CON_{OFF/CL}CM$ is activated, the normally closed contactor opens, thus cutting any power to the fan that was being supplied by the EMS.

Switch group type 7 is for a fan that would require the capability of OFF control and verification of both the ON and OFF states. Since it is possible to determine this information from either switch group type 5 or switch group type 6, switch group type 7 would only be necessary for redundancy in verifying the state of the fan. For example, if switch group type 5 were used instead of switch group type 7, the OFF state of the fan would be verified when the monitor module is activated and the ON state of the fan would be verified when the monitor is deactivated. Utilizing switch group types 5 or 6 also saves the use of an additional monitor module. Switch group type 7 would use two monitor modules to provide the same verification as types 5 or 6.

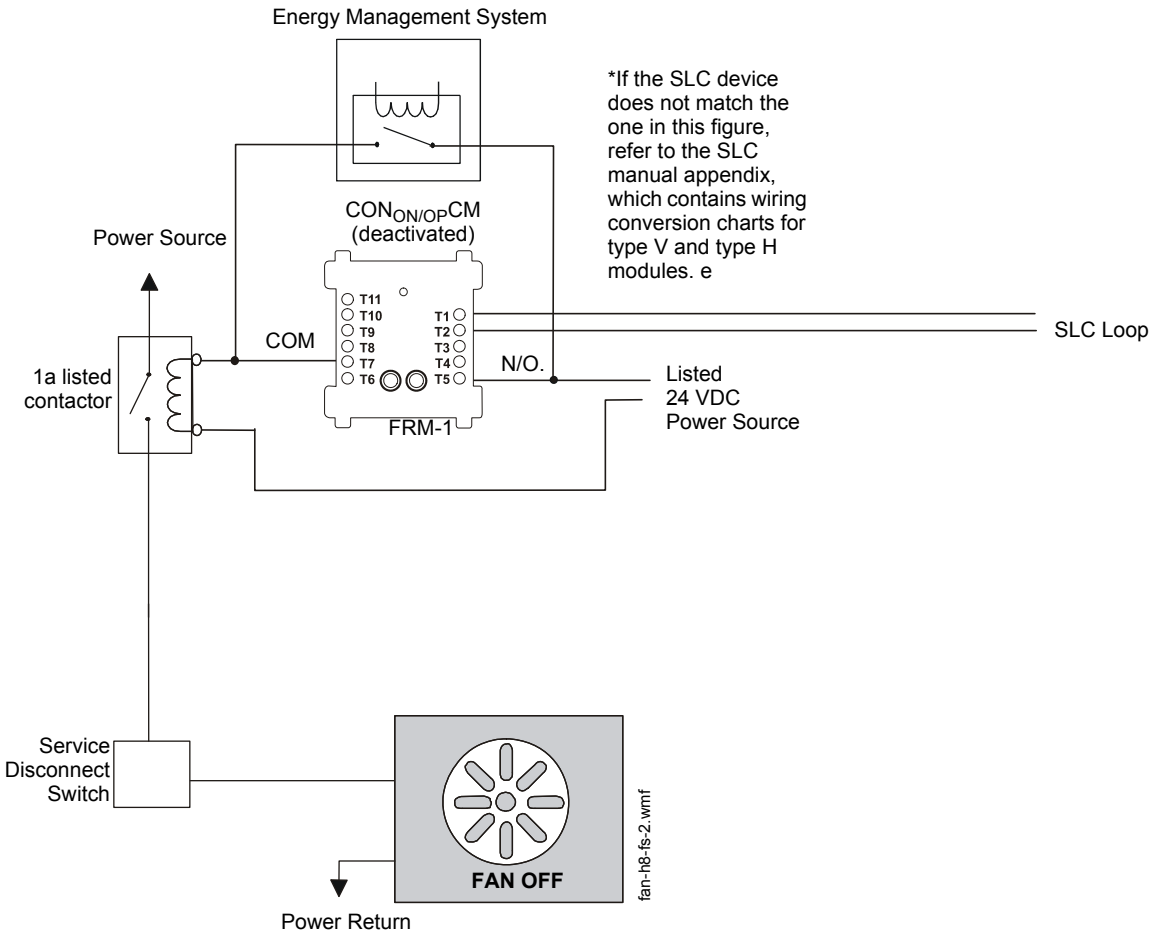

Figure 5.46 Fan Control - HVAC Switch Group Type 8

Figure 5.46 depicts a fan in an HVAC system with the capability of ON control, switch group type 8. In the above configuration, the $CON_{ON/OP}$ CM is deactivated. The $CON_{ON/OP}$ CM is wired in parallel with the EMS. (When wired in parallel with the EMS, use a relay module.) When the $CON_{ON/OP}$ CM is deactivated, the EMS is free to control the fan. In this case the EMS is OFF, so no power is being supplied to the fan. When no power is supplied to the fan, the fan is OFF. When the $CON_{ON/OP}$ CM is activated, the $CON_{ON/OP}$ CM overrides whatever state the EMS is in and closes the normally open contactor, thus supplying power to the fan and turning it on.

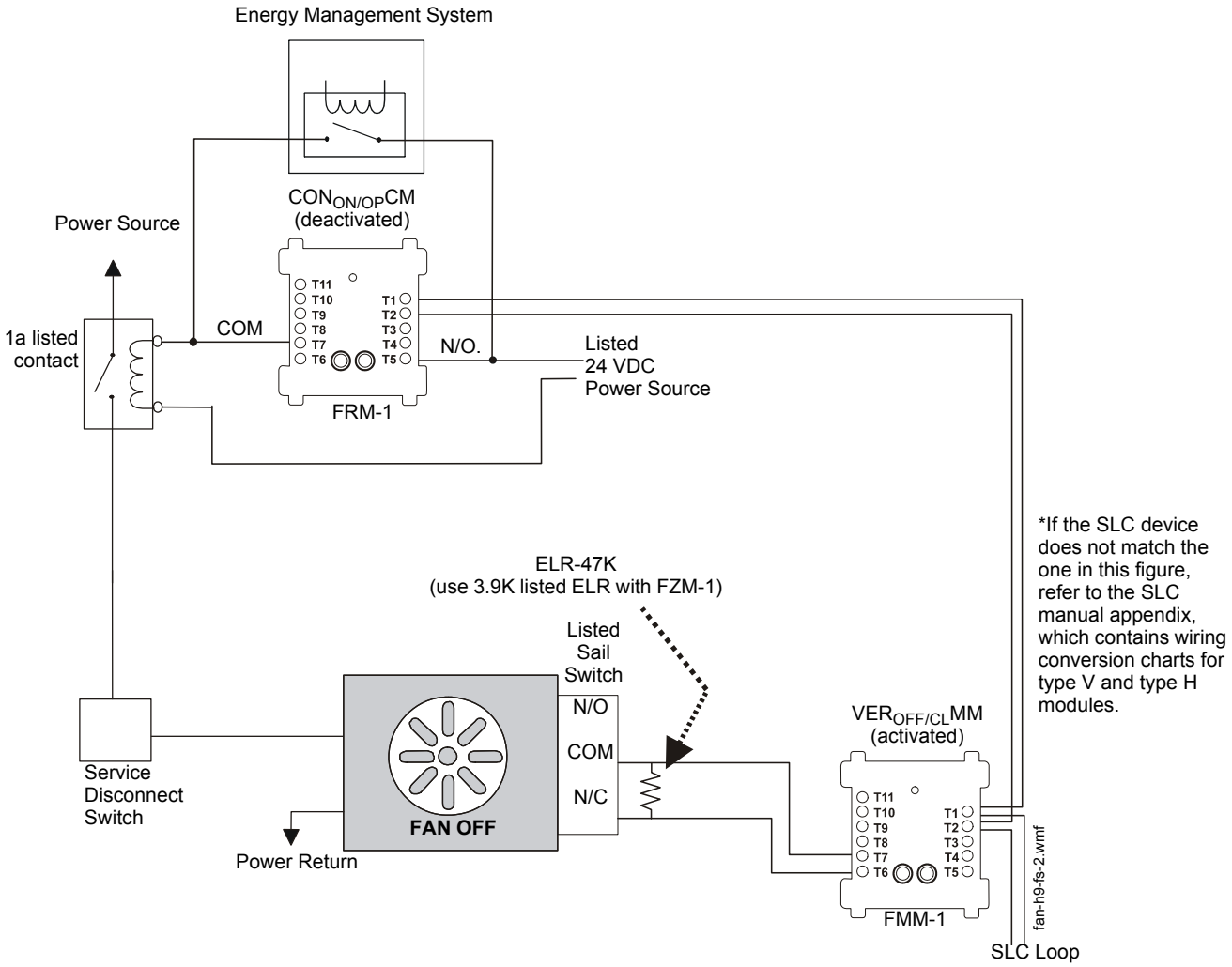

Figure 5.47 Fan Control - HVAC Switch Group Type 9

Figure 5.47 depicts a fan in an HVAC system with the capability of ON control and verification of the OFF state, switch group type 9. In the above configuration, the $CON_{ON/OP}$ CM is deactivated. The $CON_{ON/OP}$ CM is wired in parallel with the EMS; when wired in parallel with the EMS the CM must be a relay module. When the $CON_{ON/OP}$ CM is deactivated, the EMS is free to control the fan. In this case the EMS is OFF, so no power is being supplied to the fan. When no power is supplied to the fan, the fan is OFF and the sail switch is CLOSED, indicating no airflow in the duct. The $VER_{OFF/CL}$ MM monitors the CLOSED position of the sail switch, which would indicate when the fan is OFF. In this case the $VER_{OFF/CL}$ MM is activated because the fan is OFF due to the EMS. When the $CON_{ON/OP}$ CM is activated, the $CON_{ON/OP}$ CM overrides whatever state the EMS is in and closes the normally open contactor, thus supplying power to the fan and turning it on.

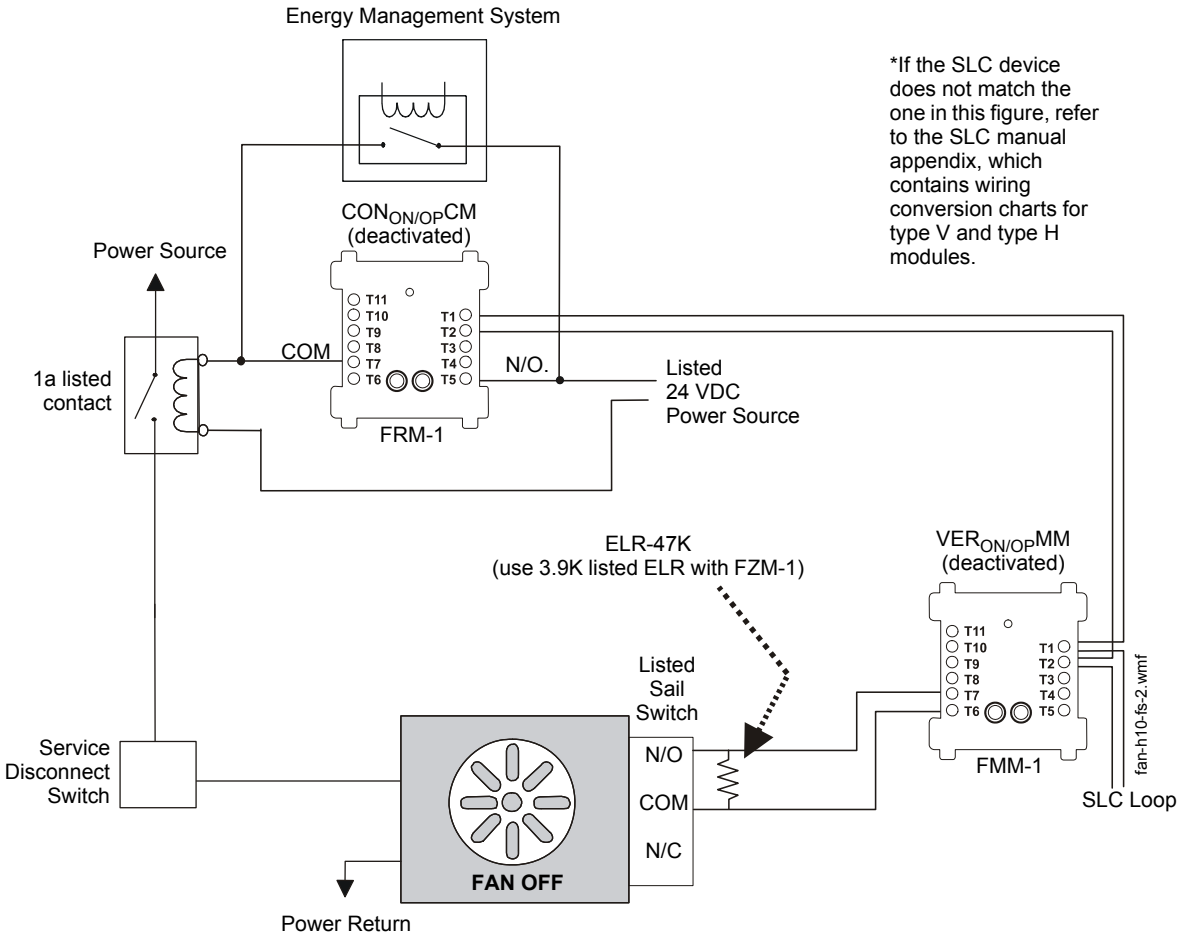

Figure 5.48 Fan Control - HVAC Switch Group Type 10

Figure 5.48 depicts a fan in an HVAC system with the capability of ON control and verification of the ON state, switch group type 10. In the above configuration, the $CON_{ON/OP}CM$ is deactivated. The $CON_{ON/OP}CM$ is wired in parallel with the EMS; when wired in parallel with the EMS the CM must be a relay module. When the $CON_{ON/OP}CM$ is deactivated, the EMS is free to control the fan. In this case the EMS is OFF, so no power is being supplied to the fan. When no power is supplied to the fan, the fan is OFF and the sail switch is CLOSED, indicating no airflow in the duct. The $VER_{ON/OP}MM$ monitors the OPEN position of the sail switch, which would indicate when the fan is ON. In this case the $VER_{ON/OP}MM$ is deactivated because the fan is OFF due to the EMS. When the $CON_{ON/OP}CM$ is activated, the $CON_{ON/OP}CM$ overrides whatever state the EMS is in and closes the normally open contactor, thus supplying power to the fan and turning it ON.

Switch group type 11 is for a fan that would require the capability of ON control and verification of both the ON and OFF states. Since it is possible to determine this information from either switch group type 9 or switch group type 10, switch group type 11 would only be necessary for redundancy in verifying the state of the fan. For example, if switch group type 9 is used instead of switch group type 11, the OFF state of the fan would be verified when the module is activated and the ON state of the fan would be verified when the monitor module is deactivated. Utilizing switch group types 9 or 10 also saves the use of an additional monitor module. Switch group type 11 would use two monitor modules to provide the same verification as types 9 or 10.

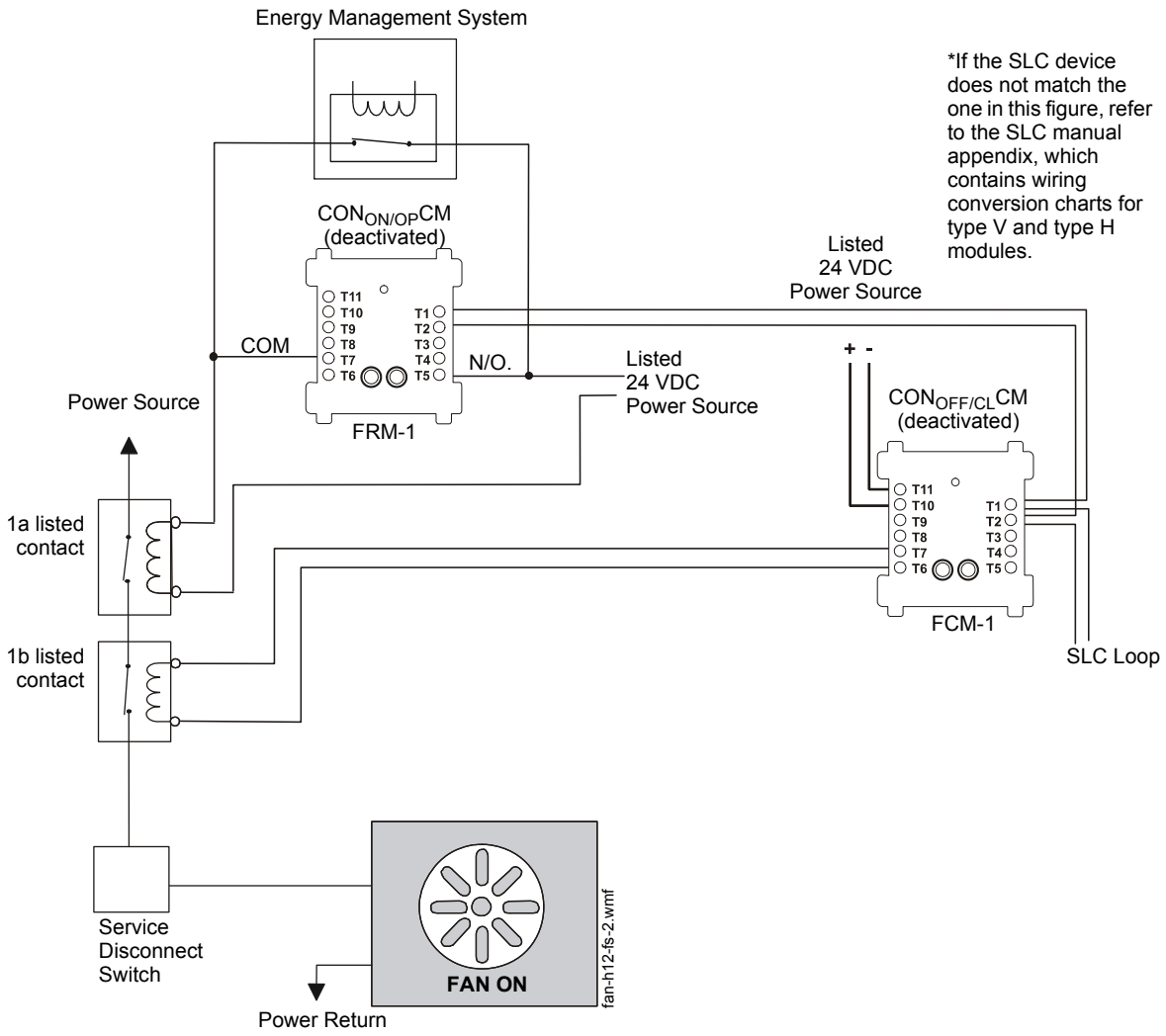

Figure 5.49 Fan Control - HVAC Switch Group Type 12

Figure 5.49 depicts a fan in an HVAC system with the capability of ON and OFF control, switch group type 12. In the above configuration, the $CON_{ON/OP}CM$ is deactivated and the $CON_{OFF/CL}CM$ is deactivated. These two control modules are always in the opposite state when the smoke control system is in operation and are always deactivated during normal operation. The $CON_{ON/OP}CM$ is wired in parallel with the EMS; when wired in parallel with the EMS the CM must be a relay module. When the $CON_{ON/OP}CM$ and the $CON_{OFF/CL}CM$ are deactivated, the EMS is free to control the fan. In this case the EMS is ON, so power is being supplied to the fan. When the $CON_{ON/OP}CM$ is activated for smoke control, the $CON_{ON/OP}CM$ overrides whatever state the EMS is in and closes the normally open contactor, thus supplying power to the fan and turning it ON. When the $CON_{OFF/CL}CM$ is activated for smoke control, the $CON_{OFF/CL}CM$ opens the normally closed contactor and turns the fan OFF, overriding whatever state the EMS is in.

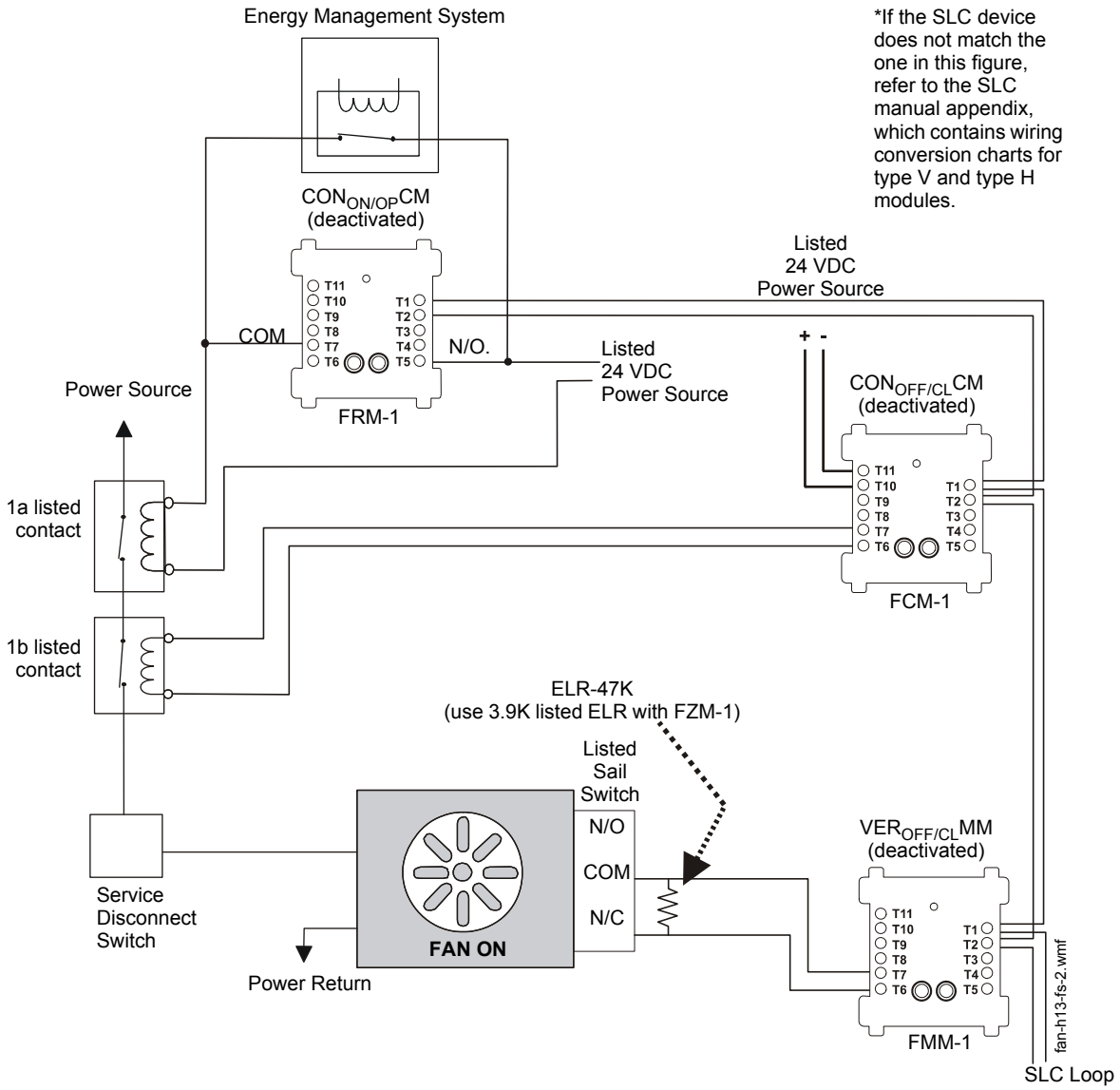

Figure 5.50 Fan Control - HVAC Switch Group Type 13

Figure 5.50 depicts a fan in an HVAC system with the capability of ON and OFF control and verification of the OFF state, switch group type 13. In the above configuration, the $CON_{ON/OP}CM$ is deactivated and the $CON_{OFF/CL}CM$ is deactivated. These two control modules are always in the opposite state when the smoke control system is in operation and are always deactivated during normal operation. The $CON_{ON/OP}CM$ is wired in parallel with the EMS; when wired in parallel with the EMS the CM must be a relay module. When the $CON_{ON/OP}CM$ and the $CON_{OFF/CL}CM$ are deactivated, the EMS is free to control the fan. In this case the EMS is ON, so power is being supplied to the fan. When power is supplied to the fan, the fan is ON and the sail switch is OPEN, indicating airflow in the duct. The $VER_{OFF/CL}MM$ monitors the CLOSED position of the sail switch, which would indicate when the fan is OFF.

In this case the $VER_{OFF/CL}MM$ is deactivated because the fan is ON due to the EMS. When the $CON_{ON/OP}CM$ is activated for smoke control, the $CON_{ON/OP}CM$ overrides whatever state the EMS is in and closes the normally open contactor, thus supplying power to the fan and turning it ON. When the $CON_{OFF/CL}CM$ is activated for smoke control, the $CON_{OFF/CL}CM$ opens the normally closed contactor and turns the fan OFF, overriding whatever state the EMS is in.

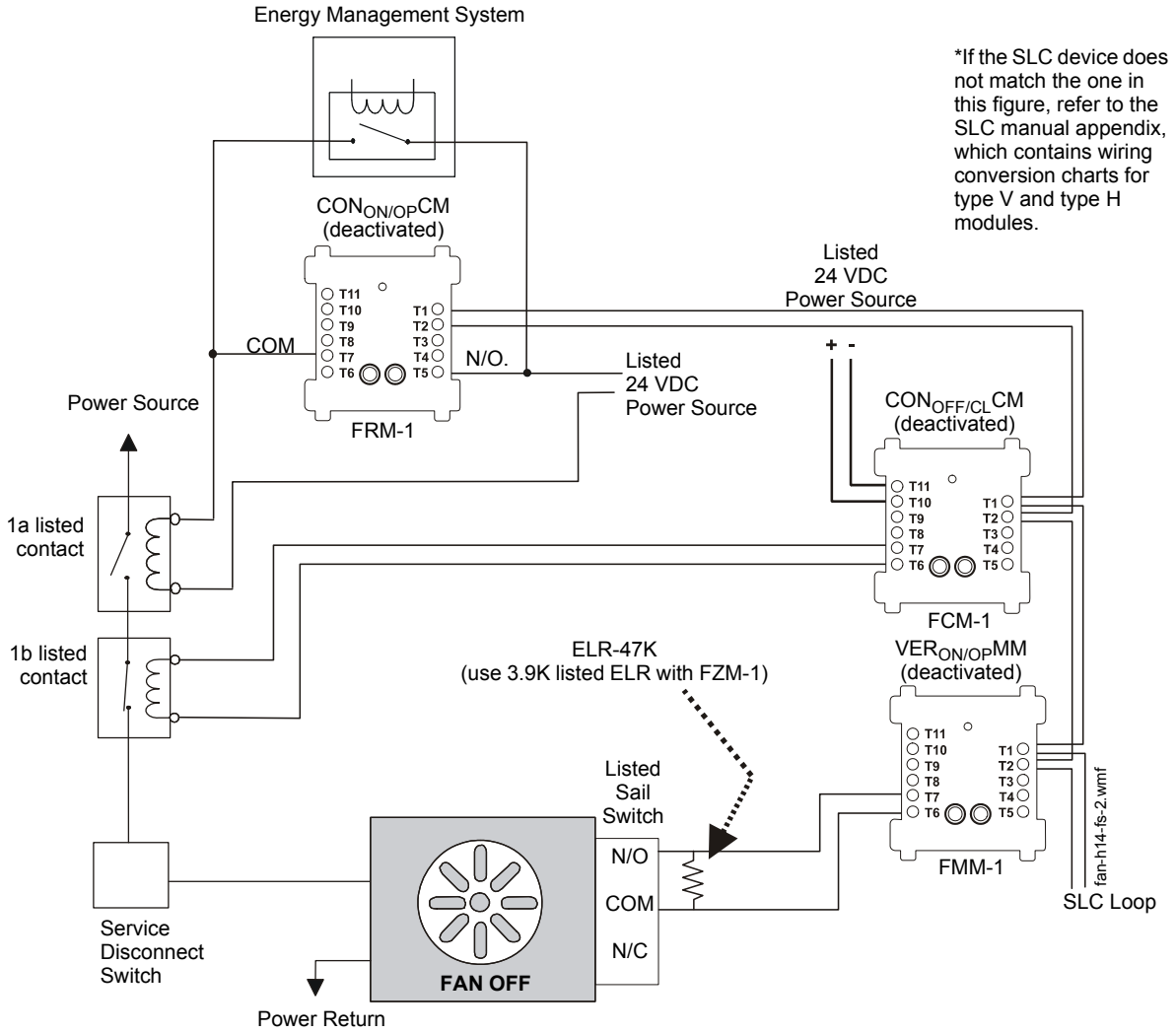

Figure 5.51 Fan Control - HVAC Switch Group Type 14

Figure 5.51 depicts a fan in an HVAC system with the capability of ON and OFF control and verification of the ON state, switch group type 14. In the above configuration, the $CON_{ON/OP}CM$ is deactivated and the $CON_{OFF/CL}CM$ is deactivated. These two control modules are always in the opposite state when the smoke control system is in operation and are always deactivated during normal operation. The $CON_{ON/OP}CM$ is wired in parallel with the EMS; when wired in parallel with the EMS the CM must be a relay module. When the $CON_{ON/OP}CM$ and the $CON_{OFF/CL}CM$ are deactivated, the EMS is free to control the fan. In this case the EMS is OFF, so no power is being supplied to the fan. When no power is supplied to the fan, the fan is OFF and the sail switch is CLOSED, indicating no airflow in the duct. The $VER_{ON/OP}MM$ monitors the OPEN position of the sail switch, which would indicate when the fan is ON. In this case the $VER_{ON/OP}MM$ is deactivated because the fan is OFF due to the EMS. When the $CON_{ON/OP}CM$ is activated for smoke control, the $CON_{ON/OP}CM$ overrides whatever state the EMS is in and closes the normally open contactor, thus supplying power to the fan and turning it ON. When the $CON_{OFF/CL}CM$ is activated for smoke control, the $CON_{OFF/CL}CM$ opens the normally closed contactor and turns the fan OFF, overriding whatever state the EMS is in.

Type 15 is used for ON and OFF control and verification of the ON and OFF state. Since it is possible to determine both ON and OFF verification from switch group type 13 or switch group type 14, switch group type 15 would only be necessary for redundancy in verifying the state of the fan. For example, if switch group type 13 is used instead of switch group type 14, the OFF state of the fan would be verified when the monitor module is activated and the ON state of the fan would be verified when the monitor module is deactivated. Utilizing switch group types 13 or 14 also saves the use of an additional monitor module. Switch group type 15 would use two monitor modules to provide the same verification as types 13 or 14.

5.5.2 Motorized Dampers

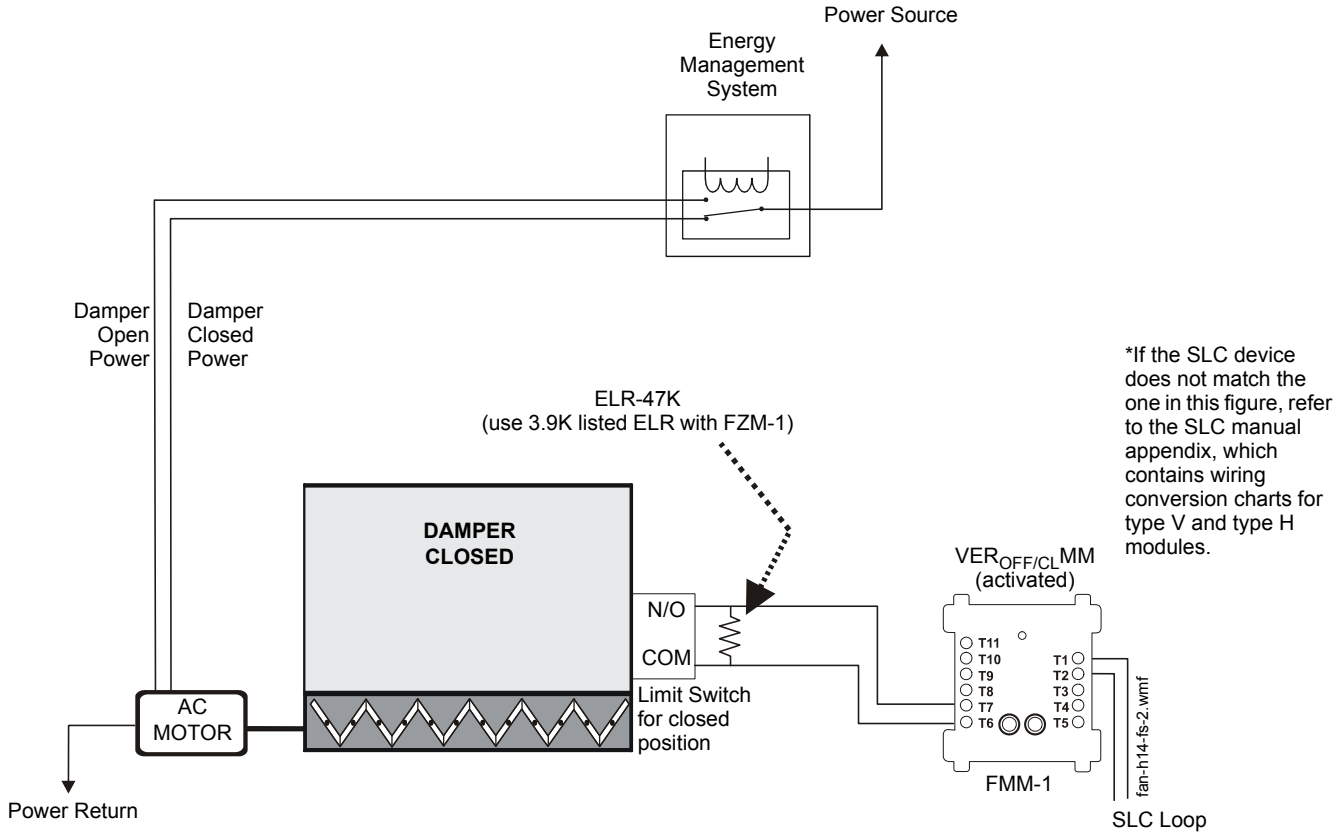

Figure 5.52 Motorized Damper Control - HVAC Switch Group Type 1

Figure 5.52 depicts a motorized damper in an HVAC system with the capability of verification of the CLOSED state, switch group type 1. In the above configuration, the EMS is supplying power to the damper closed power line. When power is supplied to the damper closed power line, the damper closes. When the damper completely closes, the damper closed limit switch is CLOSED, indicating that the damper is in the CLOSED position. The $VER_{OFF/CL}MM$ monitors the CLOSED position of the damper closed limit switch. In this case the $VER_{OFF/CL}MM$ is activated because the damper is CLOSED.

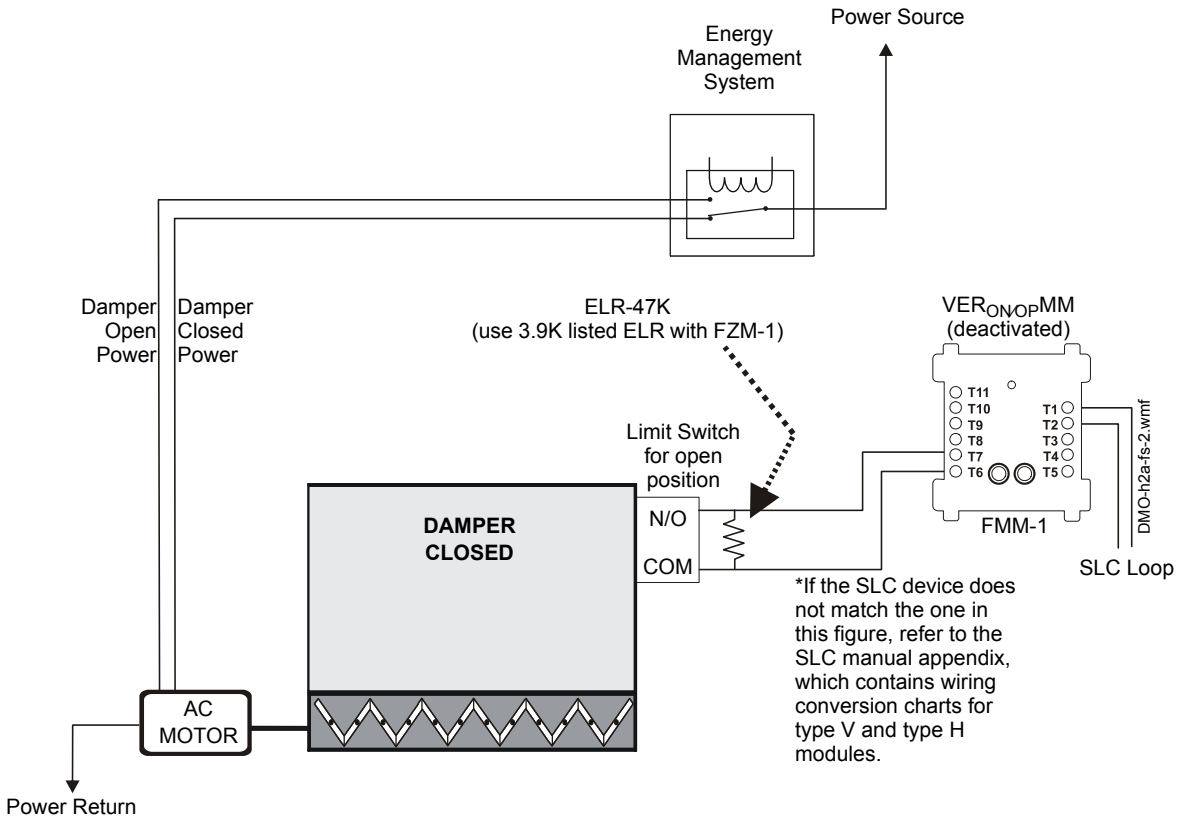

Figure 5.53 Motorized Damper Control - HVAC Switch Group Type 2

Figure 5.53 depicts a motorized damper in an HVAC system with the capability of verification of the OPEN state, switch group type 2. In the above configuration, the EMS is supplying power to the damper closed power line. When power is supplied to the damper closed power line, the damper closes. When the damper completely closes, the damper closed limit switch is CLOSED, indicating that the damper is in the CLOSED position. The $VER_{ON/OP}MM$ monitors the CLOSED position of the damper open limit switch. In this case the $VER_{ON/OP}MM$ is deactivated because the damper is CLOSED.

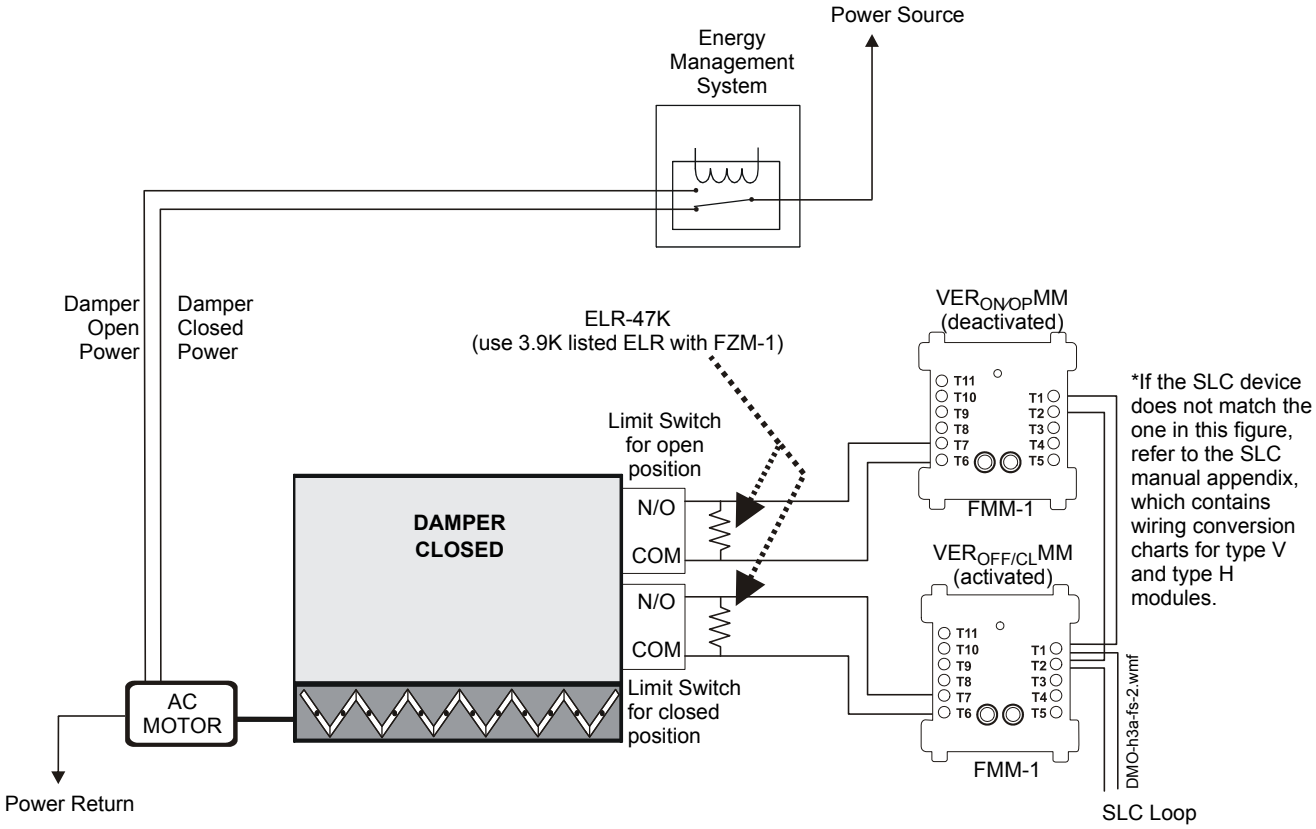

Figure 5.54 Motorized Damper Control - HVAC Switch Group Type 3

Figure 5.54 depicts a motorized damper in an HVAC system with the capability of verification of the OPEN and CLOSED state, switch group type 3. In the above configuration, the EMS is supplying power to the damper closed power line. When power is supplied to the damper closed power line, the damper closes. When the damper completely closes, the damper closed limit switch is CLOSED, indicating that the damper is in the CLOSED position. The $VER_{OFF/CL}MM$ monitors the CLOSED position of the damper closed limit switch and the $VER_{ON/OP}MM$ monitors the CLOSED position of the damper open limit switch. In this case the $VER_{OFF/CL}MM$ is activated and the $VER_{ON/OP}MM$ is deactivated because the damper is CLOSED.

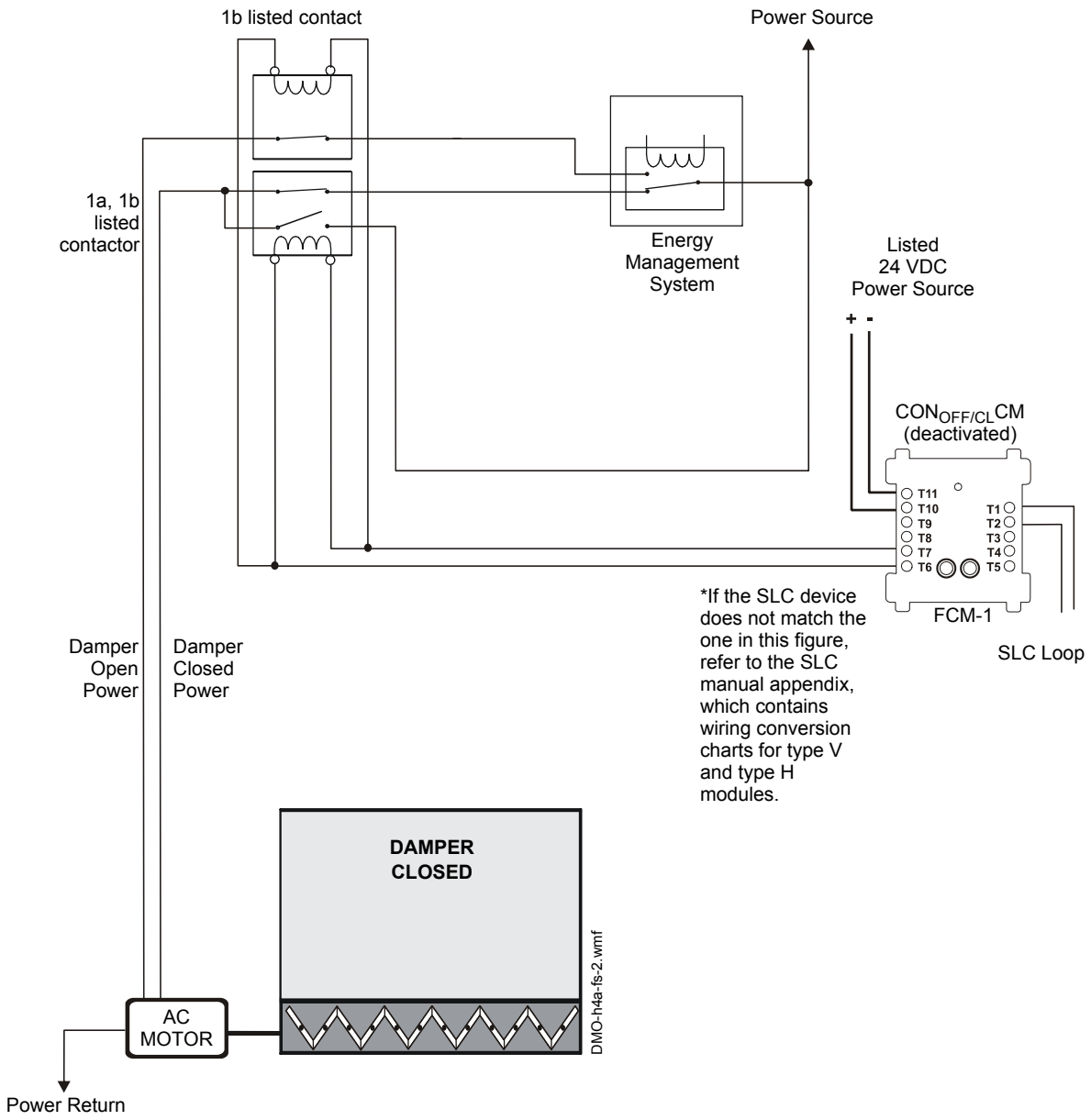

Figure 5.55 Motorized Damper Control - HVAC Switch Group Type 4

Figure 5.55 depicts a motorized damper in an HVAC system with the capability of CLOSED control, switch group type 4. In the above configuration, the $CON_{OFF/CL}CM$ is deactivated. The $CON_{OFF/CL}CM$ controls two contactors: a normally closed contactor for the damper open power line, and a dual normally open/normally closed contactor for the damper close power. When the $CON_{OFF/CL}CM$ is activated, the normally closed contactor is opened (cutting any power supplied by the EMS to the damper open power line), the normally closed portion of the dual contactor is opened (cutting any power supplied by the EMS to the damper closed power line), and the normally open portion of the dual contactor is closed, thus supplying power to close the damper. When the $CON_{OFF/CL}CM$ is deactivated, the EMS is free to control the damper. The EMS is currently supplying power to the damper closed power line. When power is supplied to the damper closed power line, the damper closes.

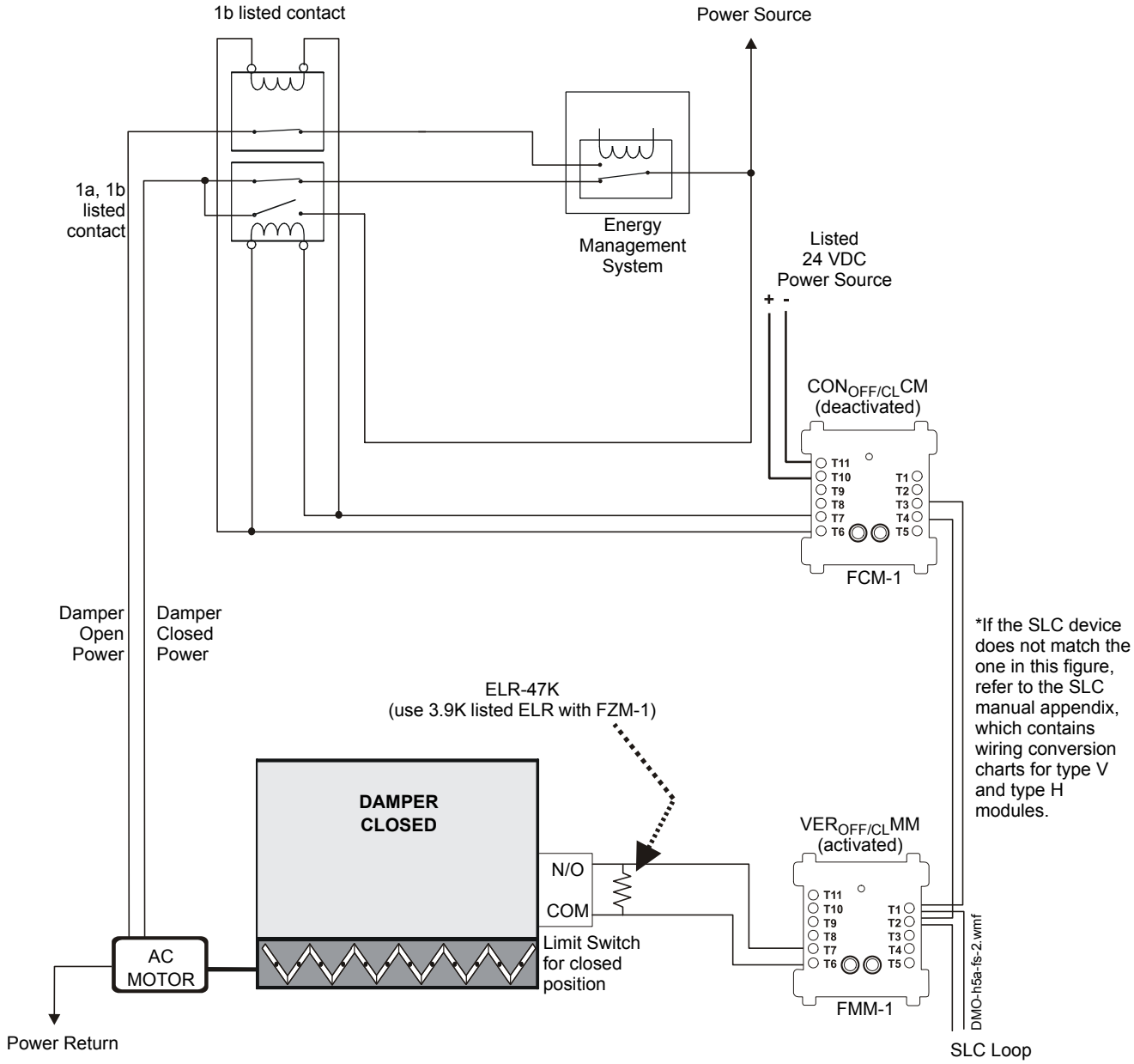

Figure 5.56 Motorized Damper Control - HVAC Switch Group Type 5

Figure 5.56 depicts a motorized damper in an HVAC system with the capability of CLOSED control and verification of the CLOSED state, switch group type 5. In the above configuration, the $CON_{OFF/CL}CM$ is deactivated. The $CON_{OFF/CL}CM$ controls two contactors: a normally closed contactor for the damper open power line, and a dual normally open/normally closed contactor for the damper close power. When the $CON_{OFF/CL}CM$ is activated, the normally closed contactor is opened (cutting any power supplied by the EMS to the damper open power line), the normally closed portion of the dual contactor is opened (cutting any power supplied by the EMS to the damper closed power line), and the normally open portion of the dual contactor is closed, thus supplying power to close the damper. When the $CON_{OFF/CL}CM$ is deactivated, the EMS is free to control the damper. The EMS is currently supplying power to the damper closed power line.

When power is supplied to the damper closed power line, the damper closes. When the damper completely closes, the damper closed limit switch is CLOSED, indicating that the damper is in the CLOSED position. The $VER_{OFF/CL}MM$ monitors the CLOSED position of the damper closed limit switch. In this case the $VER_{OFF/CL}MM$ is activated because the damper is CLOSED.

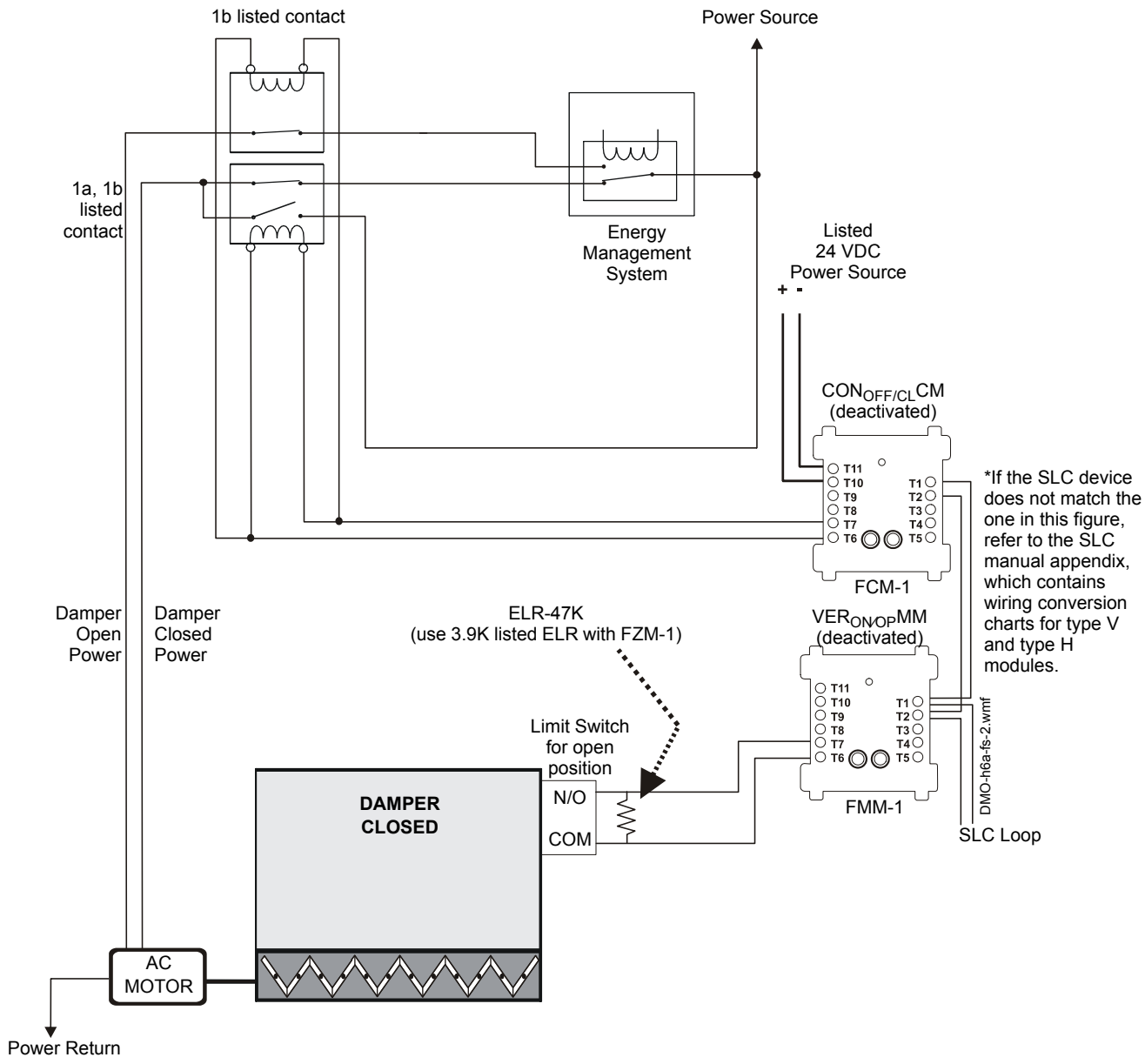

Figure 5.57 Motorized Damper Control - HVAC Switch Group Type 6

Figure 5.57 depicts a motorized damper in an HVAC system with the capability of CLOSED control and verification of the OPEN state, switch group type 6. In the above configuration, the $CON_{OFF/CL}CM$ is deactivated. The $CON_{OFF/CL}CM$ controls two contactors: a normally closed contactor for the damper open power line, and a dual normally open/normally closed contactor for the damper close power. When the $CON_{OFF/CL}CM$ is activated, the normally closed contactor is opened (cutting any power supplied by the EMS to the damper open power line), the normally closed portion of the dual contactor is opened (cutting any power supplied by the EMS to the damper closed power line), and the normally open portion of the dual contactor is closed, thus supplying power to close the damper. When the $CON_{OFF/CL}CM$ is deactivated, the EMS is free to control the damper. The EMS is currently supplying power to the damper closed power line.

When power is supplied to the damper closed power line, the damper closes. When the damper completely closes, the damper closed limit switch is CLOSED, indicating that the damper is in the CLOSED position.

The $VER_{ON/OP}MM$ monitors the CLOSED position of the damper open limit switch. In this case the $VER_{ON/OP}MM$ is deactivated because the damper is CLOSED.

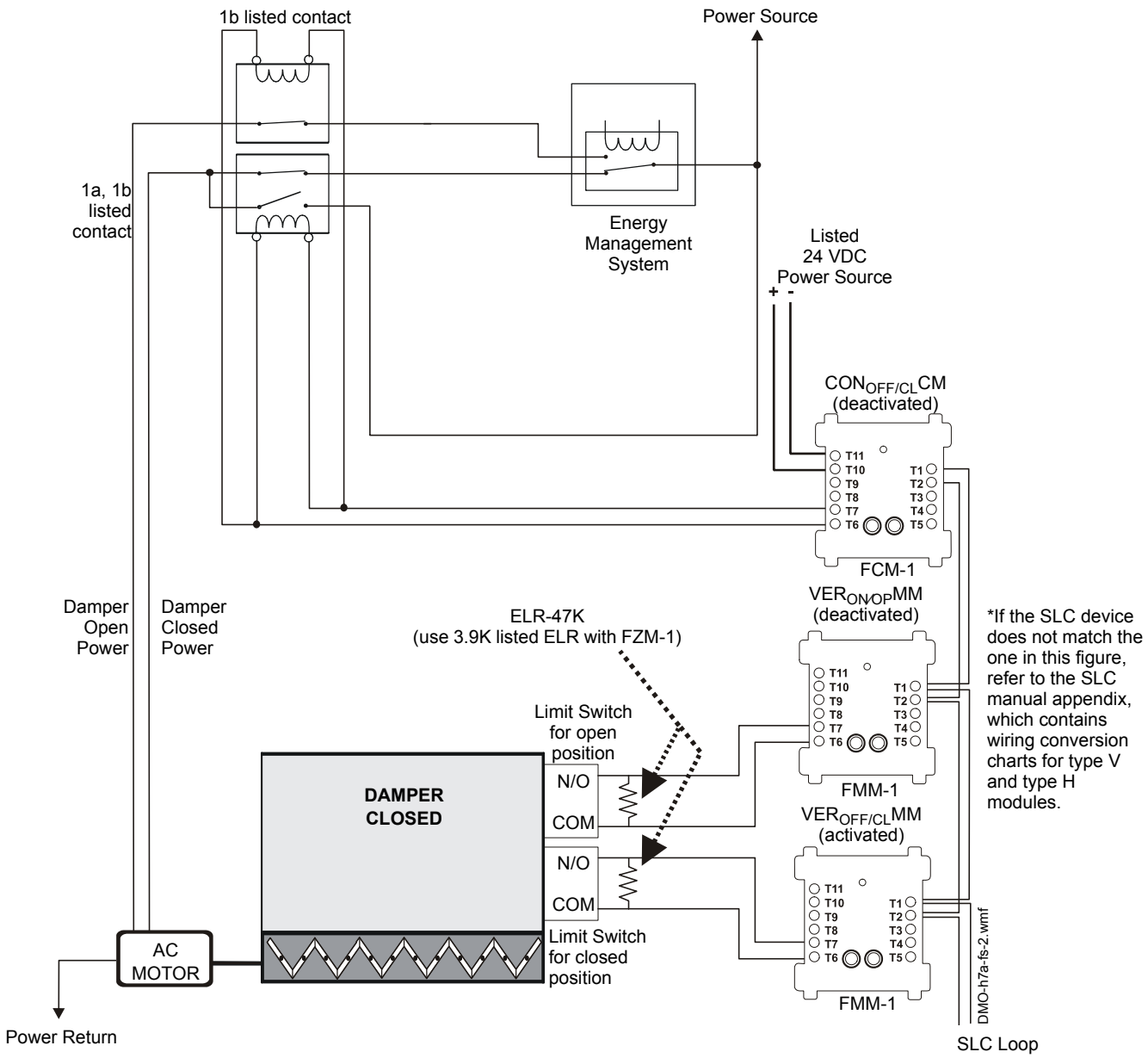

Figure 5.58 Motorized Damper Control - HVAC Switch Group Type 7

Figure 5.58 depicts a motorized damper in an HVAC system with the capability of CLOSED control and verification of the OPEN and CLOSED state, switch group type 7. In the above configuration, the $CON_{OFF/CL}CM$ is deactivated. The $CON_{OFF/CL}CM$ controls two contactors: a normally closed contactor for the damper open power line and a dual normally open/normally closed contactor for the damper close power line. When the $CON_{OFF/CL}CM$ is activated, the normally closed contactor is opened (cutting any power supplied by the EMS to the damper open power line), the normally closed portion of the dual contactor is opened (cutting any power supplied by the EMS to the damper closed power line), and the normally open portion of the dual contactor is closed, thus supplying power to close the damper. When the $CON_{OFF/CL}CM$ is deactivated, the EMS is free to control the damper. The EMS is currently supplying power to the damper closed power line.

When power is supplied to the damper closed power line, the damper closes. When the damper completely closes, the damper closed limit switch is CLOSED, indicating that the damper is in the CLOSED position.

The $VER_{OFF/CL}MM$ monitors the CLOSED position of the damper closed limit switch and the $VER_{ON/OP}MM$ monitors the CLOSED position of the damper open limit switch. In this case the $VER_{OFF/CL}MM$ is activated and the $VER_{ON/OP}MM$ is deactivated because the damper is CLOSED.

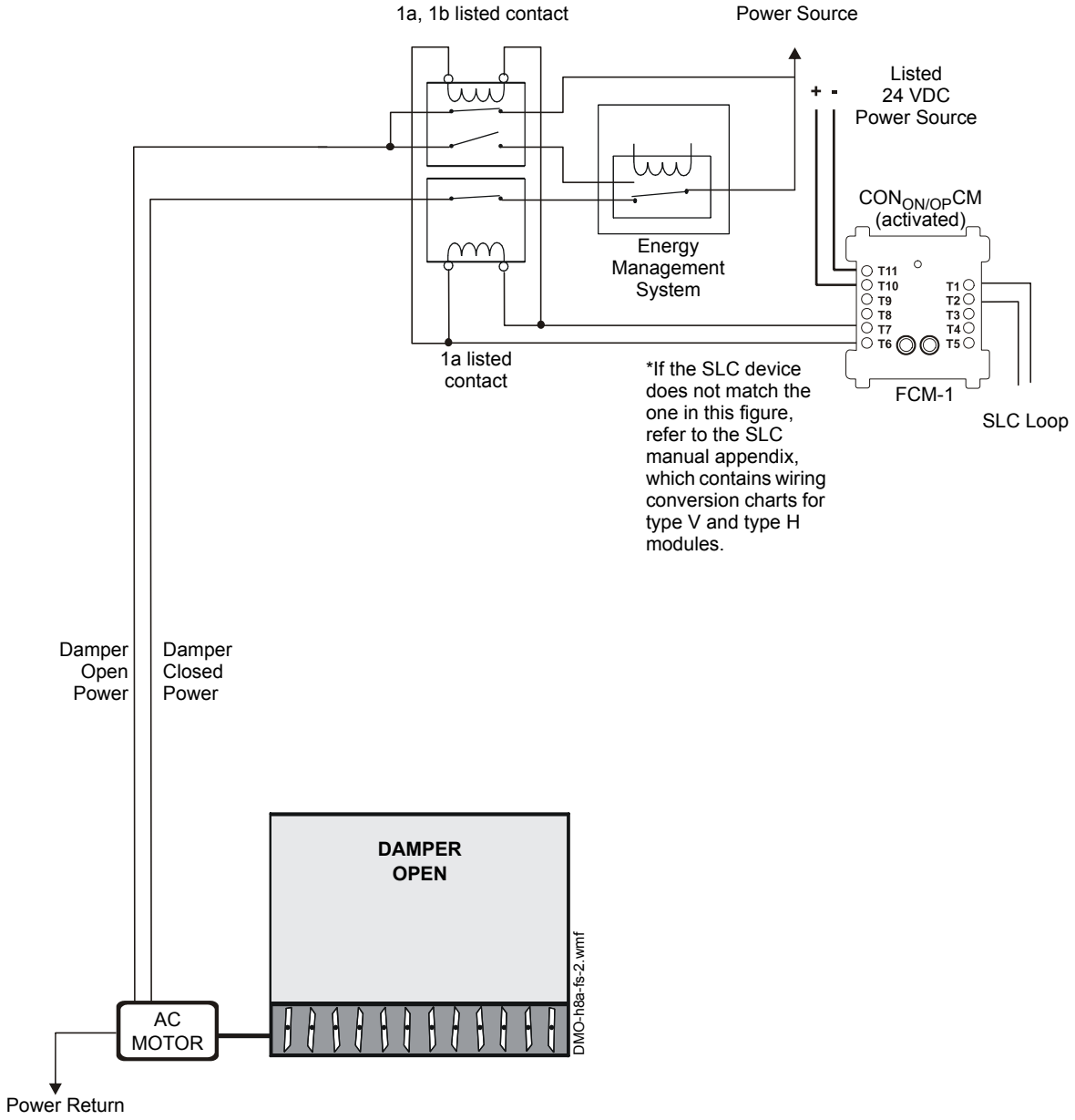

Figure 5.59 Motorized Damper Control - HVAC Switch Group Type 8

Figure 5.59 depicts a motorized damper in an HVAC system with the capability of OPEN control, switch group type 8. In the above configuration, the CON$_{ON/OP}$CM is activated. The CON$_{ON/OP}$CM controls two contactors: a normally closed contactor for the damper closed power line, and a dual normally open/normally closed contactor for the damper open power line. When the CON$_{ON/OP}$CM is activated, the normally closed contactor is opened (cutting any power supplied by the EMS to the damper closed power line), the normally closed portion of the dual contactor is opened (cutting any power supplied by the EMS to the damper open power line), and the normally open portion of the dual contactor is closed, thus supplying power to close the damper. When the CON$_{ON/OP}$CM is deactivated, the EMS is free to control the damper. The EMS is currently being overridden by the CON$_{ON/OP}$CM.

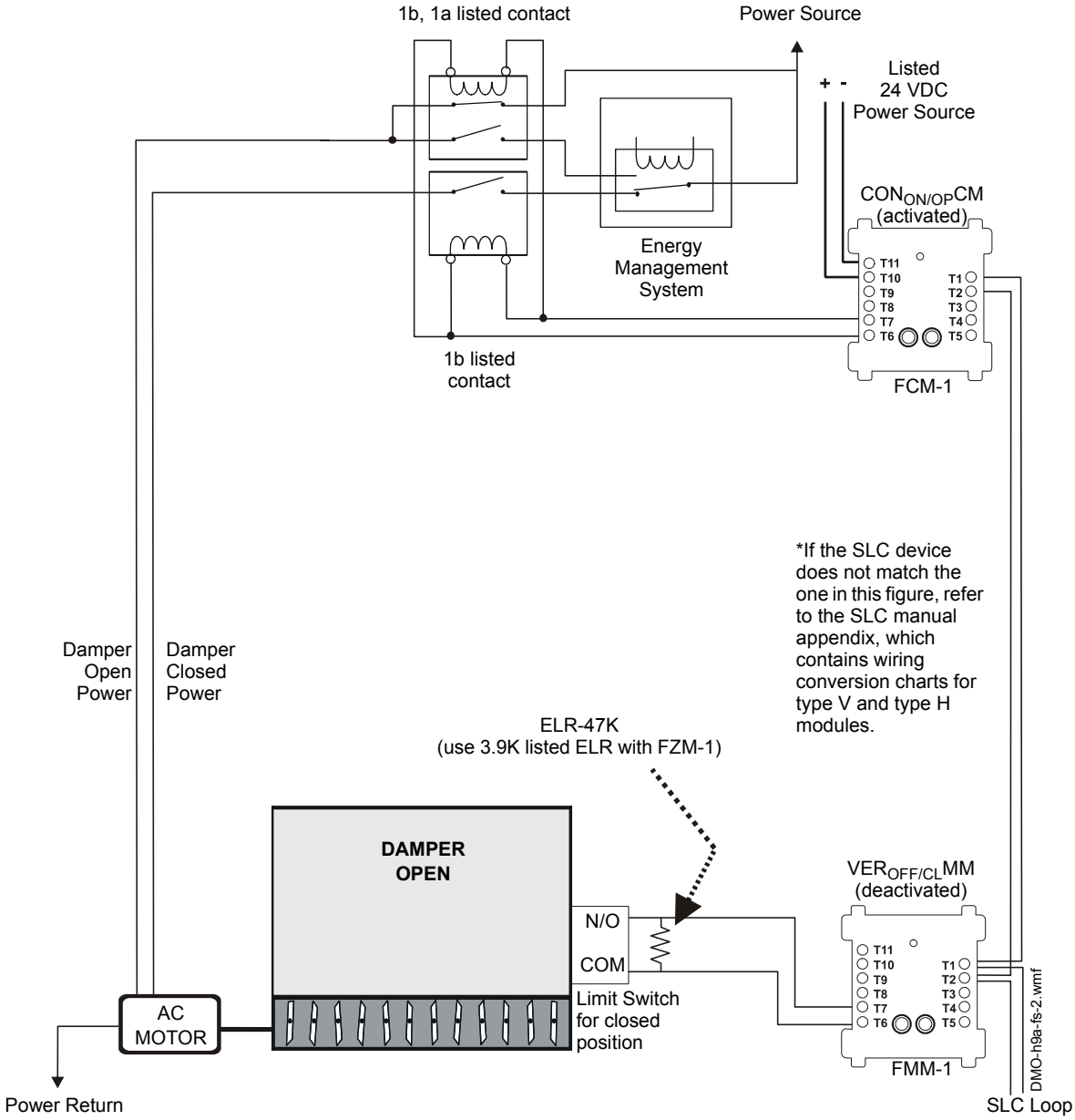

Figure 5.60 Motorized Damper Control - HVAC Switch Group Type 9

Figure 5.60 depicts a motorized damper in an HVAC system with the capability of OPEN control and verification of the CLOSED state, switch group type 9. In the above configuration, the $CON_{ON/OP}CM$ is activated. The $CON_{ON/OP}CM$ controls two contactors: a normally closed contactor for the damper closed power line, and a dual normally open/normally closed contactor for the damper open power line. When the $CON_{ON/OP}CM$ is activated, the normally closed contactor is opened (cutting any power supplied by the EMS to the damper closed power line), the normally closed portion of the dual contactor is opened (cutting any power supplied by the EMS to the damper open power line), and the normally open portion of the dual contactor is closed, thus supplying power to close the damper. When the $CON_{ON/OP}CM$ is deactivated, the EMS is free to control the damper. The EMS is currently being overridden by the $CON_{ON/OP}CM$.

When power is supplied to the damper open power line, the damper opens. When the damper completely opens, the damper open limit switch is CLOSED, indicating that the damper is in the OPEN position.

The $VER_{OFF/CL}MM$ monitors the CLOSED position of the damper closed limit switch. In this case the $VER_{OFF/CL}MM$ is deactivated because the damper is OPEN.

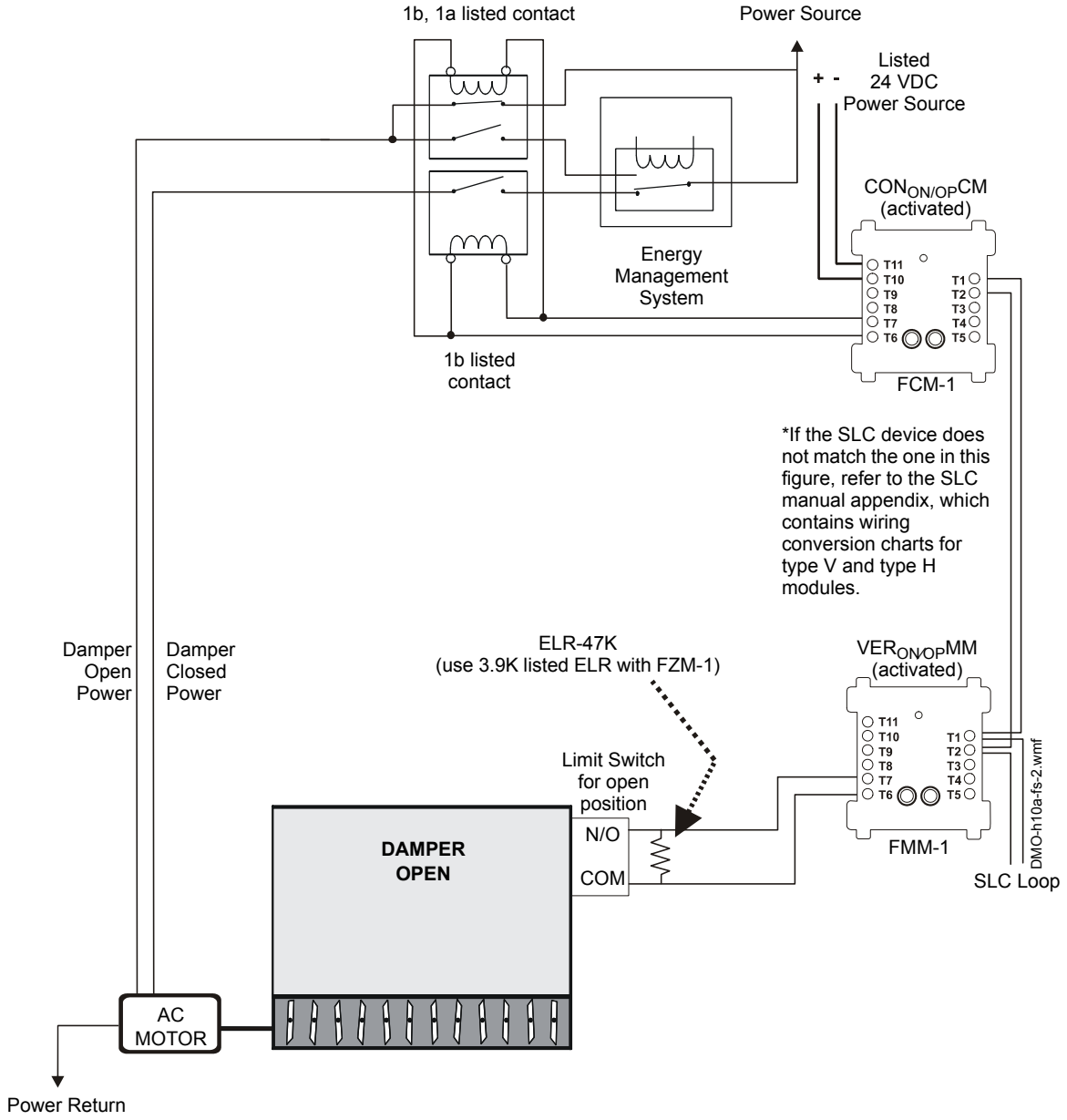

Figure 5.61 Motorized Damper Control - HVAC Switch Group Type 10

Figure 5.61 depicts a motorized damper in an HVAC system with the capability of OPEN control and verification of the OPEN state, switch group type 10. In the above configuration, the $CON_{ON/OP}CM$ is activated. The $CON_{ON/OP}CM$ controls two contactors: a normally closed contactor for the damper closed power line, and a dual normally open/normally closed contactor for the damper open power line. When the $CON_{ON/OP}CM$ is activated, the normally closed contactor is opened (cutting any power supplied by the EMS to the damper closed power line), the normally closed portion of the dual contactor is opened (cutting any power supplied by the EMS to the damper open power line), and the normally open portion of the dual contactor is closed, thus supplying power to close the damper. When the $CON_{ON/OP}CM$ is deactivated, the EMS is free to control the damper. The EMS is currently being overridden by the $CON_{ON/OP}CM$.

When power is supplied to the damper open power line, the damper opens. When the damper completely opens, the damper open limit switch is CLOSED, indicating that the damper is in the OPEN position.

The $VER_{ON/OP}MM$ monitors the CLOSED position of the damper open limit switch. In this case the $VER_{ON/OP}MM$ is activated because the damper is OPEN.

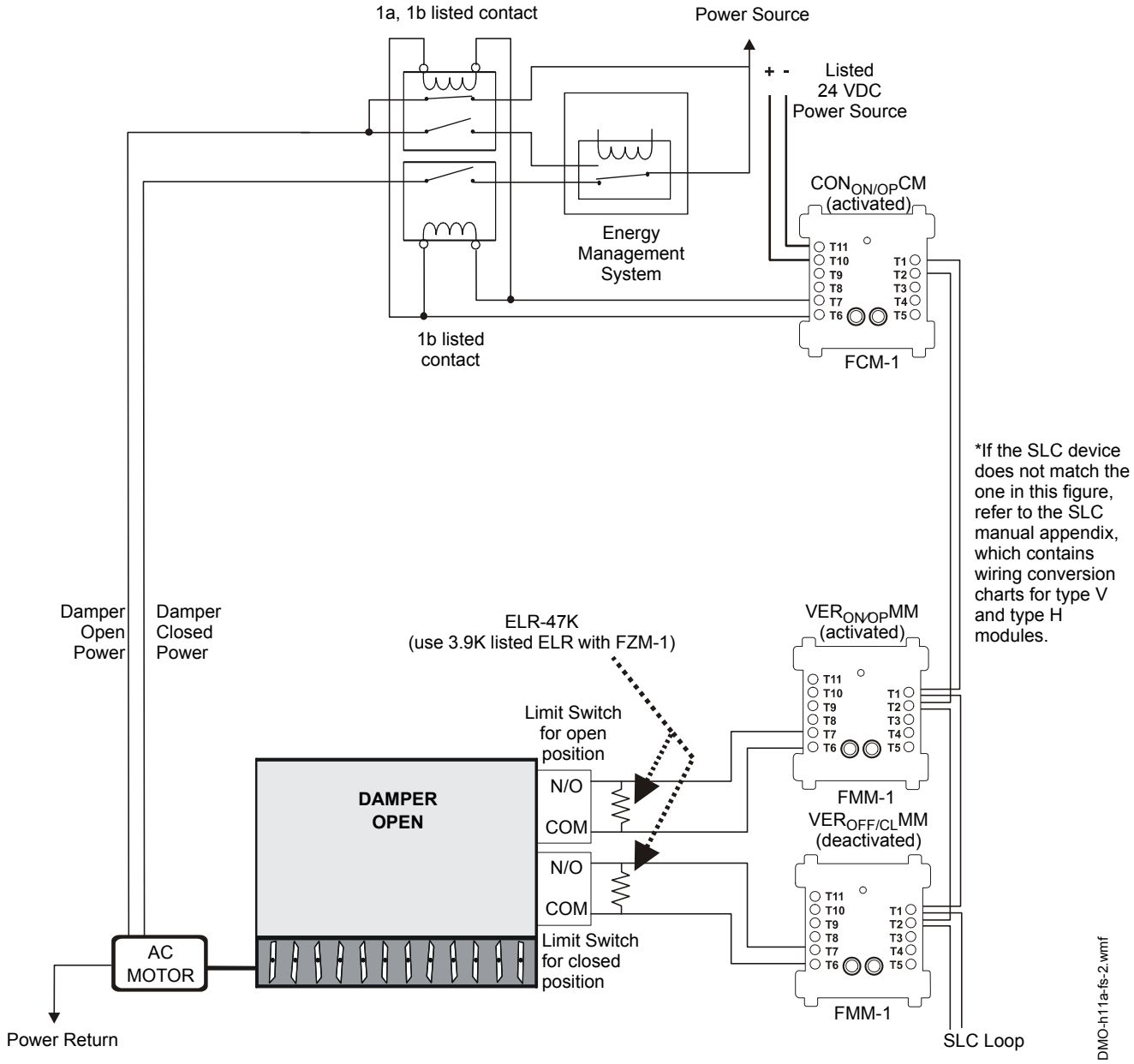

Figure 5.62 Motorized Damper Control - HVAC Switch Group Type 11

Figure 5.62 depicts a motorized damper in an HVAC system with the capability of OPEN control and verification of the OPEN and CLOSED state, switch group type 11. In the above configuration, the $CON_{ON/OP}CM$ is activated. The $CON_{ON/OP}CM$ controls two contactors: a normally closed contactor for the damper closed power line, and a dual normally open/normally closed contactor for the damper open power line. When the $CON_{ON/OP}CM$ is activated, the normally closed contactor is opened (cutting any power supplied by the EMS to the damper closed power line), the normally closed portion of the dual contactor is opened (cutting any power supplied by the EMS to the damper open power line), and the normally open portion of the dual contactor is closed, thus supplying power to close the damper. When the $CON_{ON/OP}CM$ is deactivated, the EMS is free to control the damper. The EMS is currently being overridden by the $CON_{ON/OP}CM$.

When power is supplied to the damper open power line, the damper opens. When the damper completely opens, the damper open limit switch is CLOSED, indicating that the damper is in the OPEN position.

The $VER_{OFF/CL}MM$ monitors the CLOSED position of the damper closed limit switch and the $VER_{ON/OP}MM$ monitors the CLOSED position of the damper open limit switch. In this case the $VER_{OFF/CL}MM$ is deactivated and the $VER_{ON/OP}MM$ is activated because the damper is OPEN.

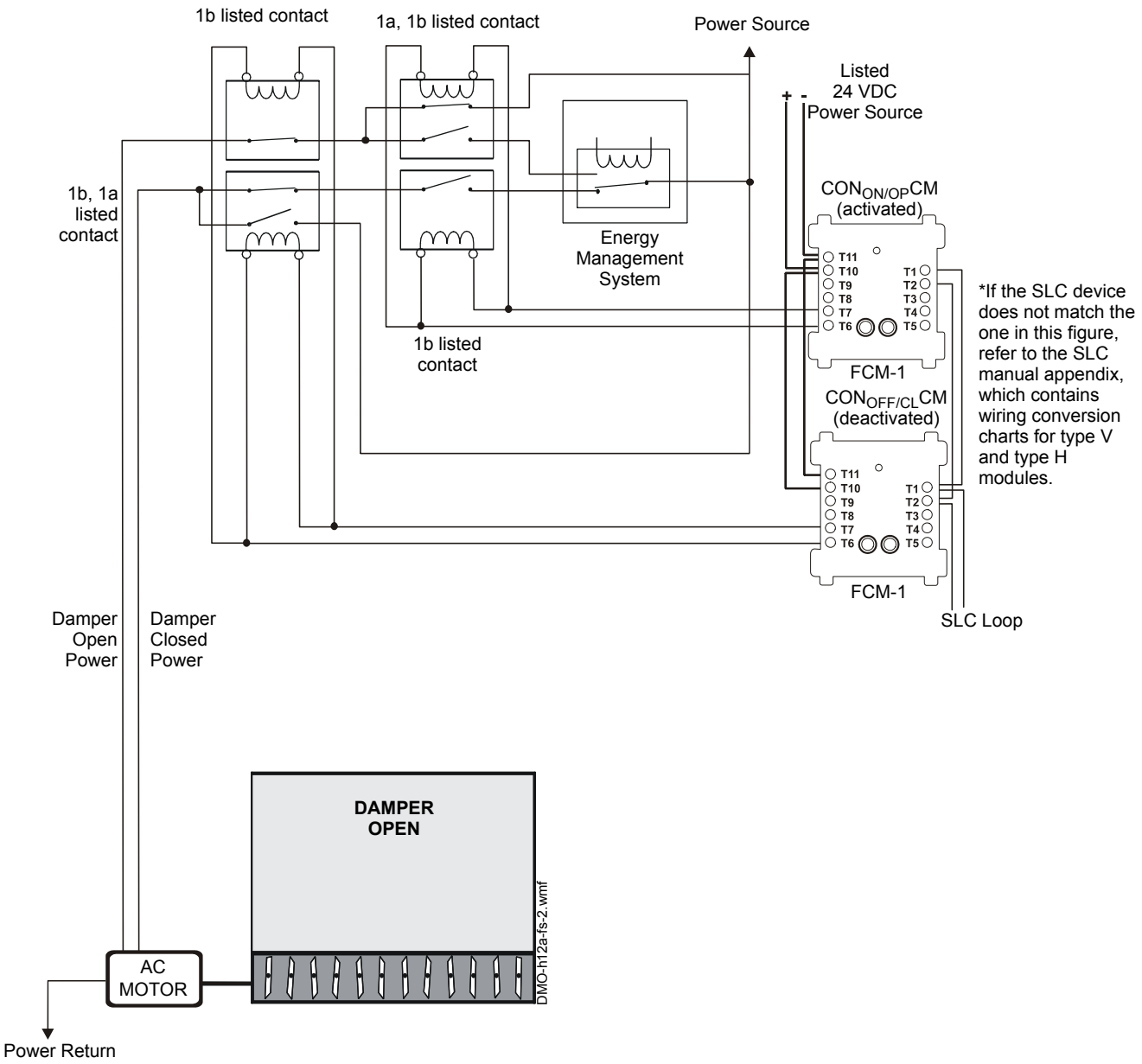

Figure 5.63 Motorized Damper Control - HVAC Switch Group Type 12

Figure 5.63 depicts a motorized damper in an HVAC system with the capability of OPEN and CLOSED control, switch group type 12. In the above configuration, the $CON_{ON/OP}CM$ is activated and the $CON_{OFF/CL}CM$ is deactivated. Under normal operation (non-smoke control mode) both control modules would be deactivated, allowing the EMS system to freely control the damper. The $CON_{ON/OP}CM$ controls two contactors: a normally closed contactor for the damper closed power line, and a dual normally open/normally closed contactor for the damper open power line. The $CON_{OFF/CL}CM$ controls two contactors: a normally closed contactor for the damper open power line, and a dual normally open/normally closed contactor for the damper closed power line. When the $CON_{ON/OP}CM$ is activated, the $CON_{OFF/CL}CM$ is deactivated, and vice versa. When the $CON_{ON/OP}CM$ is activated, the normally closed contactor is opened (cutting any power supplied by the EMS to the damper closed power line), the normally closed portion of the dual contactor is opened (cutting any power supplied by the EMS to the damper open power line), and the normally open portion of the dual contactor is closed, thus supplying power to open the damper.

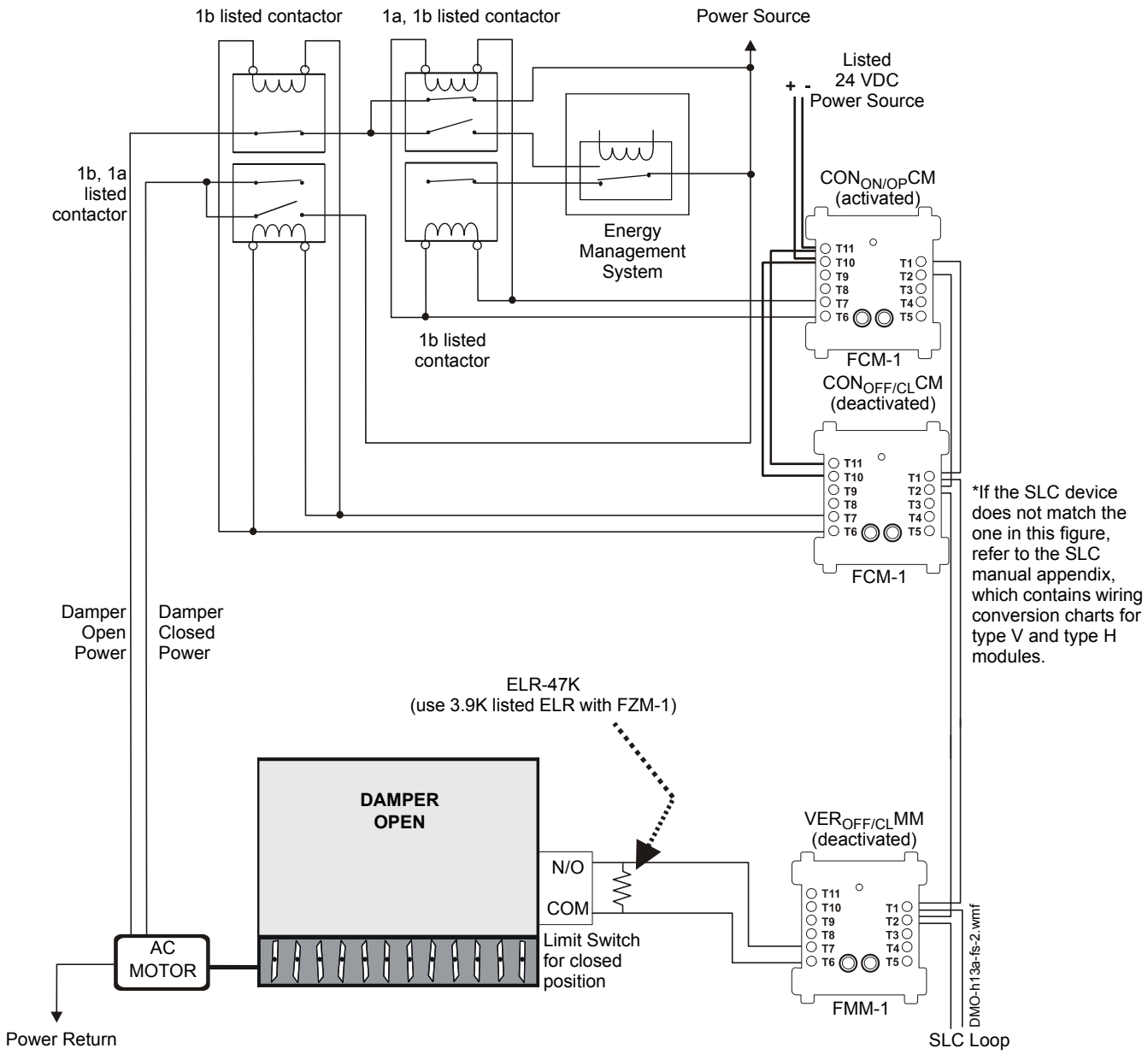

Figure 5.64 Motorized Damper Control - HVAC Switch Group Type 13

Figure 5.64 depicts a motorized damper in an HVAC system with the capability of OPEN and CLOSED control and verification of the CLOSED state, switch group type 13. In the above configuration, the $CON_{ON/OP}CM$ is activated and the $CON_{OFF/CL}CM$ is deactivated. Under normal operation (non-smoke control mode) both control modules would be deactivated, allowing the EMS system to freely control the damper. The $CON_{ON/OP}CM$ controls two contactors: a normally closed contactor for the damper closed power line, and a dual normally open/normally closed contactor for the damper open power line. The $CON_{OFF/CL}CM$ controls two contactors: a normally closed contactor for the damper open power line and a dual normally open/normally closed contactor for the damper close power line. When the $CON_{ON/OP}CM$ is activated, the $CON_{OFF/CL}CM$ is deactivated and vice versa. When the $CON_{ON/OP}CM$ is activated, the normally closed contactor is opened (cutting any power supplied by the EMS to the damper closed power line), the normally closed portion of the dual contactor is opened (cutting any power supplied by the EMS to the damper open power line), and the normally open portion of the dual contactor is closed, thus supplying power to open the damper.

When power is supplied to the damper open power line, the damper opens. When the damper completely opens, the damper open limit switch is CLOSED, indicating that the damper is in the OPEN position. The $VER_{OFF/CL}MM$ monitors the CLOSED position of the damper closed limit switch. In this case the $VER_{OFF/CL}MM$ is deactivated because the damper is OPEN.

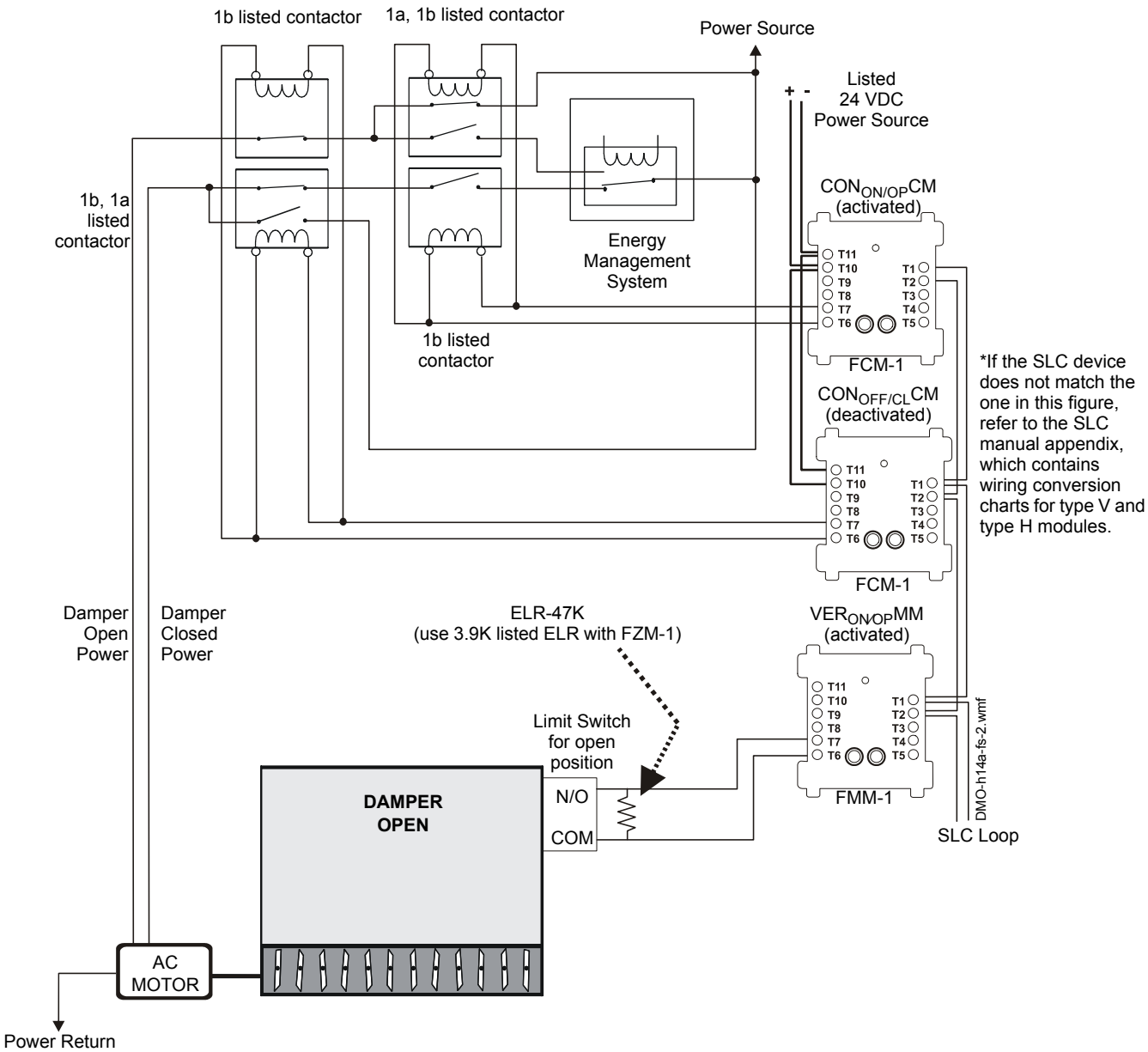

Figure 5.65 Motorized Damper Control - HVAC Switch Group Type 14

Figure 5. depicts a motorized damper in an HVAC system with the capability of OPEN and CLOSED control and verification of the OPEN state, switch group type 14. In the above configuration, the $CON_{ON/OP}CM$ is activated and the $CON_{OFF/CL}CM$ is deactivated. Under normal operation (non-smoke control mode) both control modules would be deactivated, allowing the EMS system to freely control the damper. The $CON_{ON/OP}CM$ controls two contactors: a normally closed contactor for the damper closed power line, and a dual normally open/normally closed contactor for the damper open power line. The $CON_{OFF/CL}CM$ controls two contactors: a normally closed contactor for the damper open power line, and a dual normally open/normally closed contactor for the damper close power line. When the $CON_{ON/OP}CM$ is activated, the $CON_{OFF/CL}CM$ is deactivated, and vice versa. When the $CON_{ON/OP}CM$ is activated, the normally closed contactor is opened (cutting any power supplied by the EMS to the damper closed power line), the normally closed portion of the dual contactor is opened (cutting any power supplied by the EMS to the damper open power line), and the normally open portion of the dual contactor is closed, thus supplying power to open the damper.

When power is supplied to the damper open power line, the damper opens. When the damper completely opens, the damper open limit switch is CLOSED, indicating that the damper is in the OPEN position. The $VER_{ON/OP}MM$ monitors the CLOSED position of the damper open limit switch. In this case the $VER_{ON/OP}MM$ is activated because the damper is OPEN.

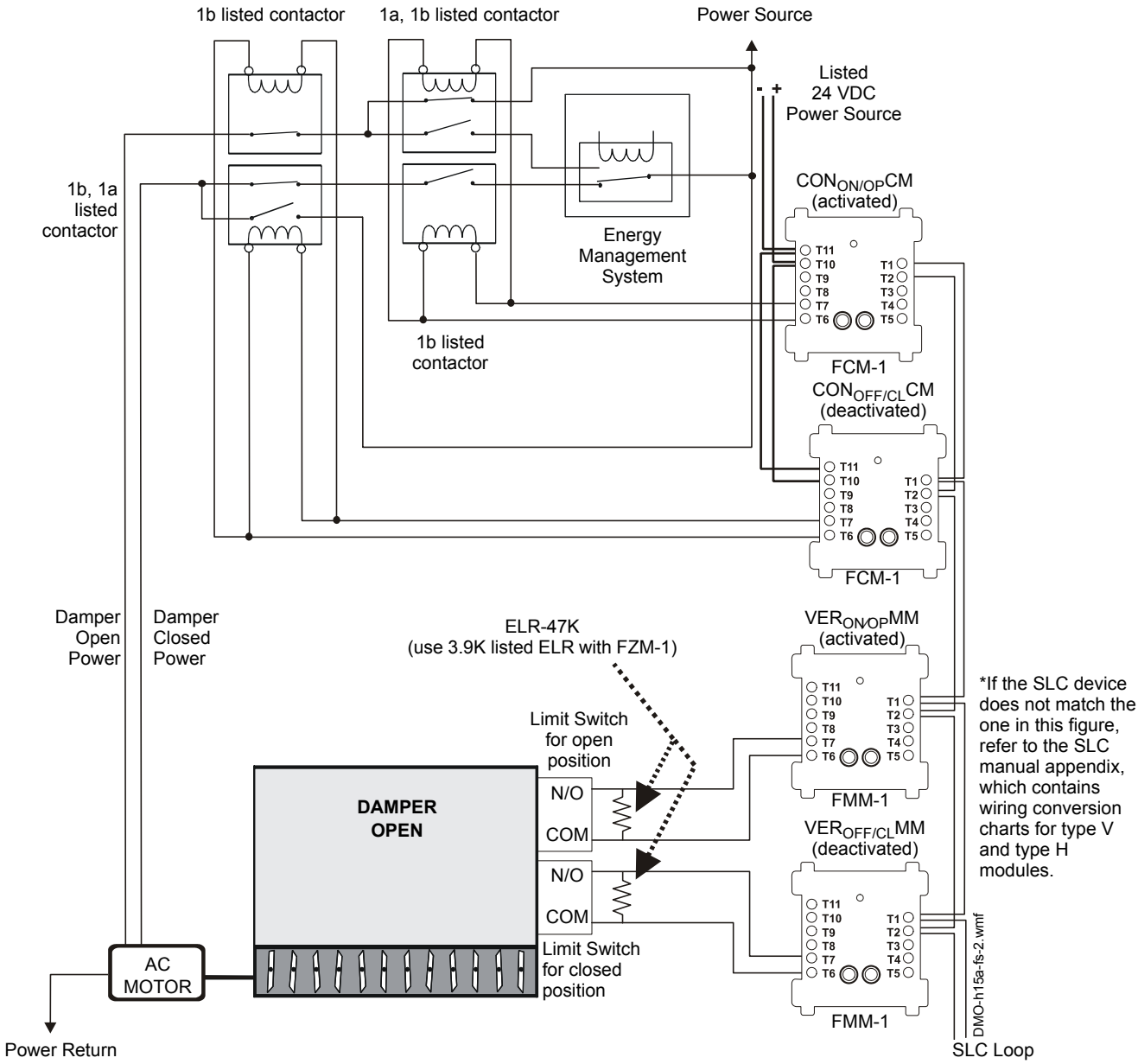

Figure 5.66 Motorized Damper Control - HVAC Switch Group Type 15

Figure 5.66 depicts a motorized damper in an HVAC system with the capability of OPEN and CLOSED control and verification of the OPEN and CLOSED state, switch group type 15. In the above configuration, the $CON_{ON/OP}CM$ is activated and the $CON_{OFF/CL}CM$ is deactivated. Under normal operation (non-smoke control mode) both control modules would be deactivated, allowing the EMS system to freely control the damper. The $CON_{ON/OP}CM$ controls two contactors: a normally closed contactor for the damper closed power line, and a dual normally open/normally closed contactor for the damper open power line. The $CON_{OFF/CL}CM$ controls two contactors: a normally closed contactor for the damper open power line, and a dual normally open/normally closed contactor for the damper close power line. When the $CON_{ON/OP}CM$ is activated, the $CON_{OFF/CL}CM$ is deactivated and vice versa. When the $CON_{ON/OP}CM$ is activated, the normally closed contactor is opened (cutting any power supplied by the EMS to the damper closed power line), the normally closed portion of the dual contactor is opened (cutting any power supplied by the EMS to the damper open power line), and the normally open portion of the dual contactor is closed, thus supplying power to open the damper.

When power is supplied to the damper open power line, the damper opens. When the damper completely opens, the damper open limit switch is CLOSED and the damper closed switch OPENS, indicating that the damper is in the OPEN position. The $VER_{ON/OP}MM$ monitors the CLOSED position of the damper open limit switch and the $VER_{OFF/CL}MM$ monitors the CLOSED position of the damper closed limit switch. In this case the $VER_{ON/OP}MM$ is activated and the $VER_{OFF/CL}MM$ is deactivated because the damper is OPEN.

5.5.3 EP Dampers

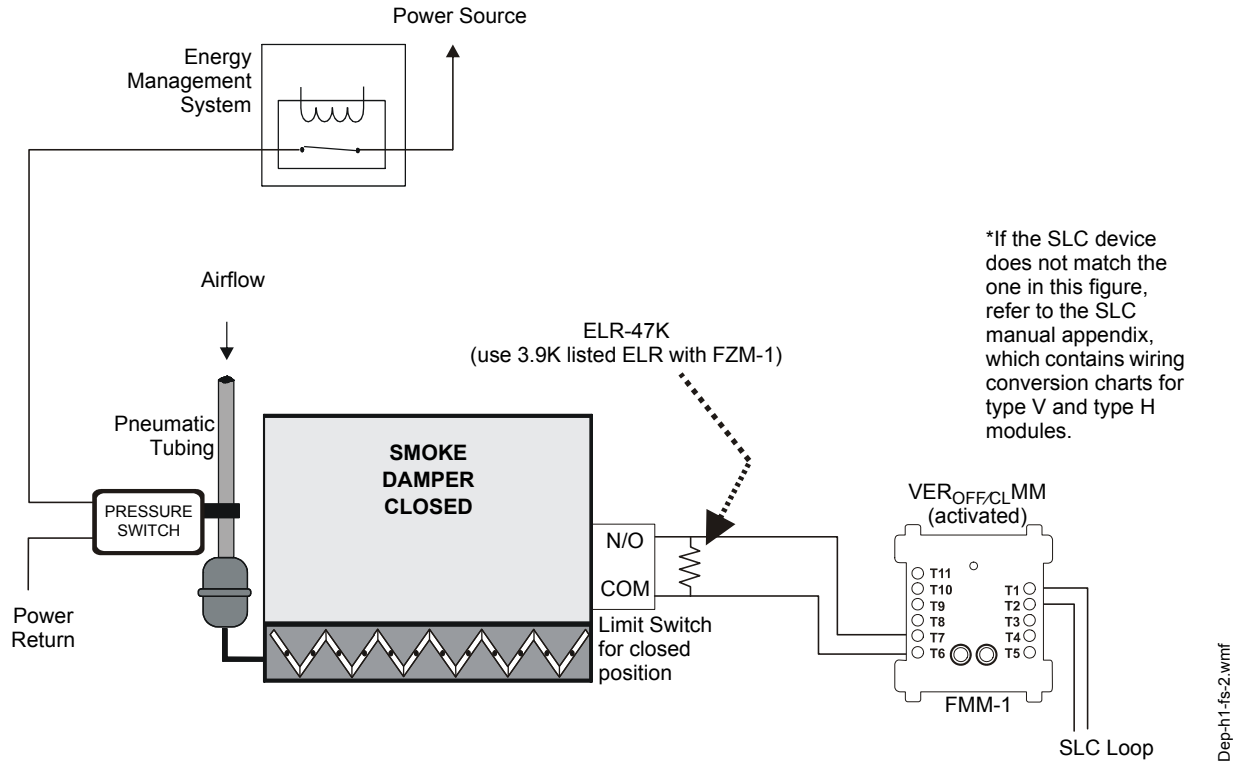

Figure 5.67 EP Damper Monitor - HVAC Switch Group Type 1

Figure 5.67 depicts an EP damper in an HVAC system with the capability of verifying the CLOSED state, switch group type 1. In the above configuration, the EMS is supplying power to the pressure switch. When power is supplied, the pressure switch cuts the airflow to the damper, closing the damper. When the damper completely closes, the damper closed limit switch is CLOSED, indicating that the damper is in the CLOSED position. The $VER_{OFF/CL}MM$ monitors the CLOSED position of the damper closed limit switch. In this case the $VER_{OFF/CL}MM$ is activated because the damper is CLOSED.

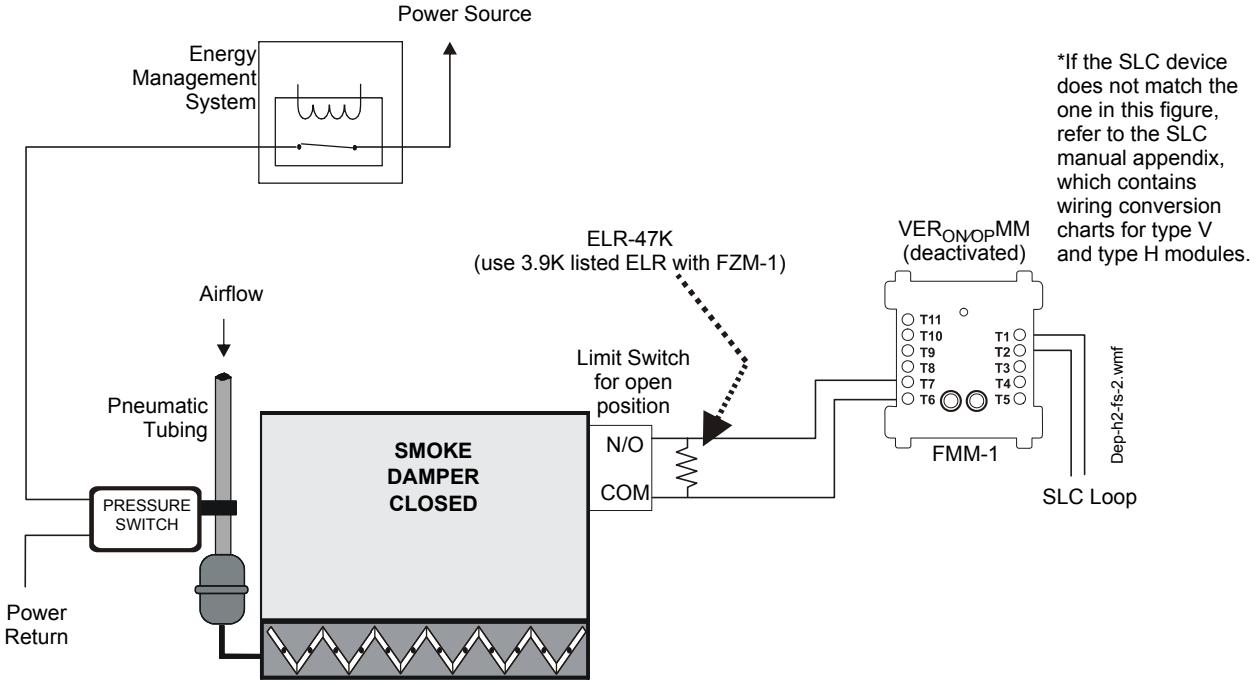

Figure 5.68 EP Damper Monitor - HVAC Switch Group Type 2

Figure 5.68 depicts an EP damper in an HVAC system with the capability of verifying the OPEN state, switch group type 2. In the above configuration, the EMS is supplying power to the pressure switch. When power is supplied, the pressure switch cuts the airflow to the damper, closing the damper. When the damper completely closes, the damper closed limit switch is CLOSED, indicating that the damper is in the CLOSED position. The $VER_{ON/OP}MM$ monitors the CLOSED position of the damper open limit switch. In this case the $VER_{ON/OP}MM$ is deactivated because the damper is CLOSED.

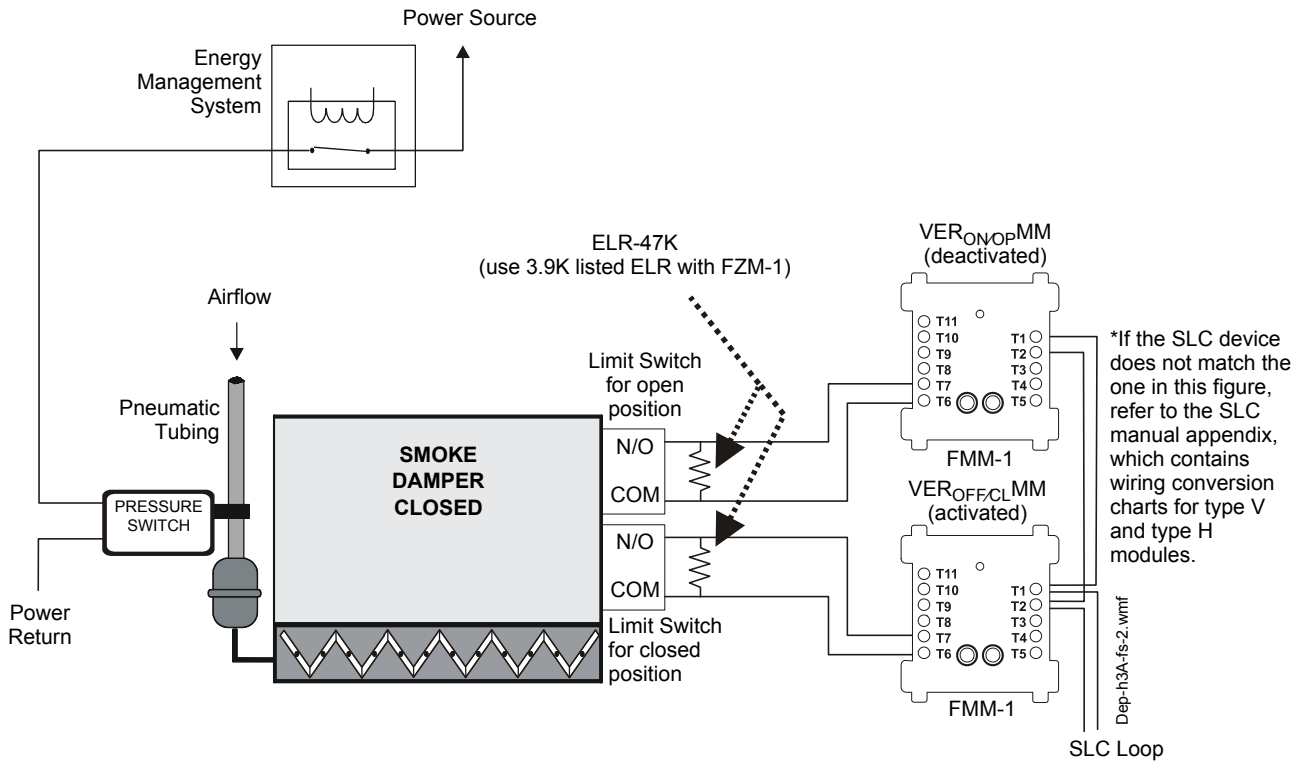

Figure 5.69 EP Damper Monitor - HVAC Switch Group Type 3

Figure 5.69 depicts an EP damper in an HVAC system with the capability of verifying the OPEN and CLOSED state, switch group type 3. In the above configuration, the EMS is supplying power to the pressure switch. When power is supplied, the pressure switch cuts the airflow to the damper, closing the damper. When the damper completely closes, the damper closed limit switch is CLOSED and the damper open limit switch is OPEN, indicating that the damper is in the CLOSED position. The $VER_{OFF/CL}MM$ monitors the CLOSED position of the damper closed limit switch and the $VER_{ON/OP}MM$ monitors the CLOSED position of the damper open limit switch. In this case the $VER_{OFF/CL}MM$ is activated and the $VER_{ON/OP}MM$ is deactivated because the damper is CLOSED.

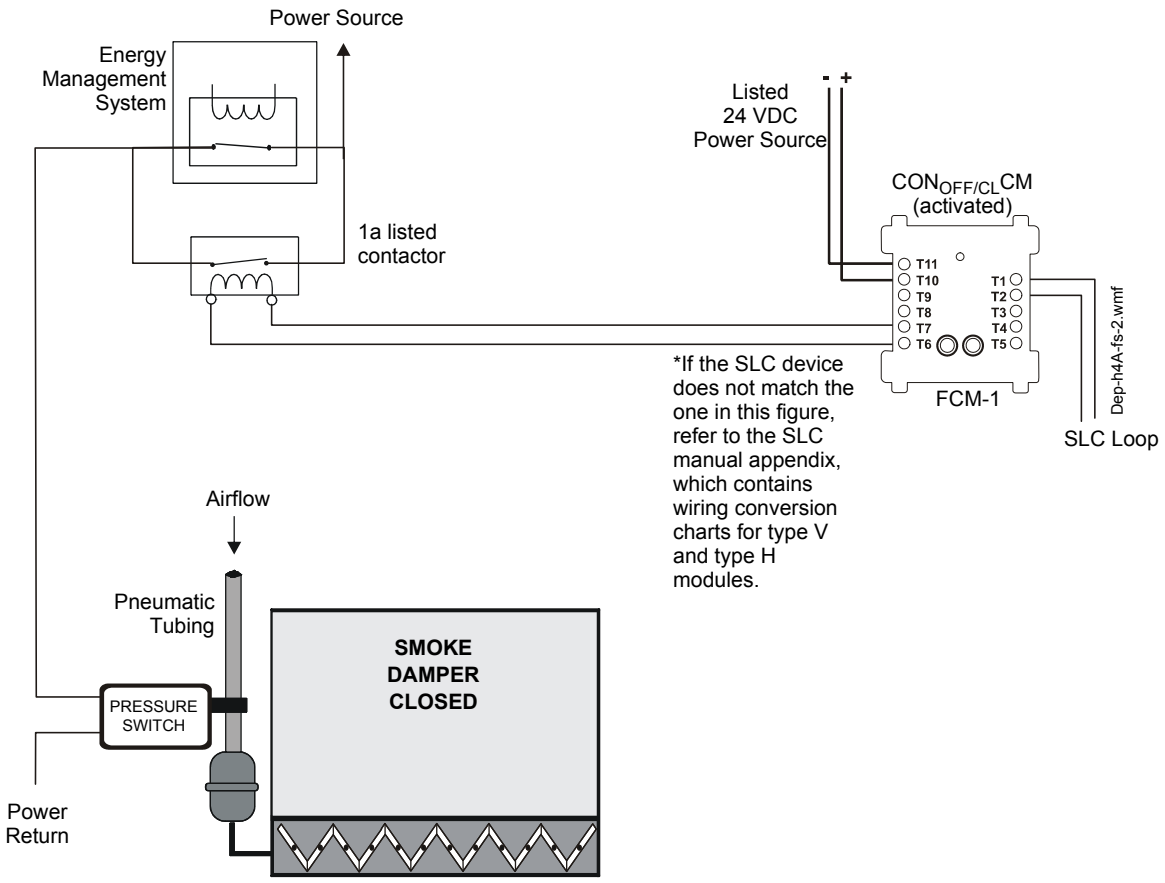

Figure 5.70 EP Damper Control - HVAC Switch Group Type 4

Figure 5.70 depicts an EP damper in an HVAC system with the capability of CLOSED control, switch group type 4. In the above configuration, the $CON_{OFF/CL}CM$ is activated. The $CON_{OFF/CL}CM$ controls a normally open contactor for the pressure switch power line. When the $CON_{OFF/CL}CM$ is activated, the normally open contactor is closed. When the contactor closes, power is supplied to the pressure switch which cuts the airflow to the damper, closing the damper. When the $CON_{OFF/CL}CM$ is deactivated, the EMS is free to control the damper. The EMS is currently being overridden by the $CON_{OFF/CL}CM$.

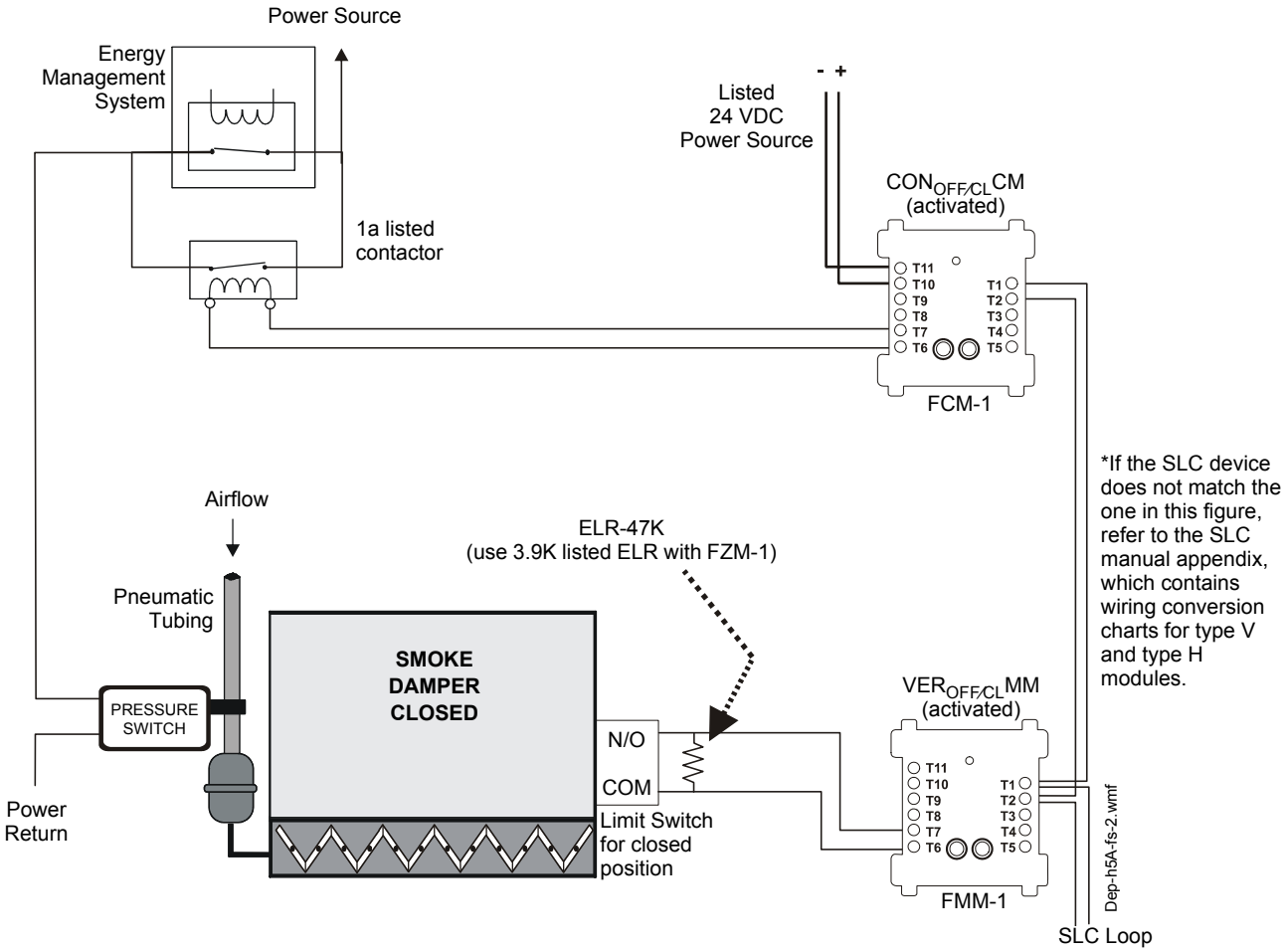

Figure 5.71 EP Damper Control - HVAC Switch Group Type 5

Figure 5.71 depicts an EP damper in an HVAC system with the capability of CLOSED control and verification of the CLOSED state, switch group type 5. In the above configuration, the $CON_{OFF/CL}CM$ is activated. The $CON_{OFF/CL}CM$ controls a normally open contactor for the pressure switch power line. When the $CON_{OFF/CL}CM$ is activated, the normally open contactor is closed. When the contactor closes, power is supplied to the pressure switch, which cuts the airflow to the damper and closes it. When the $CON_{OFF/CL}CM$ is deactivated, the EMS is free to control the damper. The EMS is currently being overridden by the $CON_{OFF/CL}CM$.

When power is supplied to the pressure switch, the damper closes. When the damper completely closes, the damper closed limit switch is CLOSED, indicating that the damper is in the CLOSED position. The $VER_{OFF/CL}MM$ monitors the CLOSED position of the damper closed limit switch. In this case the $VER_{OFF/CL}MM$ is activated because the damper is CLOSED.

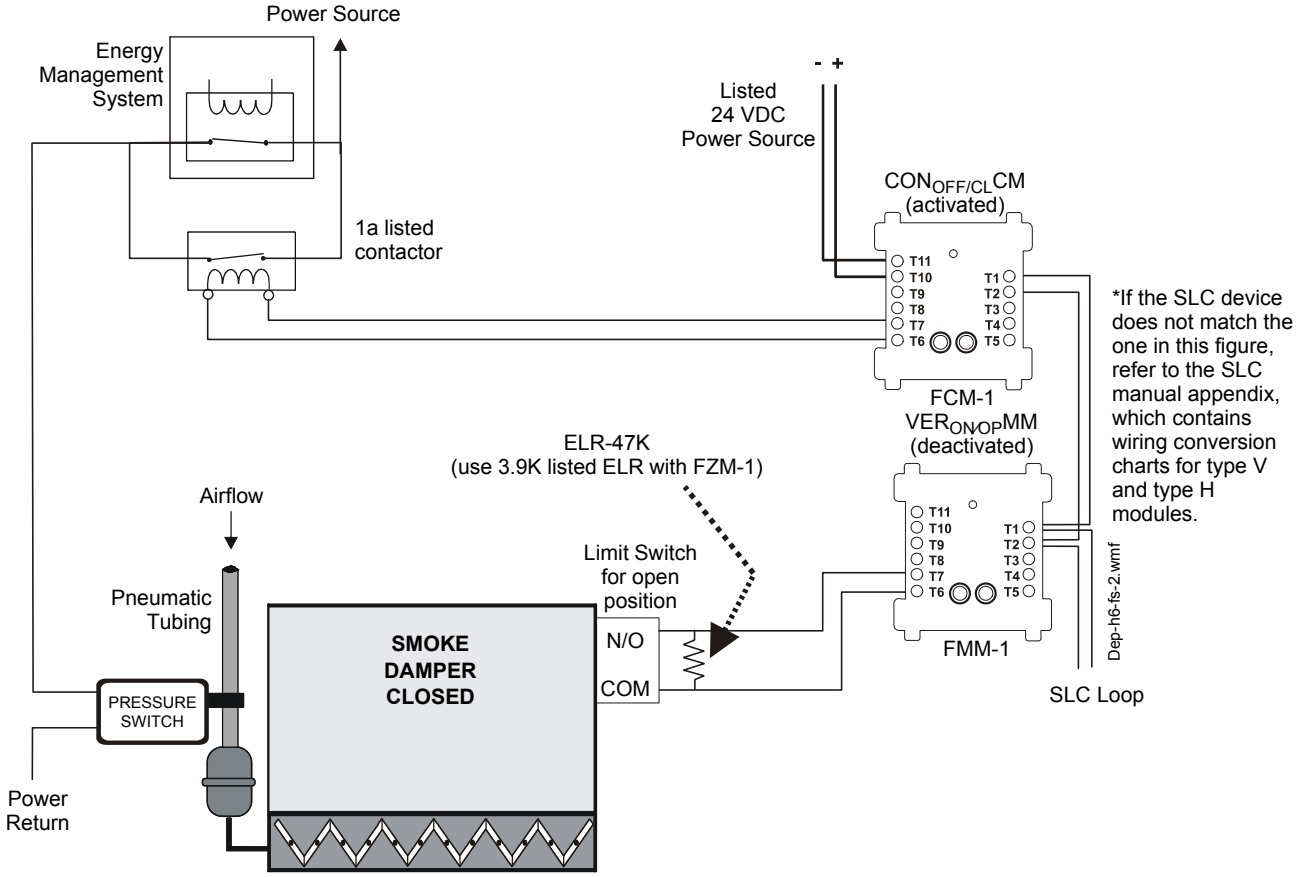

Figure 5.72 EP Damper Control - HVAC Switch Group Type 6

Figure 5.72 depicts an EP damper in an HVAC system with the capability of CLOSED control and verification of the OPEN state, switch group type 6. In the above configuration, the $CON_{OFF/CL}CM$ is activated. The $CON_{OFF/CL}CM$ controls a normally open contactor for the pressure switch power line. When the $CON_{OFF/CL}CM$ is activated, the normally open contactor is closed. When the contactor closes, power is supplied to the pressure switch, which cuts the airflow to the damper and closes it. When the $CON_{OFF/CL}CM$ is deactivated, the EMS is free to control the damper. The EMS is currently being overridden by the $CON_{OFF/CL}CM$.

When power is supplied to the pressure switch, the damper closes. When the damper completely closes, the damper closed limit switch is CLOSED, indicating that the damper is in the CLOSED position. The $VER_{ON/OP}MM$ monitors the CLOSED position of the damper open limit switch. In this case the $VER_{ON/OP}MM$ is deactivated because the damper is CLOSED.

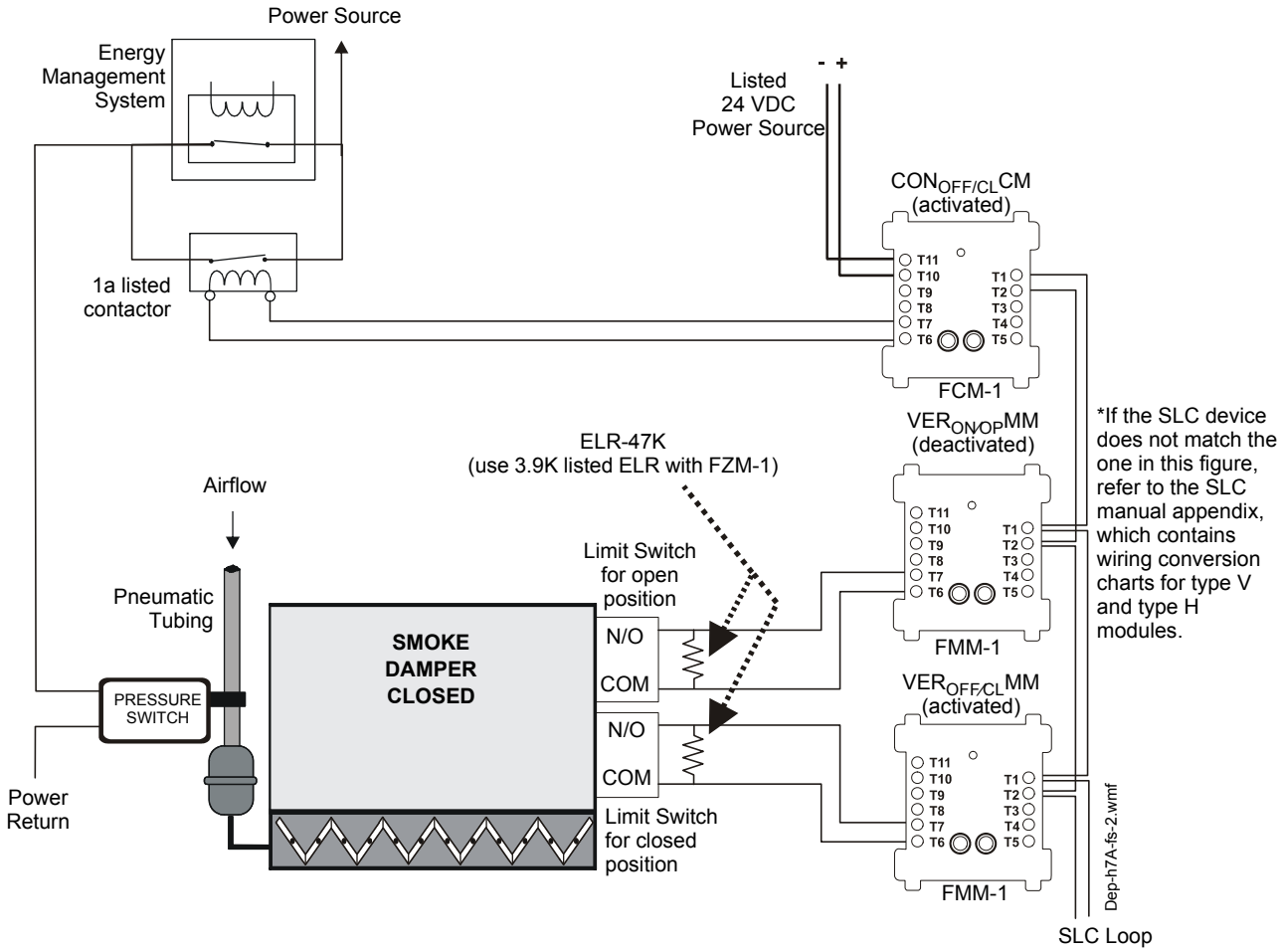

Figure 5.73 EP Damper Control - HVAC Switch Group Type 7

Figure 5.73 depicts an EP damper in an HVAC system with the capability of CLOSED control and verification of the OPEN and CLOSED state, switch group type 7. In the above configuration, the $CON_{OFF/CL}CM$ is activated. The $CON_{OFF/CL}CM$ controls a normally open contactor for the pressure switch power line. When the $CON_{OFF/CL}CM$ is activated, the normally open contactor is closed. When the contactor closes, power is supplied to the pressure switch, which cuts the airflow to the damper, closing the damper. When the $CON_{OFF/CL}CM$ is deactivated, the EMS is free to control the damper. The EMS is currently being overridden by the $CON_{OFF/CL}CM$. When power is supplied to the pressure switch, the damper closes. When the damper completely closes, the damper closed limit switch is CLOSED and the damper open limit switch is OPEN, indicating that the damper is in the CLOSED position. The $VER_{OFF/CL}MM$ monitors the CLOSED position of the damper closed limit switch and the $VER_{ON/OP}MM$ monitors the CLOSED position of the damper open limit switch. In this case the $VER_{OFF/CL}MM$ is activated and the $VER_{ON/OP}MM$ is deactivated because the damper is CLOSED.

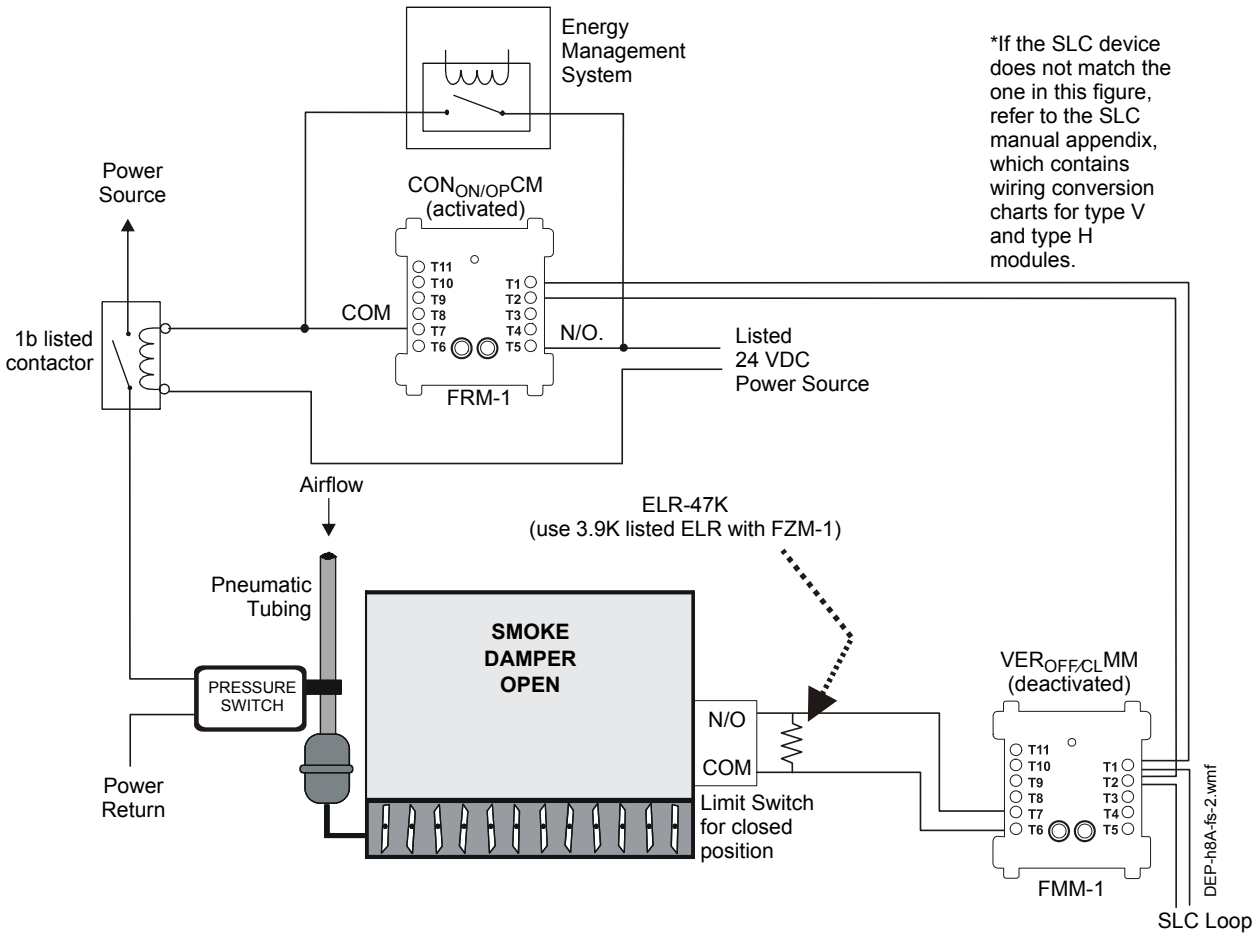

Figure 5.74 EP Damper Control - HVAC Switch Group Type 8

Figure 5.74 depicts an EP damper in an HVAC system with the capability of OPEN control, switch group type 8. In the above configuration, the $CON_{ON/OP}$ CM is activated. The $CON_{ON/OP}$ CM controls a normally closed contactor for the pressure switch power line. When the $CON_{ON/OP}$C M is activated, the normally closed contactor is opened. When the contactor opens, power is cut from the pressure switch, which allows airflow to open the damper. When the $CON_{ON/OP}$ CM is deactivated, the EMS is free to control the damper. The EMS is currently being overridden by the $CON_{ON/OP}$ CM.

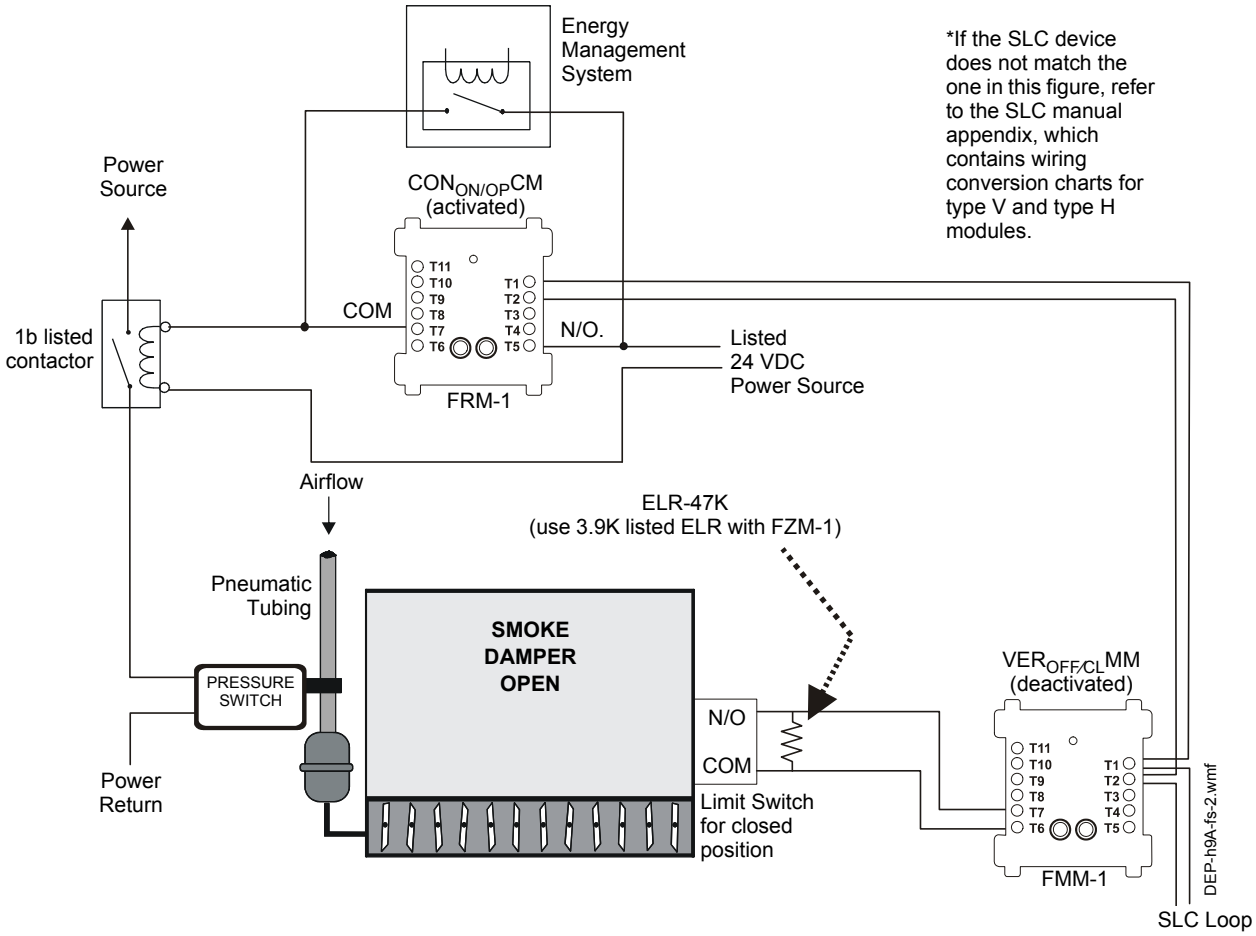

Figure 5.75 EP Damper Control - HVAC Switch Group Type 9

Figure 5.75 depicts an EP damper in an HVAC system with the capability of OPEN control and verification of the CLOSED state, switch group type 9. In the above configuration, the $CON_{ON/OP}CM$ is activated. The $CON_{ON/OP}CM$ controls a normally closed contactor for the pressure switch power line. When the $CON_{ON/OP}CM$ is activated, the normally closed contactor is opened. When the contactor opens, power is cut from the pressure switch, which allows airflow to open the damper. When the $CON_{ON/OP}CM$ is deactivated, the EMS is free to control the damper. The EMS is currently being overridden by the $CON_{ON/OP}CM$.

When power is cut from the pressure switch, the damper opens. When the damper completely opens, the damper open limit switch is CLOSED and the damper closed limit switch is OPEN, indicating that the damper is in the OPEN position. The $VER_{OFF/CL}MM$ monitors the CLOSED position of the damper closed limit switch. In this case the $VER_{OFF/CL}MM$ is deactivated because the damper is OPEN.

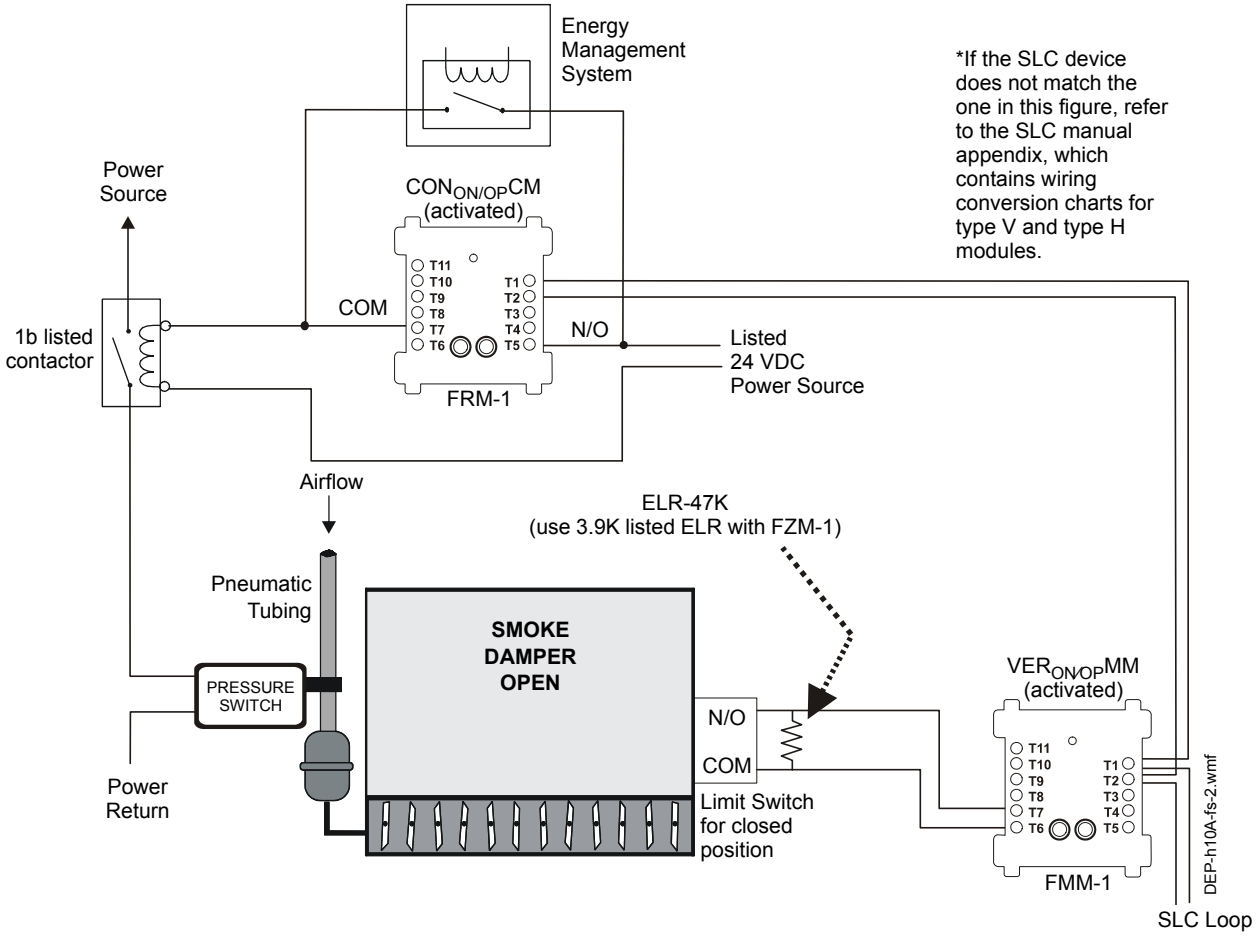

Figure 5.76 EP Damper Control - HVAC Switch Group Type 10

Figure 5.76 depicts an EP damper in an HVAC system with the capability of OPEN control and verification of the OPEN state, switch group type 10. In the above configuration, the $CON_{ON/OP}CM$ is activated. The $CON_{ON/OP}CM$ controls a normally closed contactor for the pressure switch power line. When the $CON_{ON/OP}CM$ is activated, the normally closed contactor is opened. When the contactor opens, power is cut from the pressure switch which allows airflow to open the damper. When the $CON_{ON/OP}CM$ is deactivated, the EMS is free to control the damper. The EMS is currently being overridden by the $CON_{ON/OP}CM$.

When power is cut from the pressure switch, the damper opens. When the damper completely opens, the damper open limit switch is CLOSED and the damper closed limit switch is OPEN, indicating that the damper is in the OPEN position. The $VER_{ON/OP}MM$ monitors the CLOSED position of the damper open limit switch. In this case the $VER_{ON/OP}MM$ is activated because the damper is OPEN.

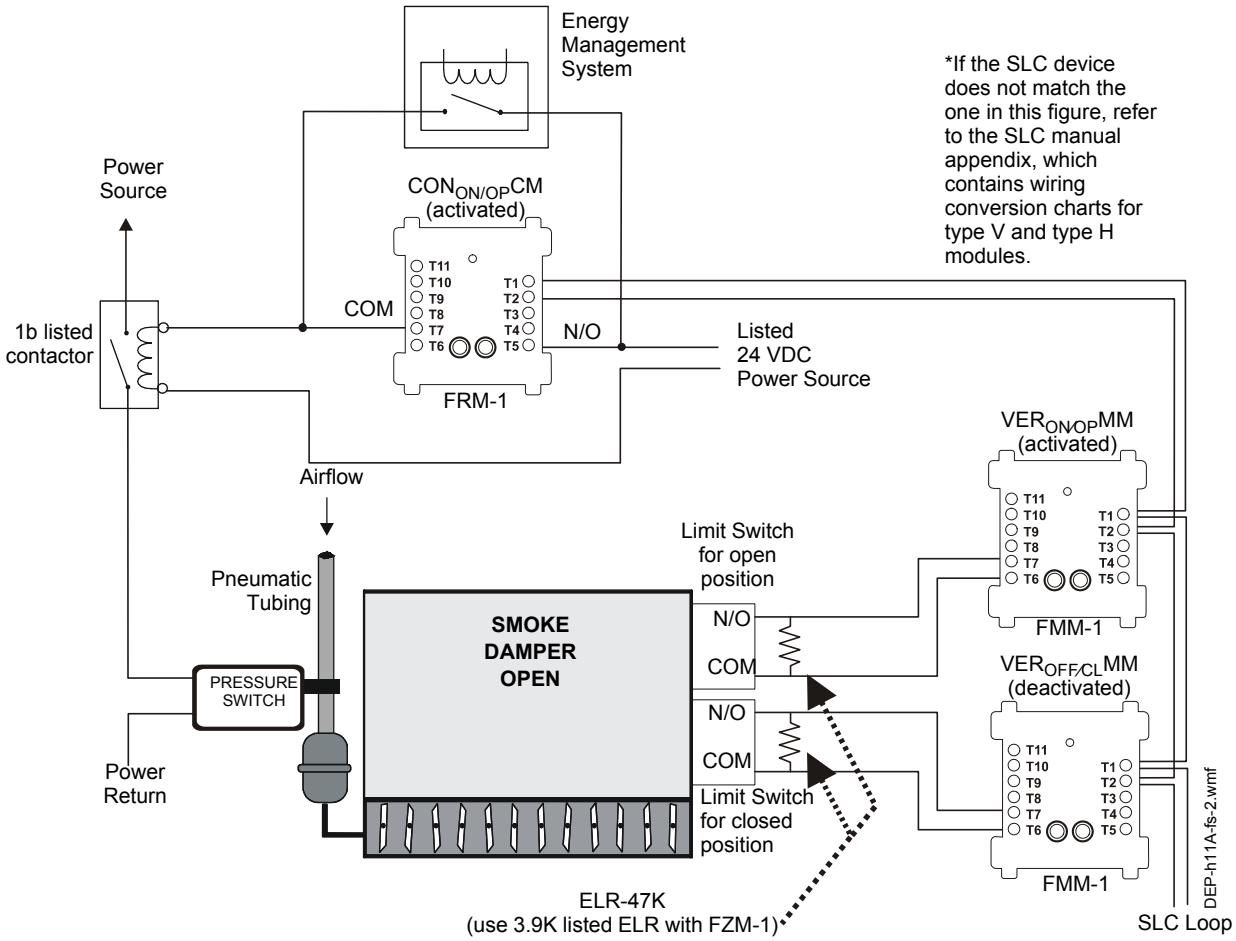

Figure 5.77 EP Damper Control - HVAC Switch Group Type 11

Figure 5.77 depicts an EP damper in an HVAC system with the capability of OPEN control and verification of the OPEN and CLOSED state, switch group type 11. In the above configuration, the $CON_{ON/OP}CM$ is activated. The $CON_{ON/OP}CM$ controls a normally closed contactor for the pressure switch power line. When the $CON_{ON/OP}CM$ is activated, the normally closed contactor is opened. When the contactor opens, power is cut from the pressure switch which allows airflow to open the damper. When the $CON_{ON/OP}CM$ is deactivated, the EMS is free to control the damper. The EMS is currently being overridden by the $CON_{ON/OP}CM$.

When power is cut from the pressure switch, the damper opens. When the damper completely opens, the damper open limit switch is CLOSED and the damper closed limit switch is OPEN, indicating that the damper is in the OPEN position. The $VER_{ON/OP}MM$ monitors the CLOSED position of the damper open limit switch and the $VER_{OFF/CL}MM$ monitors the CLOSED position of the damper closed limit switch. In this case the $VER_{ON/OP}MM$ is activated and the $VER_{OFF/CL}MM$ is deactivated because the damper is OPEN.

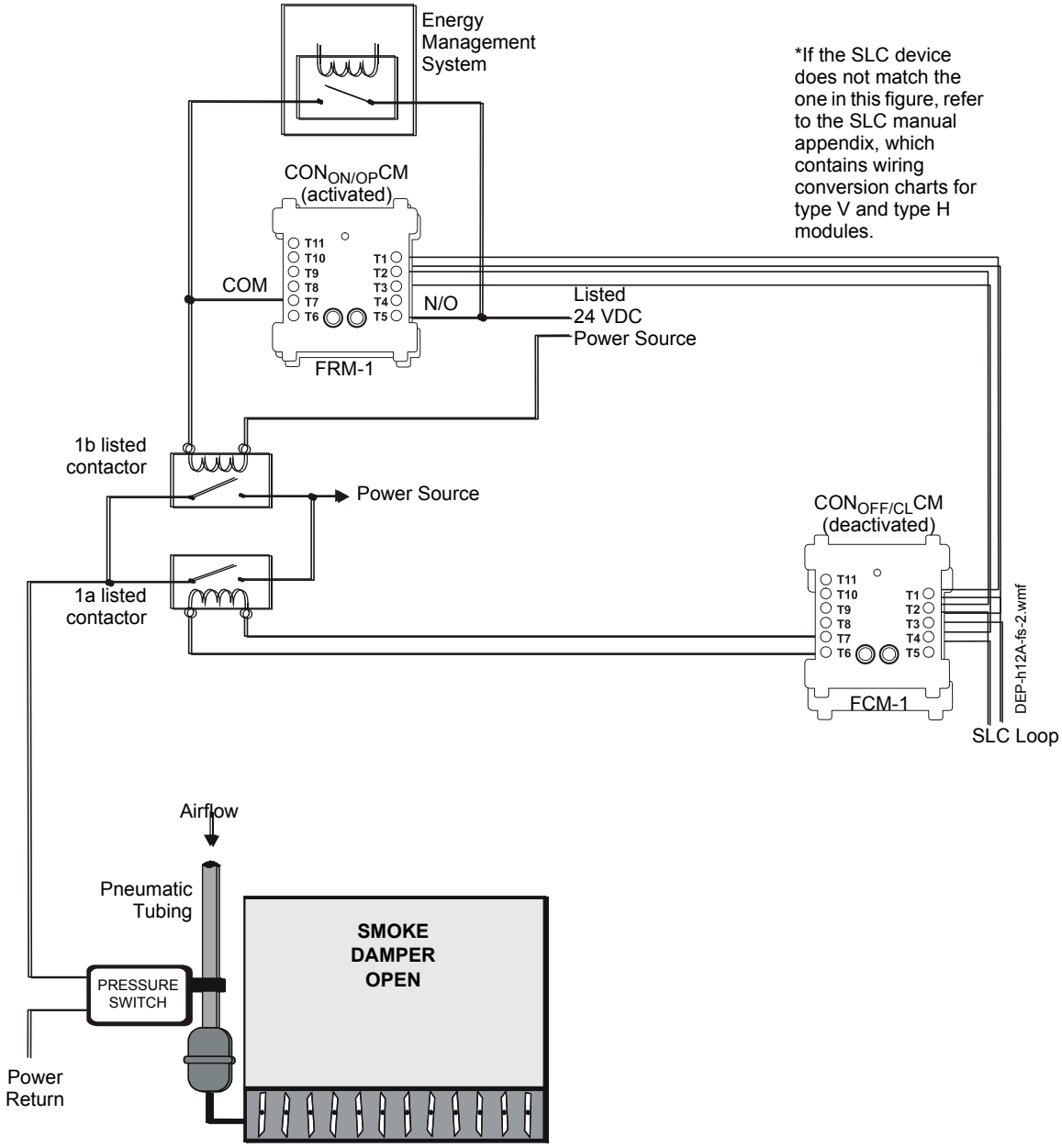

Figure 5.78 EP Damper Control - HVAC Switch Group Type 12

Figure 5.78 depicts an EP damper in an HVAC system with the capability of OPEN and CLOSED control, switch group type 12. In the above configuration, the $CON_{ON/OP}CM$ is activated and the $CON_{OFF/CL}CM$ is deactivated. The $CON_{ON/OP}CM$ controls normally closed contactor for the pressure switch power line. When the $CON_{ON/OP}CM$ is activated, the normally closed contactor is opened. When the contactor opens, power is cut from the pressure switch which allows airflow to open the damper. When the $CON_{ON/OP}CM$ is deactivated, the EMS is free to control the damper. The EMS is currently being overridden by the $CON_{ON/OP}CM$.

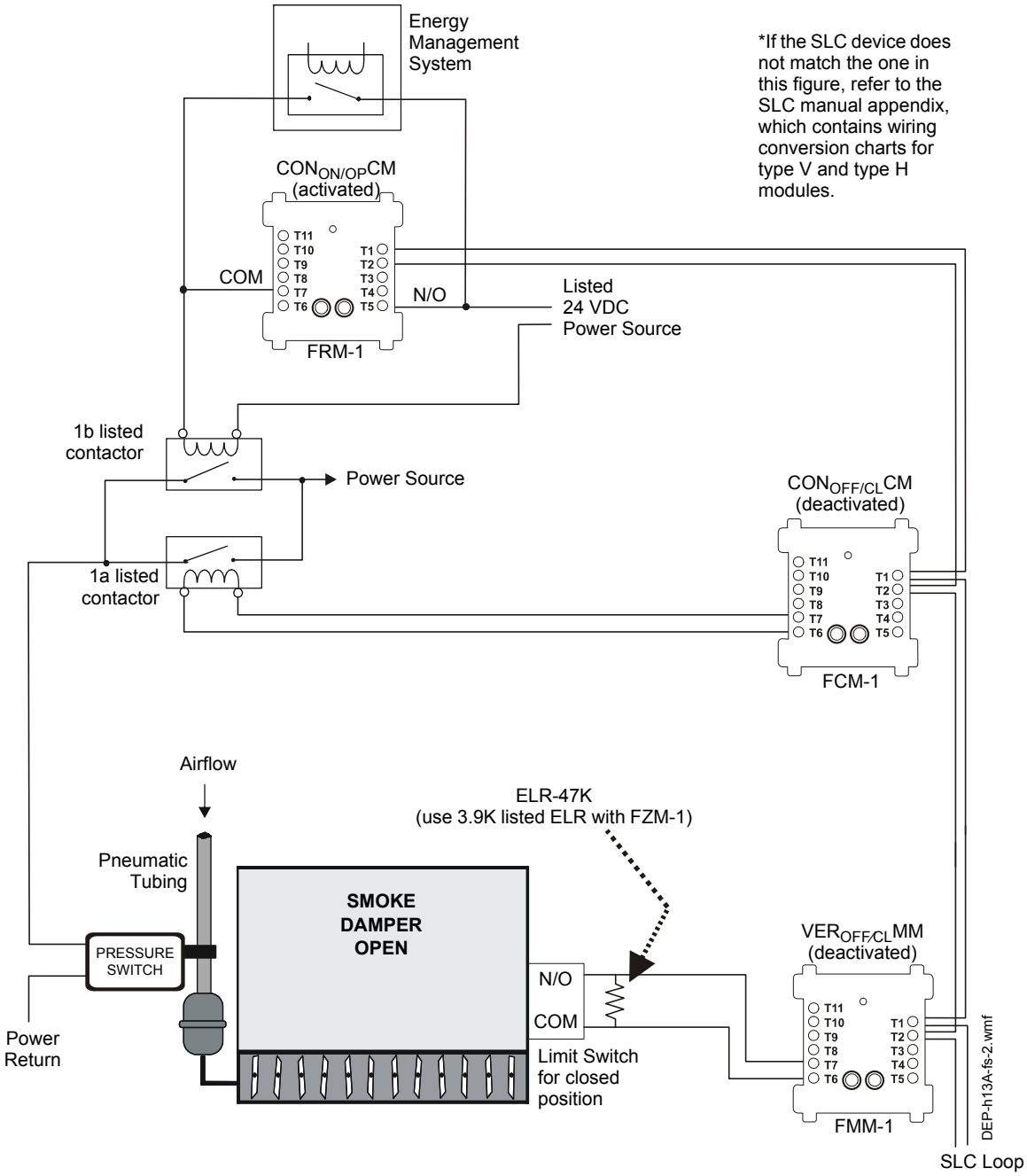

Figure 5.79 EP Damper Control - HVAC Switch Group Type 13

Figure 5.79 depicts an EP damper in an HVAC system with the capability of OPEN and CLOSED control and verification of the CLOSED state, switch group type 13. In the above configuration, the $CON_{ON/OP}CM$ is activated and the $CON_{OFF/CL}CM$ is deactivated. The $CON_{ON/OP}CM$ controls a normally closed contactor for the pressure switch power line. When the $CON_{ON/OP}CM$ is activated, the normally closed contactor is opened. When the contactor opens, power is cut from the pressure switch, which allows airflow to open the damper. When the $CON_{ON/OP}CM$ is deactivated, the EMS is free to control the damper. The EMS is currently being overridden by the $CON_{ON/OP}CM$.

When power is cut from the pressure switch, the damper opens. When the damper completely opens, the damper open limit switch is CLOSED and the damper closed limit switch is OPEN, indicating that the damper is in the OPEN position. The $VER_{OFF/CL}MM$ monitors the CLOSED position of the damper closed limit switch. In this case the $VER_{OFF/CL}MM$ is deactivated because the damper is OPEN.

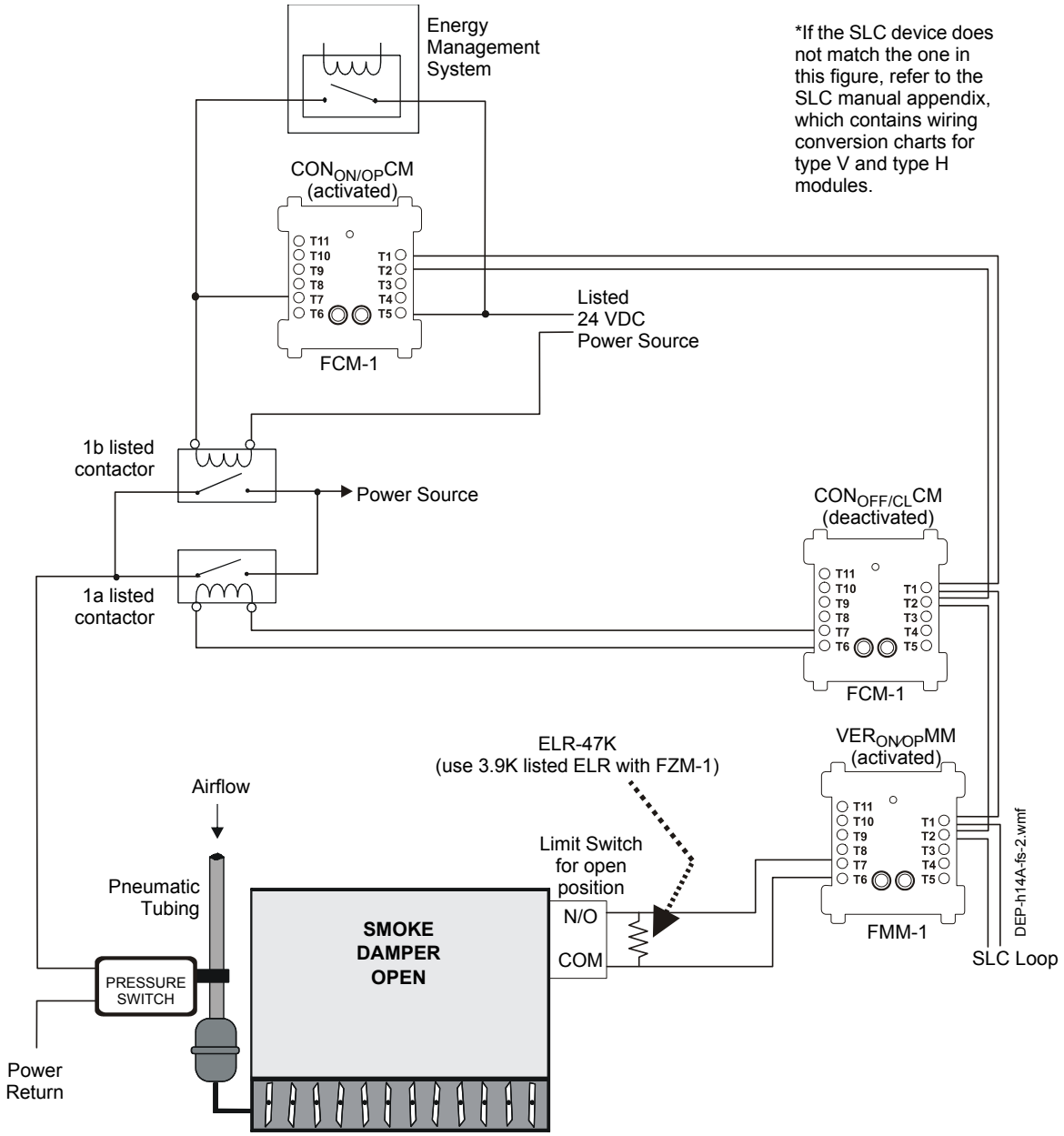

Figure 5.80 EP Damper Control - HVAC Switch Group Type 14

Figure 5.80 depicts an EP damper in an HVAC system with the capability of OPEN and CLOSED control and verification of the OPEN state, switch group type 14. In the above configuration, the $CON_{ON/OP}CM$ is activated and the $CON_{OFF/CL}CM$ is deactivated. The $CON_{ON/OP}CM$ controls a normally closed contactor for the pressure switch power line. When the $CON_{ON/OP}CM$ is activated, the normally closed contactor is opened. When the contactor opens, power is cut from the pressure switch, which allows airflow to open the damper. When the $CON_{ON/OP}CM$ is deactivated, the EMS is free to control the damper. The EMS is currently being overridden by the $CON_{ON/OP}CM$.

When power is cut from the pressure switch, the damper opens. When the damper completely opens, the damper open limit switch is CLOSED, indicating that the damper is in the OPEN position. The $VER_{ON/OP}MM$ monitors the CLOSED position of the damper open limit switch In this case the $VER_{ON/OP}MM$ is activated because the damper is OPEN.

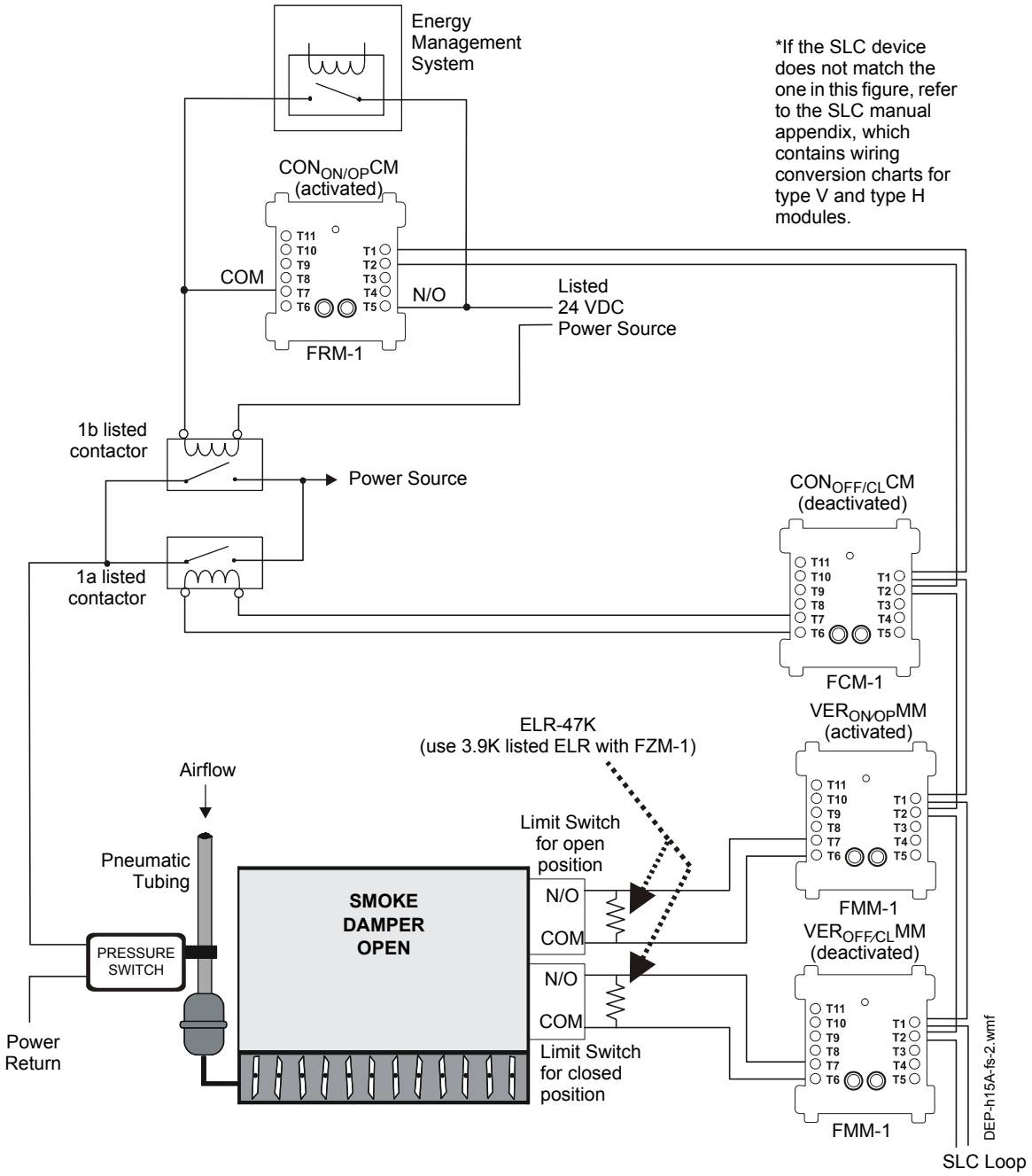

Figure 5.81 EP Damper Control - HVAC Switch Group Type 15

Figure 5.81 depicts an EP damper in an HVAC system with the capability of OPEN and CLOSED control and verification of the OPEN and CLOSED state, switch group type 15. In the above configuration, the $CON_{ON/OP}CM$ is activated and the $CON_{OFF/CL}CM$ is deactivated. The $CON_{ON/OP}CM$ controls a normally closed contactor for the pressure switch power line. When the $CON_{ON/OP}CM$ is activated, the normally closed contactor is opened. When the contactor opens, power is cut from the pressure switch, which allows airflow to open the damper. When the $CON_{ON/OP}CM$ is deactivated, the EMS is free to control the damper. The EMS is currently being overridden by the $CON_{ON/OP}CM$.

When power is cut from the pressure switch, the damper opens. When the damper completely opens, the damper open limit switch is CLOSED and the damper closed limit switch is OPEN, indicating that the damper is in the OPEN position. The $VER_{ON/OP}MM$ monitors the CLOSED position of the damper open limit switch and the $VER_{OFF/CL}MM$ monitors the CLOSED position of the damper closed limit switch. In this case the $VER_{ON/OP}MM$ is activated and the $VER_{OFF/CL}MM$ is deactivated because the damper is OPEN.

Appendix A: AM2020/AFP1010 Control-By-Event

A.1 Introduction

Control-By-Event (CBE) Programming is used to provide a variety of responses based on various combinations of events (initiating conditions). The Control-By-Event Programming controls the interaction between the alarm initiating devices, the internal software zones, and the alarm notification appliances associated with an AM2020/AFP1010/INA.

NOTE: A software zone is not a physical zone, but rather a software grouping in control panel memory.

A.2 Lists and Equations

Control-By-Event Programming can be accomplished in two ways, via the List and the Equation. Lists are used for initiating devices (detectors and monitor modules) and forward activating zones, whereas Equations are used for output devices (control modules) and reverse activating zones.

When an initiating device or forward-activating zone is programmed with a List, the AM2020/AFP1010 activates all the items, called Operands, in the list when activation of the device or zone occurs. The operands listed for an initiating device can be notification modules and/or software zones (forward or reverse activating). For a forward activating zone, the operands can be forward zones that are higher than its address, reverse activating zones and/or notification modules.

Example: A photoelectric detector has a List of (L1M1 L2M2), where L1M1 and L2M2 are control modules. When the detector is in alarm, all the items in the Control-By-Event List are enabled so both control modules are activated.

The real power of the CBE Programming comes from the Equation, which is evaluated by the control panel to determine a variety of alarm initiating conditions. The Equation provides the real decision-making ability through the use of an operator acting on a set of operands. The operands for an output module can be initiating devices, software zones (forward or reverse-activating), or control modules assigned an address lower than its own. For a reverse-activating zone, the operands can be initiating devices, forward zones, or reverse zones that are lower than its address.

The format for an Equation is shown below, where the operators are OR, AND, NOT, XZONE, DEL, SDEL, and TIM; and the operands are groupings of initiating devices and/or software zones, as well as information specific to the format of individual operators.

Operator(- - - - Operands - - - -)

Examples:

OR(Z9 Z15 Z23)

AND(L1D1 Z3 L1D35 L1D72)

NOT(Z23)

XZONE(Z23)

DEL(HH.MM.SS HH.MM.SS (L1M1))

SDEL(HH.MM.SS HH.MM.SS (Z1))

TIM(SU MO TU WE TR FR SA HH.MM HH.MM)

All of the operator formats above are explained in detail on the following pages.

A.2.1 Control-By-Event Programming Constraints

- There can only be one DEL or SDEL operator in a control-by-event equation, not both.
- If there is no duration time field in a DEL or SDEL, the equation will always be activated.
- The maximum value of DELAY TIME + DURATION TIME is 255:59:59.
- If either the day, month or year field is omitted, that field is assumed to be all allowable values of the field omitted. Example: 12--90 is equivalent to any day in December 1990.
- The HH.MM field for START TIME and STOP TIME uses military time.
- The HH.MM field for STOP TIME must be greater than the START TIME.
- The maximum value of START TIME or STOP TIME is 24:00.
- If an alarm condition occurs, all active TIM devices will be deactivated. All TIM equations will be ignored until all alarms are restored, at which point all TIM devices will return to their proper state.

NOTE: Software Zone 240 is used to activate FSCS mode priority for AM2020/AFP1010 Revision 4.0 Software or later. Once this zone is activated, subsequent automatic events will be locked out. Smoke control operation can only be overridden manually. Each smoke detector input that will lock out the system must be mapped to Z240. Inputs that should not activate lockout, such as pull stations, should not be mapped to Zone 240.

A.3 Operators

OR

Operator: The first (and most useful) operator is OR.

Equation: OR(Z9 Z15 Z23)

If ANY one of the three operands in the equation are in alarm, then the control module will be activated.

IF Software Zone 9 is in alarm OR

IF Software Zone 15 is in alarm OR

IF Software Zone 23 is in alarm,

THEN this control module will be activated.

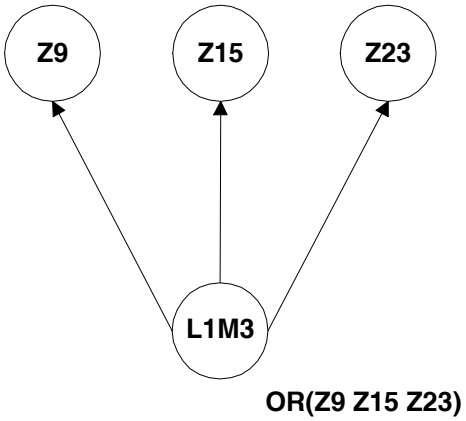

AND

Operator: The AND operator requires that each operand be in alarm.

Equation: AND(Z9 Z15 Z23)

ALL three operands in the equation MUST be in alarm for the control module to be activated.

IF Software Zone 9 is in alarm AND

IF Software Zone 15 is in alarm AND

IF Software Zone 23 is in alarm,

THEN this control module will be activated.

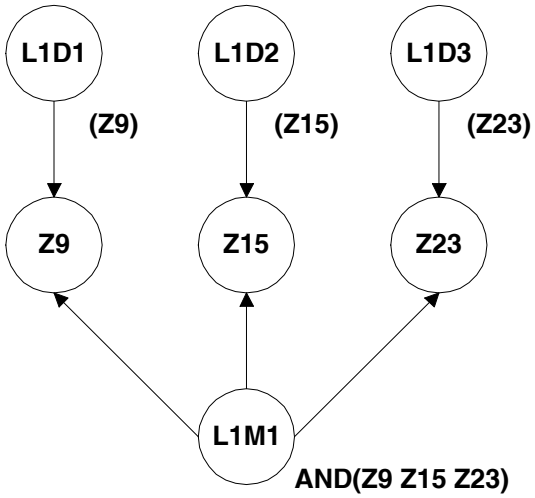

NOT

Operator: The NOT operator inverts the state of the operand (activated to deactivated OR deactivated to activated).

Equation: NOT(Z2)

The control module will remain activated UNTIL the operand comes into alarm.

IF Software Zone 2 is in alarm,

THEN this control module will be deactivated.

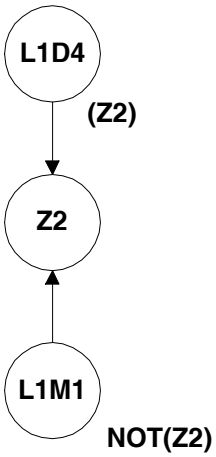

XZONE

Operator: For *Cross Zone* operation, the XZONE operator is used.

Equation: XZONE(Z23)

IF ANY combination of TWO or more initiating devices (L1D1, L1D2, L1D3, L1D4) that have been programmed (Control-By-Event) to this software zone (Z23) come into alarm,

THEN this control module will be activated.

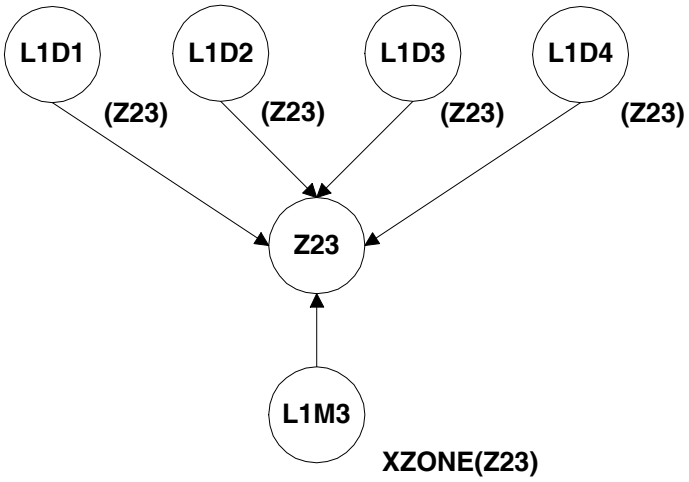

DEL

Operator: For delayed operation, the DEL operator is used.

Equation: DEL(HH.MM.SS HH.MM.SS (Z1))

Delay — Duration *(optional)* — Internal Equation

Example:

L1M3 activates Forward Activating Zone 223 (Z223).

L1M2 CBE is: DEL(00.00.30 00.01.30 (Z223))

IF Z223 has been active for 30 seconds

THEN L1M2 will become active. L1M2 will stay active for 1 minute and 30 seconds.

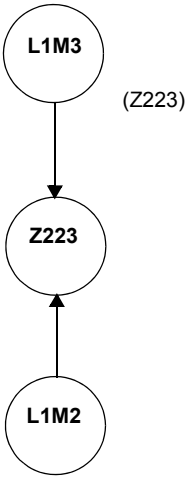

Time line

```
0:00      0:30      1:00      1:30      2:00      2:30
+---------+---------+---------+---------+---------+
Z223      L1M2                          L1M2
active    active                        inactive
```

NOTE:

1. The entire DEL equation consumes at least 11 bytes (including a 3-byte internal equation). The internal equation can be a complex equation many bytes in size.
2. If a delay of zero is entered (00.00.00), the equation will evaluate true as soon as the internal equation evaluates true and will remain that way for the specified duration, unless the internal equation becomes false.
3. If no duration is specified, then the device will not be deactivated until a reset occurs or the internal equation evaluates false.

SDEL

Operator: The SDEL operator is also used for delayed operation. This is a latched version of the DEL operator. Once the equation evaluates True, it remains activated until a reset, even if the internal equation becomes false.

Equation: SDEL(HH.MM.SS HH.MM.SS (Z1))

Delay — Duration *(optional)* — Internal Equation

Example: If Z223 CBE is: SDEL(00.00.30 00.01.30 (L1M1))

IF L1M1 has been active for 30 seconds

THEN Z223 will become active. Z223 will stay active for 1 minute and 30 seconds.

Time line

```
0:00      0:30      1:00      1:30      2:00      2:30
+---------+---------+---------+---------+---------+
L1M1      Z223                          Z223
active    active                        inactive
```

NOTE:

1. The entire SDEL equation consumes at least 11 bytes (including a 3-byte Internal Equation). The Internal Equation can be a complex equation many bytes in size.
2. If a delay of zero is entered (00.00.00), the equation will evaluate true as soon as the Internal Equation evaluates True and will remain that way for the specified duration.
3. If no duration is specified, then the device will not deactivate until reset.

TIM

Operator: The TIM operator is used to specify activation on specific days of the week or year.

Equation: TIM(SU MO TU WE TR FR SA HH.MM HH.MM)
(Type 1)

Activation Day *(optional)* — Start Time *(optional)* — Stop Time *(optional)*

Example: If Z221 CBE is: TIM(SA SU 7.30 13.59)

Zone Z221 will be active on Saturdays and Sundays from 7:30AM to 1:59PM.

Equation: TIM(MM-DD-YY HH.MM HH.MM)
(Type 2)

Activation Date *(optional)* — Start Time *(optional)* — Stop Time *(optional)*

Examples: If Z222 CBE is: TIM(7-4-)

Zone Z222 will be active on July 4th for every year.

If Z222 CBE is: TIM(12-25- 9.00 17.00)

Zone Z222 will be active on December 25th for every year from 9:00AM to 5:00PM.

A.4 Size Limitations

Each Control-By-Event has a physical size limitation of 14 bytes in control panel memory.

For initiating devices, the Control-By-Event size can be calculated by the following formula:

Size in bytes = 2 + (Number of Zones) + (Number of Control Modules X 3)

Example: The following Control-By-Event takes up 11 bytes in memory.

		(Z1 Z6 Z12 L2M4 L7M15)			
Size in bytes	2 +	(3)	+	(2 X 3)	= 11

For notification devices, the Control-By-Event size can be calculated by adding the components involved using the following values:

(= 1 byte
) = 1 byte
OR(= 1 byte
AND(= 1 byte
NOT(= 1 byte
XZONE(= 1 byte
DEL(= 1 byte
TIM(= 1 byte
SDEL(= 1 byte
Zones = 1 byte each
Initiating devices = 3 bytes each
The time specifications for the DEL, TIM, and SDEL operators = 6 bytes

Examples:

1. The following Control-By-Event takes up 13 bytes in memory:

	OR(	Z1	Z4	Z9	Z16	Z23	L1D3	L2M7	)	
Size in bytes	1	+ 1	+ 1	+ 1	+ 1	+ 1	+ 3	+ 3	+ 1	= 13

2. The following CBE takes up 11 bytes in memory:

	DEL(	00.00.30 00.01.30	(	Z1	)	)		
Size in bytes	1	+ 6	+1	+1	+1	+1	=	11

Due to the 14-byte size limitation, it may be necessary to use more than one Equation or List to accomplish a desired result. Through the use of reverse activating zones, an equation which normally would contain too many bytes can be broken up into several smaller equations.

In the example below, a control module is to be activated by any one of 14 software zones:

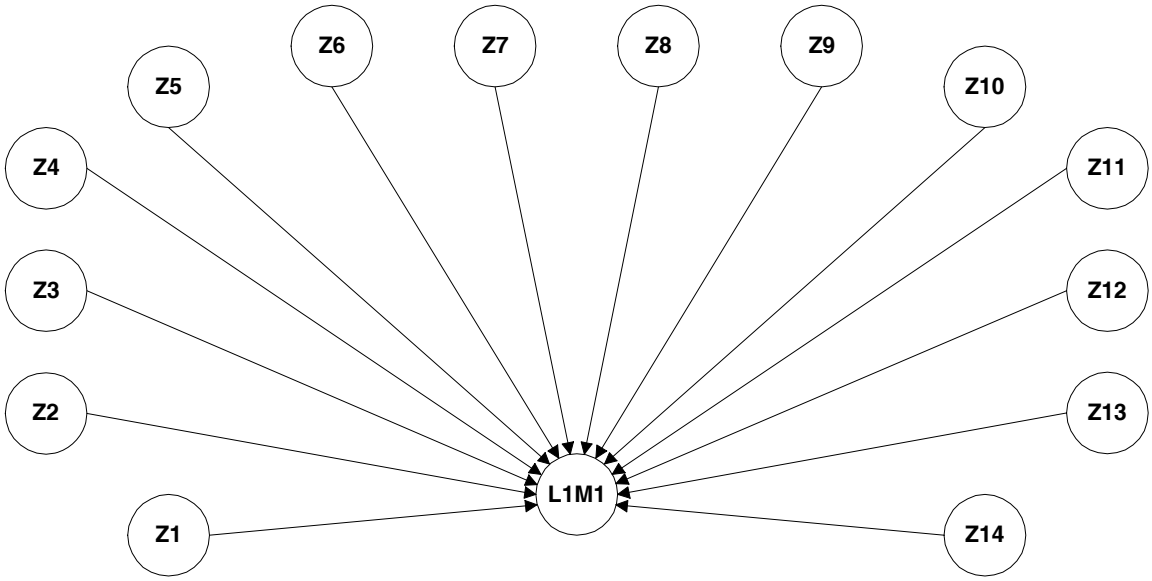

CBE Equation for **L1M1**:

OR(Z1 Z2 Z3 Z4 Z5 Z6 Z7 Z8 Z9 Z10 Z11 Z12 Z13 Z14)

1 + 1 + 1 + 1 + 1 + 1 + 1 + 1 + 1 + 1 + 1 + 1 + 1 + 1 + 1 + 1 = 16 Bytes
(too many)

By using two reverse-activating zones, the equation with 15 bytes is broken into two smaller Equations and the CBE for the control module uses the two reverse-activating zones as its operands.

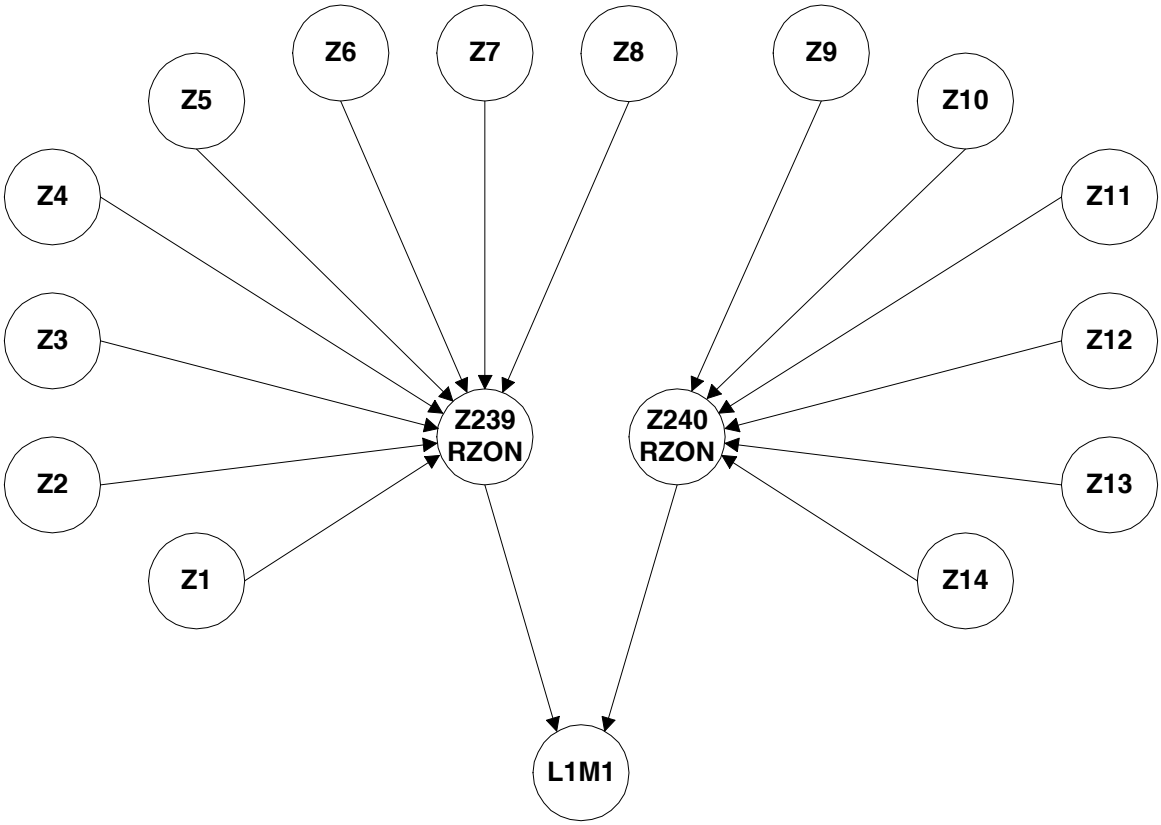

CBE Equation for **Z238**:
OR(Z1 Z2 Z3 Z4 Z5 Z6 Z7 Z8)
= 10 Bytes

CBE Equation for **Z239**:
OR(Z9 Z10 Z11 Z12 Z13 Z14)
= 8 Bytes

CBE Equation for **L1M1**:
OR(Z238 Z239)
= 4 Bytes

A.5 The Null Control-By-Event

The simplest type of Control-By-Event is the Null, which means empty.

For initiating devices, the Null is denoted by entering ( ) as the Control-By-Event.

In response to an alarm on a device programmed with a Null Control-By-Event, the AM2020/AFP1010 will do the following:

- Initiate a System Alarm condition (Alarm LED flashes, piezo chirps and the Form-C alarm contacts on the CPU will be activated).
- Activate no control modules or software zones (no notification appliances will sound and no output relays will be activated due to the fact that there are no entries in the Control-By-Event for this initiating device).

For Output Devices, the Null is denoted by entering OR( ) or ( )

Programming Shortcut: Entering (is equivalent to entering OR(

A control module programmed with a Null Control-By-Event will not be activated unless it is included in the Control-By-Event of a software zone or initiating device.

Example - Resetting 4-wire smoke detectors:

A control module is needed to reset power to 4-wire smoke detectors in an AM2020/AFP1010 system- 9This module must not be activated in response to an alarm condition. Rather, this module must only be activated during system reset. This can be accomplished by assigning the module a Null Control-By-Event and the Software Type ID PWRC (the control panel automatically resets modules with type PWRC upon system reset).

A.6 Programming Examples

Options

The example below illustrates three ways to accomplish the simple programming task of programming a Notification Appliance (control module) on SLC Loop 1 to indicate activation of an Initiating Device (smoke detector) also on SLC Loop 1.

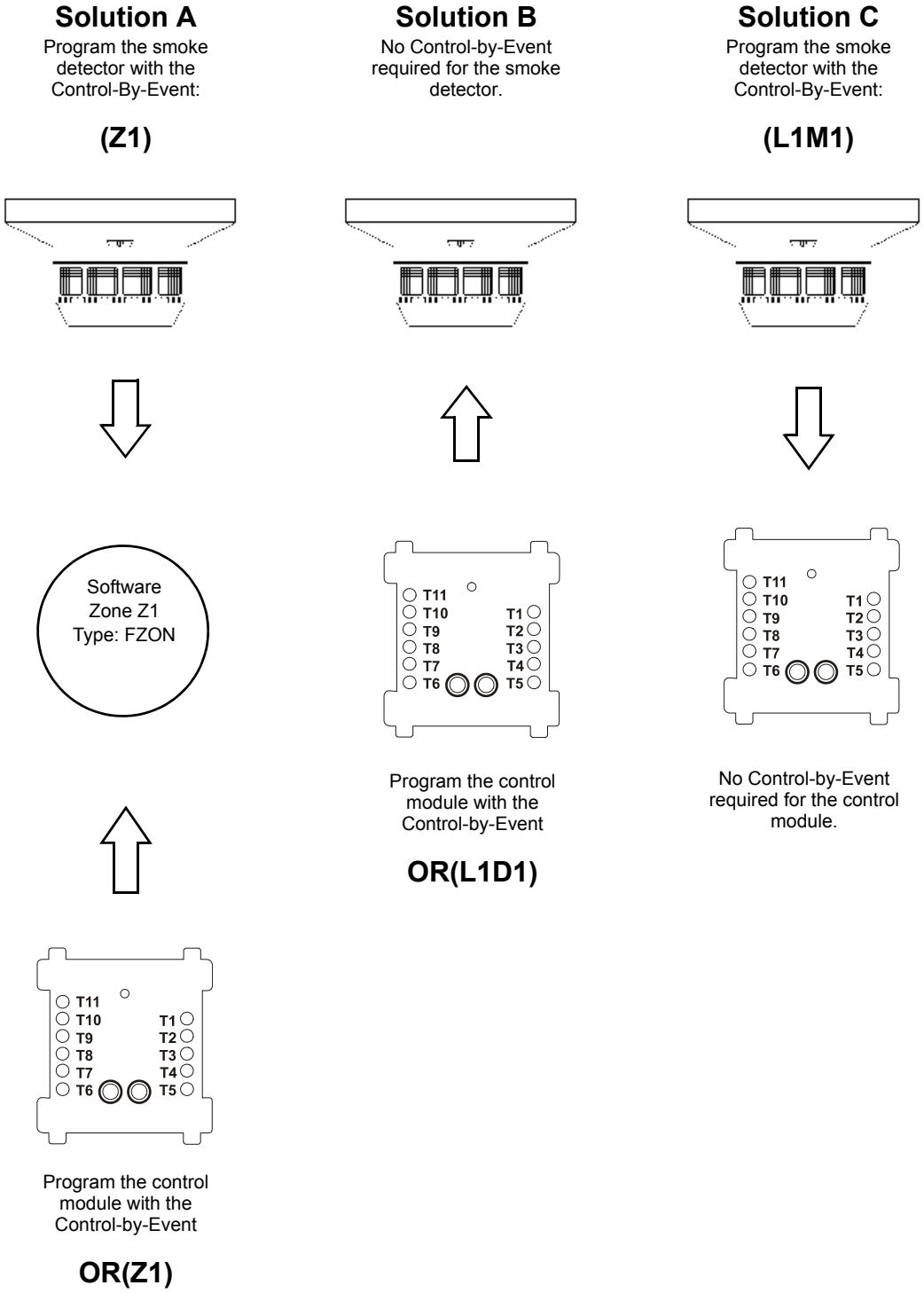

Example # 1

L1D1, L1D2, and L1D3 are first floor smoke detectors that activate Z1. L1D4 is a first floor elevator lobby smoke detector that activates Z2. If Z1 activates, control module L1M1 and L1M4 will activate. Control module L1M1 could be used to close the supply damper to the floor during a fire condition. If Z2 activates then control module L1M4 will activate. Control module L1M4 could be used to turn on a fan to pressurize the elevator shaft. The equation AND(Z1 Z238) requires both to be active for an output. Because reverse Zone 238 has a NOT operand, it is active as long as L1D4 is inactive. So if there is smoke on the floor but not in the elevator lobby, Z239 activates and control module L1M2 is active.

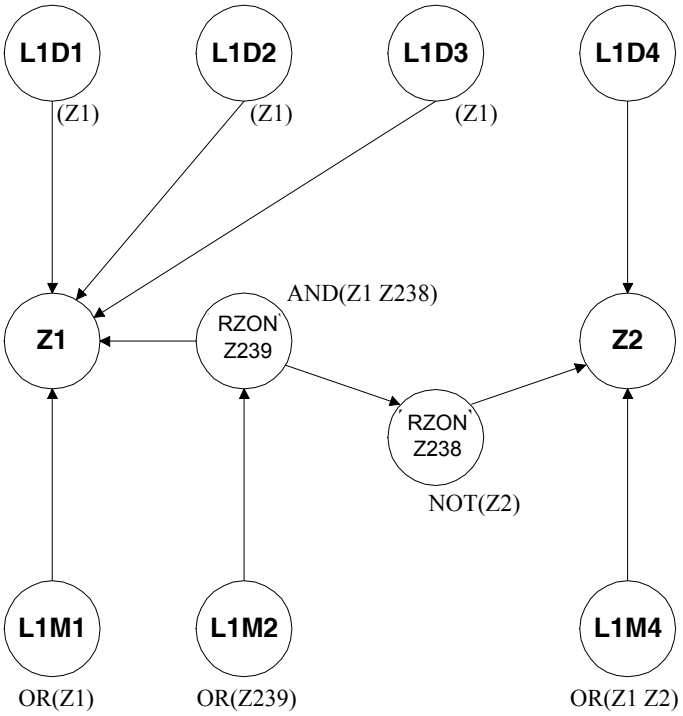

Example # 2: General Alarm

L1D1 activates L1M1 through Z1. L1D2 activates L1M2 through Z2. L1D3 and L1D4 activate L1M4 through Z3. L1M3 will activate when reverse zone 239 is activated. Z239 will activate when Z1, Z2 or Z3 are activated.

Notification Appliance L1M3 serves as the General Alarm device. It will be activated whenever an alarm occurs on any initiating device in the system, due to the fact that all initiating devices activate a Software Zone, and activation of any zone activates software zone Z239.

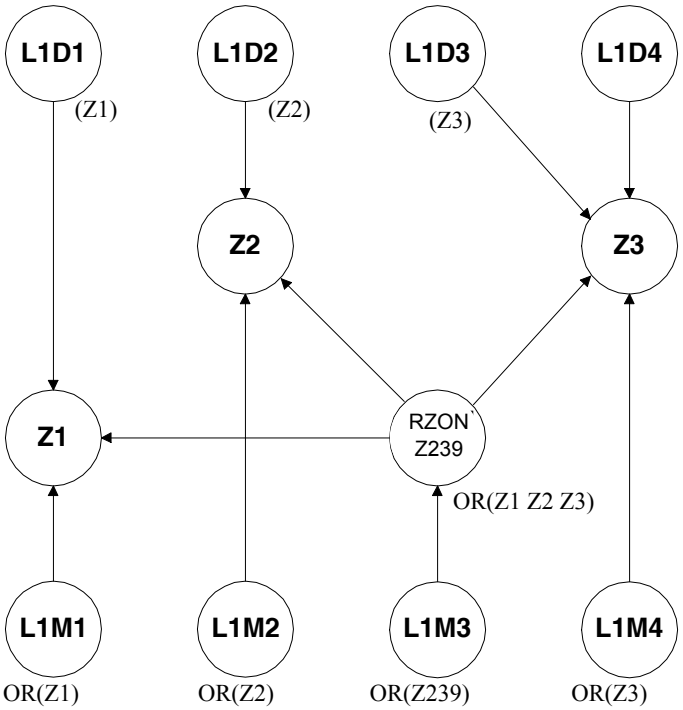

Example # 3

L1D1 activates Z1. L1M1 turns on when Z1 is active. L1D2 is a null equation. L1M2 activates with L1D2 after a ten minute delay. Z238 is active July 4th of every year. L1M3 will activate when Z1 and Z238 are active. Z239 is active when Z1 is on after a one minute delay and will stay on for 5 minutes. L1M4 turns on when Z239 is active.

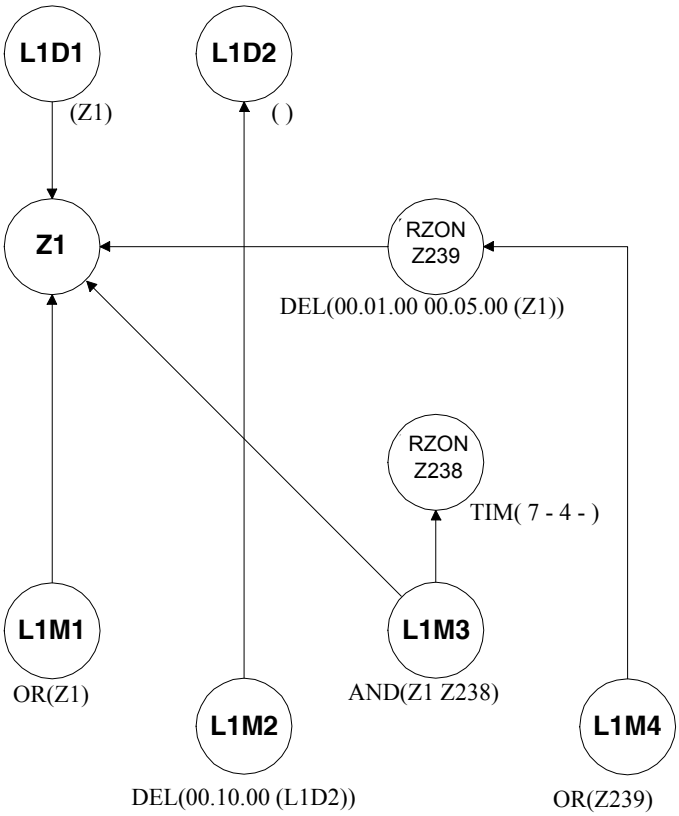

Example # 4: Fire Floor, Floor Above, Floor Below

L1D1 activates Z1 and Z2. L1D2 activates Z1, Z2 and Z3. L1D3 activates Z2, Z3 and Z4. L1M1 will activate when Z1 is active. L1M2 will activate when Z2 is active. L1M3 will activate when Z3 is active. L1M4 will activate when Z4 is active.

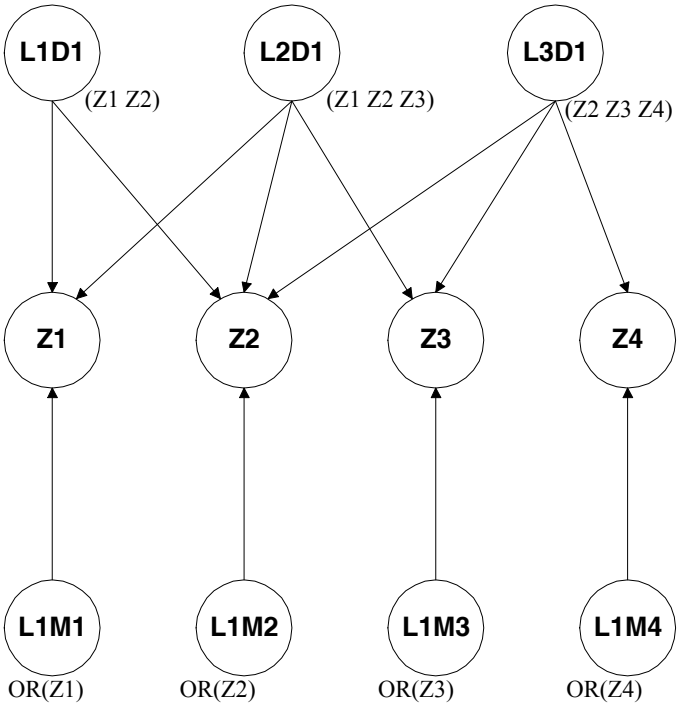

Appendix B: Miscellaneous Information

B.1 NFS-320 and NFS2-640 Control-By-Event

Your fire alarm control panel provides control-by-event (CBE) programming for the Smoke Control System. Logic and Trouble Equations can define complex relationships between input and output devices. Program your NFS-320 or NFS2-640 according to the instructions in the panel's Listing Document. For additional documentation on this product, go to http://esd.notifier.com. This additional documentation may be used as a reference only.

B.2 NFS2-3030 Control-By-Event

Your fire alarm control panel provides control-by-event (CBE) programming for the Smoke Control System. Logic and Trouble Equations can define complex relationships between input and output devices. Program your NFS2-3030 according to the instructions in the panel's Listing Document. For additional documentation on this product, go to http://esd.notifier.com. This additional documentation may be used as a reference only.

B.3 NCA-2 Operation

NCA-2 V21 supports logic equations that can be used with SCS-8/8L V4.0. See the NCA-2 Manual for instructions

B.4 Appendix D SCS⁄SCE Worksheets

The Worksheets provided in the section should be used to organize information required for the design of a smoke control system. These worksheets should be kept as originals and copies should be made as needed.

Worksheet One is used to determine the number of fans and dampers that will be used for smoke control, their capabilities, and associated switch group type. The information from this sheet will help the designer configure the switch group types to the SCS. Once the configuration of each SCS⁄SCE is determined, the information on Worksheet Two can be completed.

Worksheet Two is used to organize information for each SCS or SCS⁄SCE pair. The majority of this information will be used when programming the FACP for smoke control.

Worksheet Three is used to organize information associated with the control and monitor modules that will be used for smoke control. This information should be organized and completed prior to beginning programming of the FACP.

B.5 Compatibility with Other Systems

XLS3000 System

All smoke control modules described in this book are XLS3000 system compatible. Installation, programming and operation are as described in this manual. For programming, refer to the NFS2-3030 programming sections in this manual.

Appendix C: Special Applications

The features discussed in this appendix were introduced with SCS Manual 15712 Revision J. To use the new features on SCS V4.0, NFS2-3030 and/or NCA-2 must be running software V21 or higher.

C.1 Mode A Operation

Mode A" is classic SCS operation as described in Section 3 of this manual. This mode is compatible with SCSV2.84 and higher.

C.2 Mode B Operation

When the panel is programmed as "Mode B", and newest software is running, "Mode B" is also available. As described below, there are differences in behavior when CBE lockout is programmed from when CBE lockout is not programmed.

C.2.1 Mode B without CBE Lockout: Independent Switch-Group Operation

■ Definition

Classic SCS operation has dictated that manual mode (initiated by an event or by toggling any one switch) would affect all switch groups.

Independent switch-group operation describes a new mode of operation where a single switch group can enter manual mode without affecting other switch groups. This is used in applications where smoke control zones are in physically separated parts of the building, but on the same system.

■ Programming

To get this form of operation:

- The NFS2-3030/NCA-2 must be programmed for Mode B.
- No points 65-96 should be programmed; i.e. no CBE lockout.
- Software versions must match those described above.

C.2.2 Mode B with CBE Lockout

■ Definition

In Mode B operation, a manually controlled switch that is returned to the AUTO position will return to the lockout state (the state determined by the first automated event).

When no automated event occurs, Mode B operation is like that described in Appendix C.2.1.

■ Programming

Mode B with CBE lockout requires point programming in position(s) 65-96.

When one of these points is programmed to monitor a panel zone containing smoke control points or a single smoke control device, activation of the zone or device will cause subsequent automatic events to be locked out. Smoke control can then only be overridden manually.

C.3 Multiple Smoke Control Station

■ Definition

Multiple smoke control station operation is a feature that allows the configuration of a system with primary and secondary (redundant) smoke control stations. Primary and secondary smoke control stations are capable of identical control and reporting.

Only one smoke control station can be active at any moment, as selected by manual input; visual indication of the active station is required.

Control is managed by a switch input and is hierarchical. The hierarchy of active control is established during system installation and programming.

■ Programming

Multiple smoke control station operation requires:

- NCA-2 (V21 or higher).
- SCS-8L (V4.0 or higher).

See *NCA-2 Manual* for instructions on programming the following example.

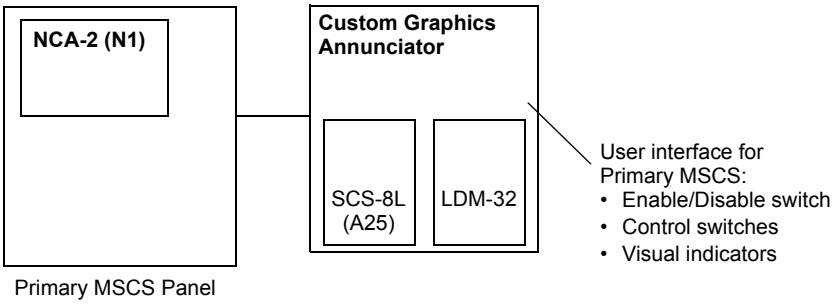

Programming	Visual Indicators	Notes
ZL498 = OR(SCSDIS(A25),N2ZL498)	Primary SCS Disabled	ZL498 will be active when the primary's enable/disable switch is disabled and the secondary NCA-2 SCS is enabled/disabled.
ZL499 = OR(AUTO(A25))	--	Required for Multiple Smoke Control Systems applications; monitors the Auto status of the SCS-8L (designated as A25 in this example). Logic zone address must be lower than that of the MSCS Control Zone.
ZL500 = AND(NOT(SCSDIS(A25)),NOT(N2ZL500))	Primary SCS Active	ZL500 identifies the MSCS Control Zone of the primary NCA-2. This logic zone will be active when the primary's enable/disable switch (SCSDIS) is enabled and the secondary NCA-2 is disabled.
ZL501 = AND(ZL499,N2ZL499)	--	Required to track when the SCS-8L is in Auto. SCS-8L must use the next consecutive logic zone address after the MSCS Control Zone of the primary NCA-2.
N2ZL500	Secondary SCS Active	N2ZL500 identifies the MSCS Control Zone of the secondary NCA-2.

Figure C.1 Programming Example 1: Primary Panel, Normally in Control, Enabled

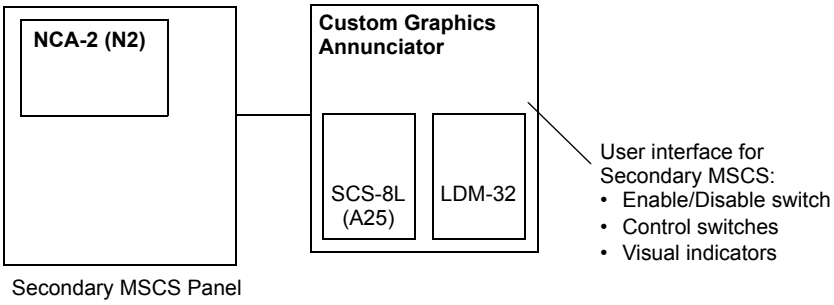

Programming	Visual Indicators	Notes
ZL498 = OR(SCSDIS(A25))	Secondary SCS Disabled	ZL498 will be active when the secondary's enable/disable switch is disabled.
ZL499 = OR(AUTO(A25))	--	Required for Multiple Smoke Control Systems applications; monitors the Auto status of the SCS-8L (designated as A25 in this example). Address must be lower than that of the MSCS Control Zone.
ZL500 = NOT(SCSDIS(A25))	Secondary SCS Active	ZL500 identifies the MSCS Control Zone of the secondary NCA-2. This logic zone will be active when the secondary's enable/disable switch is enabled.
ZL501 = AND(ZL499, N1ZL499)	--	Required to track if the SCS-8L is in Auto; must use the next logic zone address after the MSCS Control Zone of the secondary NCA-2.
N1ZL500	Primary SCS Active	N1ZL500 identifies the MSCS Control Zone of the primary NCA-2.

Figure C.2 Programming Example 2: Secondary Panel, Highest Priority, Normally Disabled

■ History/Printer

Figure C.3 shows the printer output for enable/disable switch state changes.

```
CLEARED ACTIVE                          MSCS CONTROL ZONE
                                        10:10:28A WED NOV 13, 2013 ZL0500

ACTIVE                                  MSCS CONTROL ZONE
                                        10:10:24A WED NOV 13, 2013 ZL0500
```

Figure C.3 Event History Example: Activating the Enable Switch

C.4 Read Status

The NFS2-3030 or NCA-2 can read status of the SCS-8L which is connected to it. It is accessed through the keypad of the local panel. Figure C.4 shows the display and descriptions of the fields when a switch group is in time out trouble.

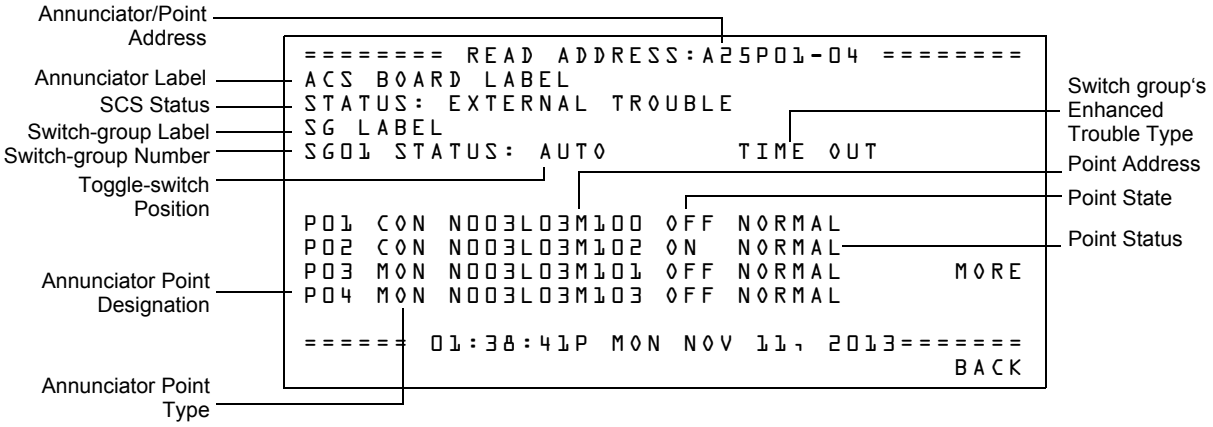

Figure C.4 Read Status Display Example 1: Switch Group in Time Out Trouble

- **Annunciator/Point address.** Address range to be displayed.
- **Annunciator label.** User-programmed 40-character text label for the SCS.
- **SCS status.** Status of the smoke control system: NORMAL; COMM LOSS; DIP SW DEFAULT; MODE CONFIG; EXPANDER CONFIG; EXTERNAL TROUBLE.
  See "FSCS Mode Switch Group Types" on page 34 or "**HVAC Trouble Conditions**" on page 68.
- **Switch-group label.** User-programmed 40-character text label for the switch group.
- **Switch-group number.** Displays the switch group number.
- **Toggle-switch position.** Configuration of the selected switch group: AUTO, ON/OPEN, OFF/CLOSED.
- **Annunciator point designation.** List of up to four points associated with the selected switch group.
- **Annunciator point type.** Identifies whether the designated point is a control or monitor point.
- **Switch-group enhanced trouble type.** Status of the selected switch group: NORMAL, DEVICE MISMATCH, DEVICE TROUBLE, DIP SW MISMATCH, TIME OUT. See "SCS Dipswitch Settings for FSCS Mode" on page 50 or "**FSCS Toggle Switch Group Trouble**" on page 58.
- **Point state.** ON, OFF.
- **Point status.** Status of points P01-P04 of the selected switch group.
  - CON modules status: NORMAL, NO ANSWER; INVALID RESPONSE; MISMAT HDW TYPE; DISABLED.
  - MON modules status: NORMAL, NO ANSWER; INVALID RESPONSE; MISMAT HDW TYPE; DISABLED; OPEN CIRCUIT.

Figure C.5 shows the display and descriptions of the fields when the primary command node is in normal condition.

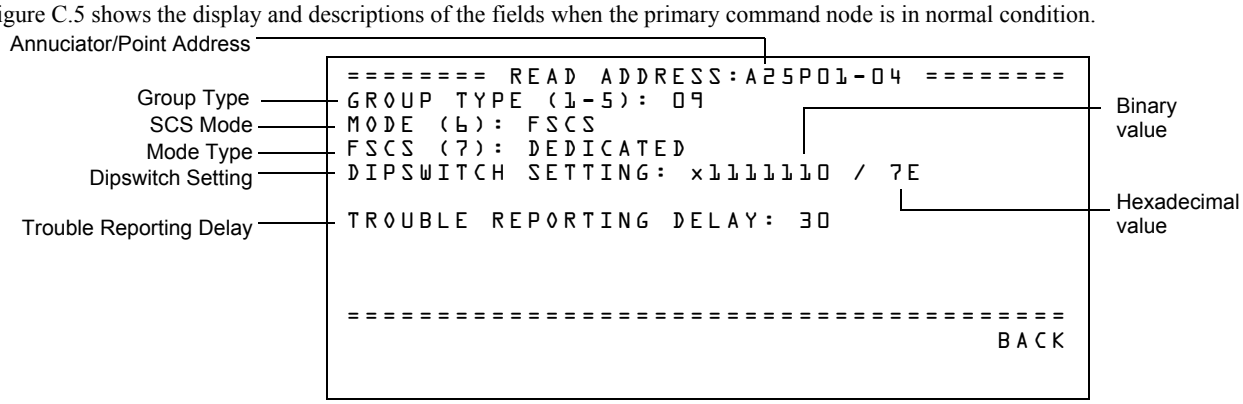

Figure C.5 Read Status Example 2: Primary Command Node Normal

- **Group type.** For FSCS Settings, see Table 3.5. For HVAC settings, see Table 3.10
- **SCS mode.** FSCS, HVAC.
- **Mode type.** Title of field displays the current SCS mode.

– FSCS mode: DEDICATED, NON-DEDICATED.

– HVAC mode: ENABLE, DISABLE.

- **Dipswitch setting.** Displays options configured as in Table 3.3. **Binary value** sequence: switch 7 to switch 1. **Hexadecimal value** after slash.
- **Trouble reporting delay.** Displays the number of seconds programmed for the panel's adjustable trouble delay timer.

C.4.1 History/Printer

Figure C.6 shows a sample LCD display for a trouble event:

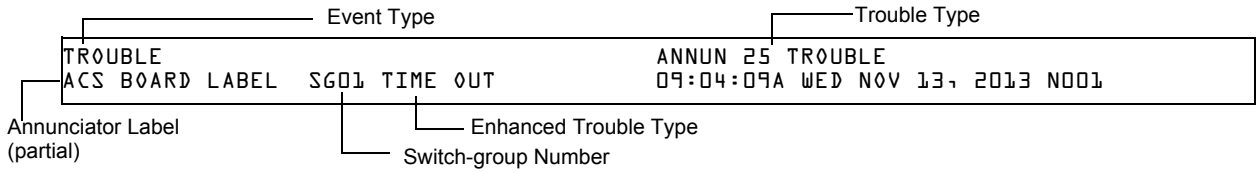

Figure C.6 Event History Example: Trouble Condition

- **Event type.** This example shows the options for a trouble event.
- **Annunciator label (partial).** First 16 characters of the SCS-8's user-programmed text label.
- **Switch-group number.** Switch-group number is displayed for external troubles.
- **Trouble type.** ANNUN xx TROUBLE; ANNUN xx NO ANSWER.
- **Enhanced trouble type.** These provide more detail on the trouble (DIP SW DEFAULT; MODE CONFIG; EXPANDER CONFIG) or external trouble (SGxx DEVICE MISMATCH; SGxx DEVICE TROUBLE; SGxx DIP SW MISMATCH; SGxx TIME OUT).

C.5 Pairing

■ Definition

Pairing (SCS Mode A) allows SCS modules to be "grouped" so that more than one FSCS module will act as a single FSCS module. All paired FSCS modules will enter manual mode when any toggle switch is used to enter manual mode. (See NFS2-3030/NCA-2 documentation.)

■ Programming

Programming Requirements:

- The NFS2-3030/NCA-2 must be programmed for SCS Mode A.
- Paired module addresses must be configured in the NFS2-3030/NCA-2.
- Paired modules must be configured for FSCS mode.
- For CBE lockout, program points 65-96 on the first FSCS module only.
- Software versions must match those described above.

C.6 Custom Graphic Annunciator with White Light Indication

In applications where the local AHJ requires a white light, logic equation operators (NORM, AUTO) can be used with SCS-8L and LDM-32(s) to produce the required state.

See NFS2-3030/NCA-2 documentation for logic equation programming.

■ Examples

1. SCS shall indicate NORMAL when all SCS switch groups are in the AUTO position:

   ZL=OR(AUTO(A25))

2. SCS shall provide a NORMAL indication for an individual switch group:

   ZL=OR(AUTO(A25G1))

3. SCS NORMAL state indication includes AC monitoring for control point:

   ZL=AND(N3L1M1,NORM(A25G1))

   (where N3L1M1 represents a monitor module used to monitor the equipment control power).

Index

A
adjustable trouble delay timer **30**, **58**
Automatic Control
    Dedicated System Operation **59**
    Non-dedicated System Operation **59**

C
Canadian **11**
Canadian applications **96**
CBE lockout **69**
Chart of Abbreviations **29**
CM, definition **29**
COMM **57**
COMM LOSS **57**, **68**
CON **34**
Configuration **49**
custom graphic annunciator **32**, **43**

D
Dedicated System Operation **58**
definitions **10**, **34**
Design Considerations **32**, **33**
DEVICE MISMATCH **58**, **68**
DEVICE TROUBLE **58**, **68**
DIP SW DEFAULT **58**, **68**
DIP SW MISMATCH **58**, **69**
dipswitch **96**
Dipswitch setting **36**

E
EIA-485 **47**
EIA-485 Addressing **36**
EIA-485 shield **40**
Electrical Ratings **42**, **49**
Enhanced Trouble Reporting **30**, **194**
EXPANDER CONFIG **58**, **68**

F
Fan and Damper Capabilities **33**
Fan and Damper Operation **33**
Firefighter's Smoke Control Station Mode - See FSCS Mode
FSCS **49**, **56**
FSCS Mode **49**
FSCS Mode Switch Group Types **34**
FSCS Module Trouble **57**
FSCS Toggle Switch Group Trouble **58**
FSCS Trouble Conditions **57**

G
glossary **10**

H
Hardware Features **29**
Heating, Ventilating & Air Conditioning Mode - See HVAC Mode
HVAC Mode **60**
HVAC Mode, No CBE Lockout **73**

I
Independent Switch-group Operation **30**
Installation **38**
Intallation
    SCS-8L/SCE-8L **43**

L
LED/Lamp Wiring for SCS-8L/SCE-8L **45**, **46**
LEDs or Lamps **44**
Legacy Systems **74**
Logic Equation Operators **30**

M
Manual Control
    Dedicated System Operation **59**
    Non-dedicated System Operation **59**
MM, definition **29**
Mode A **30**, **59**, **60**, **191**
Mode B **30**, **191**, **195**
MODE CONFIG **58**, **68**
Mounting **37**
Multiple Smoke Control Station **30**

N
NFPA standards **7**
NFS2-320/NFS2-640 PRogramming **73**
Non-dedicated System Operation **59**

O
OFF/CLOSED Control **34**
OFF/CLOSED Verification **34**
ON/OPEN Control **34**
ON/OPEN Verification **34**

P
Pairing **30**, **69**
Power **48**
Programming and Testing **49**

R
redundant smoke control station **191**
related documents **8**
Relay Expander Module **46**
Restrictions **96**

S
SCS V3.0 Software Features **29**
SCS2.84 **29**, **32**, **49**, **60**, **97**
SCS-8 **30**
    wiring multiples **41**
SCS-8 product diagram **30**
SCS-8L **31**
    wiring multiples **48**
SCS-8L product diagram **31**
SCS-8L/SCE-8L Current Draw **49**
standards **7**
Steps before programming **69**
supplemental documentation **8**
Switch Group **34**
Switch Group Type **34**
Switch Group Type Configuration **34**
Switch Wiring SCS-8L/SCE-8L **44**

T
Terminal Blocks **48**
TIME OUT **58**
Toggle Switch **56**
trouble delay timer **30**, **58**

U
UL standards **7**
ULC standards **7**
UUKL **43**

V
Veri•Fire Programming **73**
Veri•Fire Tools Programming **71**

W
Worksheet **190**

X
XLS3000 **190**

Manufacturer Warranties and Limitation of Liability

Manufacturer Warranties. Subject to the limitations set forth herein, Manufacturer warrants that the Products manufactured by it in its Northford, Connecticut facility and sold by it to its authorized Distributors shall be free, under normal use and service, from defects in material and workmanship for a period of thirty six months (36) months from the date of manufacture (effective Jan. 1, 2009). The Products manufactured and sold by Manufacturer are date stamped at the time of production. Manufacturer does not warrant Products that are not manufactured by it in its Northford, Connecticut facility but assigns to its Distributor, to the extent possible, any warranty offered by the manufacturer of such product. This warranty shall be void if a Product is altered, serviced or repaired by anyone other than Manufacturer or its authorized Distributors. This warranty shall also be void if there is a failure to maintain the Products and the systems in which they operate in proper working conditions.

MANUFACTURER MAKES NO FURTHER WARRANTIES, AND DISCLAIMS ANY AND ALL OTHER WARRANTIES, EITHER EXPRESSED OR IMPLIED, WITH RESPECT TO THE PRODUCTS, TRADEMARKS, PROGRAMS AND SERVICES RENDERED BY MANUFACTURER INCLUDING WITHOUT LIMITATION, INFRINGEMENT, TITLE, MERCHANTABILITY, OR FITNESS FOR ANY PARTICULAR PURPOSE. MANUFACTURER SHALL NOT BE LIABLE FOR ANY PERSONAL INJURY OR DEATH WHICH MAY ARISE IN THE COURSE OF, OR AS A RESULT OF, PERSONAL, COMMERCIAL OR INDUSTRIAL USES OF ITS PRODUCTS.

This document constitutes the only warranty made by Manufacturer with respect to its products and replaces all previous warranties and is the only warranty made by Manufacturer. No increase or alteration, written or verbal, of the obligation of this warranty is authorized. Manufacturer does not represent that its products will prevent any loss by fire or otherwise.

Warranty Claims. Manufacturer shall replace or repair, at Manufacturer's discretion, each part returned by its authorized Distributor and acknowledged by Manufacturer to be defective, provided that such part shall have been returned to Manufacturer with all charges prepaid and the authorized Distributor has completed Manufacturer's Return Material Authorization form. The replacement part shall come from Manufacturer's stock and may be new or refurbished. THE FOREGOING IS DISTRIBUTOR'S SOLE AND EXCLUSIVE REMEDY IN THE EVENT OF A WARRANTY CLAIM.

Warn-HL-08-2009.fm

NOTIFIER
12 Clintonville Road
Northford, CT 06472-1610 USA
203-484-7161
www.notifier.com

NOTIFIER®
by Honeywell