I56-6789-002

3825 Ohio Avenue, Illinois 60174
1-800-SENSOR2, FAX: 630-377-6495
www.systemsensor.com

M500RAP Relay Control Module

SPECIFICATIONS

Normal Operating Voltage:	15 to 32 VDC
Maximum Current Draw:	6.5 mA (LED on)
Average Operating Current:	230µA direct poll; 255µA group poll
EOL Resistance:	Not used
Temperature Range:	32˚F to 120˚F (0˚C to 49˚C)
Humidity:	10% to 93% Non-condensing
Dimensions:	4.675" H x 4.275" W x 1.4" D (119 mm H x 108 mm W x 36 mm D) (Mounts to a 4" square by 2⅛" deep box.)
Accessories:	SMB500 Series Electrical Box

NOTE: The control module is manufactured using two configurations. Both variants offer the same functionality. Reference the section of the manual that reflects the terminal alignment on the module you are using.

RELAY CONTACT RATINGS

CURRENT RATING	MAXIMUM VOLTAGE	LOAD DESCRIPTION	APPLICATION
2 A	25 VAC	PF = 0.35	Non-coded
3 A	30 VDC	Resistive	Non-coded
2 A	30 VDC	Resistive	Coded
0.46 A	30 VDC	(L/R = 20ms)	Non-coded
0.7 A	70.7 VAC	PF = 0.35	Non-coded
0.9 A	125 VDC	Resistive	Non-coded
0.5 A	125 VAC	PF = 0.75	Non-coded
0.3 A	125 VAC	PF = 0.35	Non-coded

BEFORE INSTALLING

This information is included as a quick reference installation guide. Refer to the control panel installation manual for detailed system information. If the modules will be installed in an existing operational system, inform the operator and local authority that the system will be temporarily out of service. Disconnect power to the control panel before installing the modules.

NOTICE: This manual should be left with the owner/user of this equipment.

GENERAL DESCRIPTION

The M500RAP Relay Control Module is intended for use in intelligent, two-wire systems where the individual address of each module is selected using the built-in rotary switches. It allows a compatible control panel to switch discrete contacts by code command. The relay contains two isolated sets of Form-C contacts, which operate as a DPDT switch and are rated in accordance with the table in the manual. Circuit connections to the relay contacts are not supervised by the module. The module also has a panel controlled LED indicator.

COMPATIBILITY REQUIREMENTS

To ensure proper operation, this module shall be connected to a compatible system control panel only.

FIGURE 1. CONTROLS, INDICATORS, AND TERMINAL DEFINITIONS

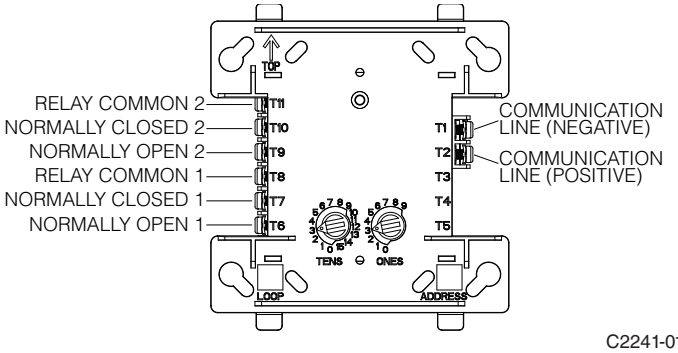

C2241-01

Note: For legacy terminal designations, see Figure 4.

MOUNTING

The M500RAP mounts directly to 4-inch square electrical boxes. (See Figure 2). The box must have a minimum depth of 2⅛ inches (54 mm). Surface mounted electrical boxes (SMB500-WH) are available from System Sensor. The module can also mount to the DNR(W) duct housing.

FIGURE 2. MODULE MOUNTING

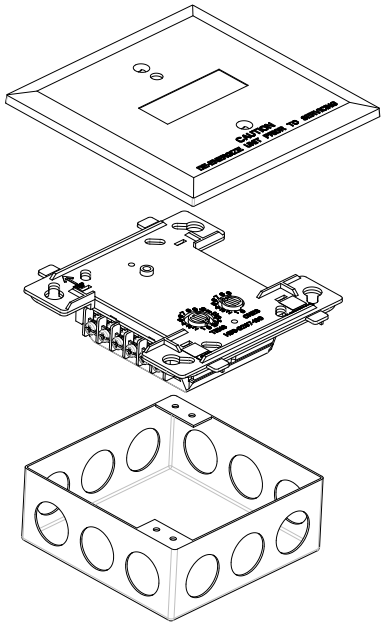

C2250-00

WIRING

NOTE: All wiring must conform to applicable local codes, ordinances, and regulations.

1. Install module wiring in accordance with the job drawings and appropriate wiring diagrams.
2. Set the address on the module per job drawings.
3. Secure module to electrical box (supplied by installer). See Figure 2.

Wire should be stripped to the appropriate length (recommended strip length is 1/4" to 3/8") (6 mm to 10 mm). Exposed conductor should be secured under the clamping plate and should not protrude beyond the terminal block area.

⚠CAUTION

Caution: Do not loop wire under terminals. Break wire run to provide supervision of connections.

NOTE: Dispose electronic waste following national and/or local regulations.

⚠WARNING

All relay switch contacts are shipped in the standby state (open) state, but may have transferred to the activated (closed) state during shipping. To ensure that the switch contacts are in their correct state, modules must be made to communicate with the panel before connecting circuits controlled by the module.

FIGURE 3. RELAY MODULE WIRING DIAGRAM

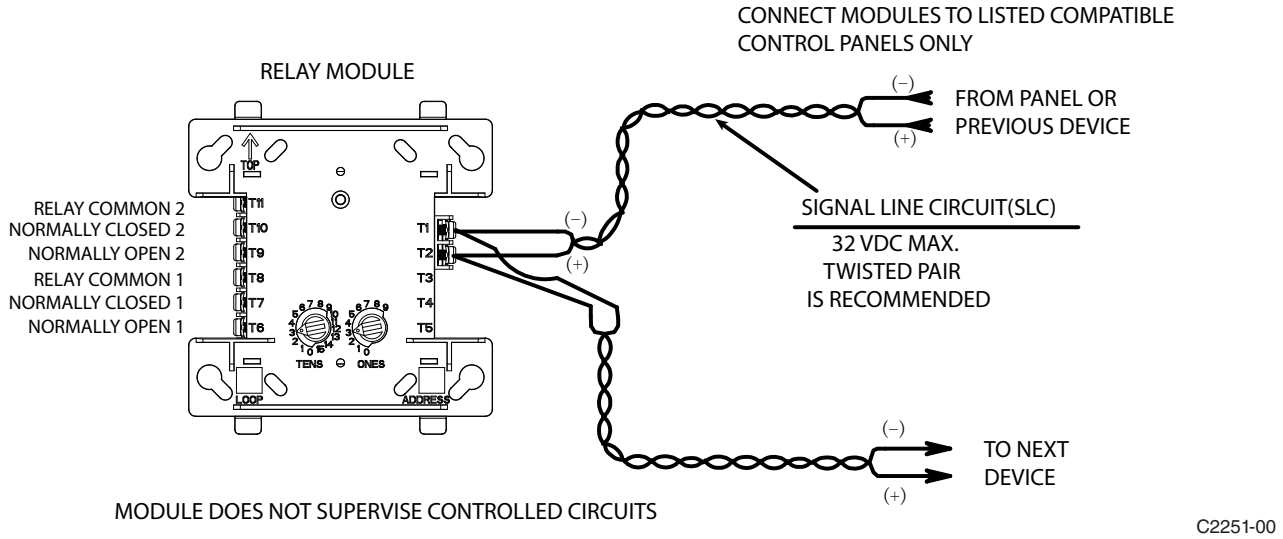

FIGURE 4. RETROFIT TERMINAL DESIGNATIONS FOR LEGACY M500RAP

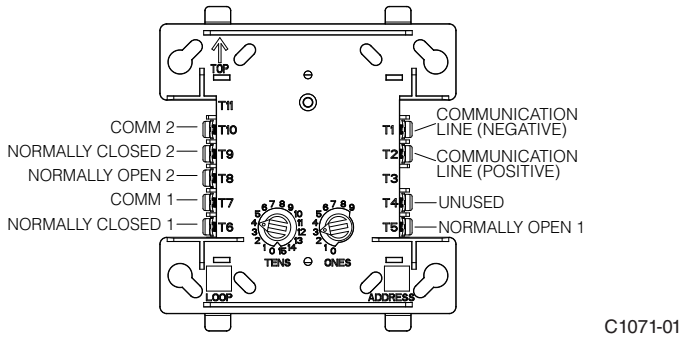

NOTE: Refer to pages 3 and 4 of this instruction manual for complete information regarding the legacy M500RAP configuration.

THREE-YEAR LIMITED WARRANTY

System Sensor warrants its enclosed product to be free from defects in materials and workmanship under normal use and service for a period of three years from date of manufacture. System Sensor makes no other express warranty for the enclosed product. No agent, representative, dealer, or employee of the Company has the authority to increase or alter the obligations or limitations of this Warranty. The Company's obligation of this Warranty shall be limited to the replacement of any part of the product which is found to be defective in materials or workmanship under normal use and service during the three year period commencing with the date of manufacture. After phoning System Sensor's toll free number 800-SENSOR2 (736-7672) for a Return Authorization number, send defective units postage prepaid to: Honeywell, 12220 Rojas Drive, Suite 700, El Paso TX 79936 USA. Please include a note describing the malfunction and suspected cause of failure. The Company shall not be obligated to replace units which are found to be defective because of damage, unreasonable use, modifications, or alterations occurring after the date of manufacture. In no case shall the Company be liable for any consequential or incidental damages for breach of this or any other Warranty, expressed or implied whatsoever, even if the loss or damage is caused by the Company's negligence or fault. Some states do not allow the exclusion or limitation of incidental or consequential damages, so the above limitation or exclusion may not apply to you. This Warranty gives you specific legal rights, and you may also have other rights which vary from state to state.

System Sensor® is a registered trademark of Honeywell International, Inc.

©2025 System Sensor. 06/04/2025

M500RAP Relay Control Module
(Legacy M500RAP)

3825 Ohio Avenue, St. Charles, Illinois 60174
1-800-SENSOR2, FAX: 630-377-6495
www.systemsensor.com

SPECIFICATIONS

Normal Operating Voltage:	15 to 32 VDC
Maximum Current Draw:	6.5 mA (LED on)
Average Operating Current:	300 µA, 1 communication every 5 seconds
EOL Resistance:	Not used
Temperature Range:	32˚F to 120˚F (0˚C to 49˚C)
Humidity:	10% to 93% Non-condensing
Dimensions:	4.675" H x 4.275" W x 1.4" D (119 mm H x 108 mm W x 36 mm D) (Mounts to a 4" square by 2⅛" deep box.)
Accessories:	SMB500 Electrical Box; CB500 Barrier

NOTE: The control module is manufactured using two configurations. Both variants offer the same functionality. Reference the section of the manual that reflects the terminal alignment on the module you are using.

RELAY CONTACT RATINGS

CURRENT RATING	MAXIMUM VOLTAGE	LOAD DESCRIPTION	APPLICATION
2 A	25 VAC	PF = 0.35	Non-coded
3 A	30 VDC	Resistive	Non-coded
2 A	30 VDC	Resistive	Coded
0.46 A	30 VDC	(L/R = 20ms)	Non-coded
0.7 A	70.7 VAC	PF = 0.35	Non-coded
0.9 A	125 VDC	Resistive	Non-coded
0.5 A	125 VAC	PF = 0.75	Non-coded
0.3 A	125 VAC	PF = 0.35	Non-coded

BEFORE INSTALLING

This information is included as a quick reference installation guide. Refer to the control panel installation manual for detailed system information. If the modules will be installed in an existing operational system, inform the operator and local authority that the system will be temporarily out of service. Disconnect power to the control panel before installing the modules.

NOTICE: This manual should be left with the owner/user of this equipment.

GENERAL DESCRIPTION

The M500RAP Relay Control Module is intended for use in intelligent, two-wire systems, where the individual address of each module is selected using the built-in rotary decade switches. It allows a compatible control panel to switch discrete contacts by code command. The relay contains two isolated sets of Form-C contacts, which operate as a DPDT switch and are rated in accordance with the table in the manual. Circuit connections to the relay contacts are not supervised by the module. The module also has a panel controlled LED indicator.

COMPATIBILITY REQUIREMENTS

To ensure proper operation, these modules shall be connected to listed compatible system control panels only.

FIGURE 1. CONTROLS AND INDICATORS:

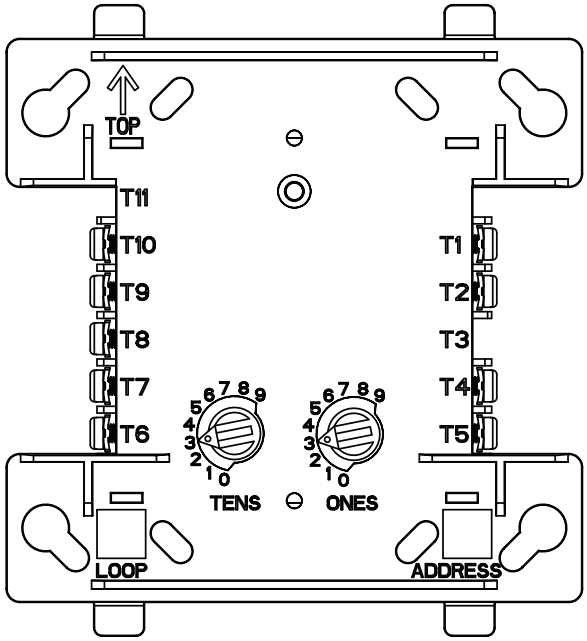

C0925-01

MOUNTING

The M500RAP mounts directly to 4˝ square electrical boxes (see Figure 2A). The box must have a minimum depth of 2⅛˝. Surface mounted electrical boxes (SMB500) are available from System Sensor.

FIGURE 2A. MODULE MOUNTING WITH BARRIER:

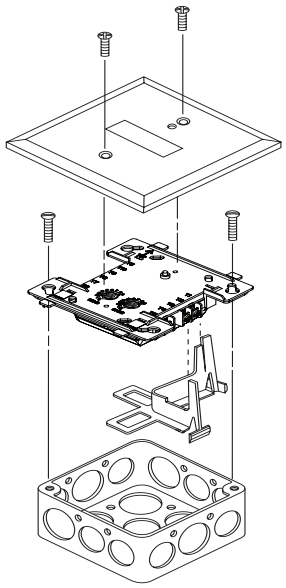

FIGURE 2B.

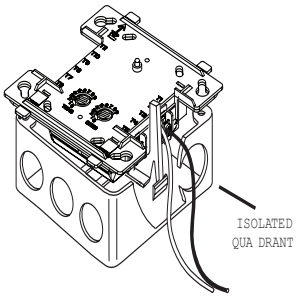

C0926-01
C0927-01

WIRING

NOTE: All wiring must conform to applicable local codes, ordinances, and regulations. When using control modules in nonpower limited applications, the System Sensor CB500 Module Barrier must be used to meet UL requirements for the separation of power-limited and nonpower-limited terminals and wiring. The barrier must be inserted into a 4”× 4”× 2⅛” junction box, and the control module must be placed into the barrier and attached to the junction box (Figure 2A). The power-limited wiring must be placed into the isolated quadrant of the module barrier (Figure 2B).

1. Install module wiring in accordance with the job drawings and appropriate wiring diagrams.
2. Set the address on the module per job drawings.
3. Secure module to electrical box (supplied by installer),as shown in Figure 2A.

⚠WARNING

All relay switch contacts are shipped in the standby state (open) state, but may have transferred to the activated (closed) state during shipping. To ensure that the switch contacts are in their correct state, modules must be made to communicate with the panel before connecting circuits controlled by the module.

FIGURE 3. RELAY MODULE WIRING DIAGRAM

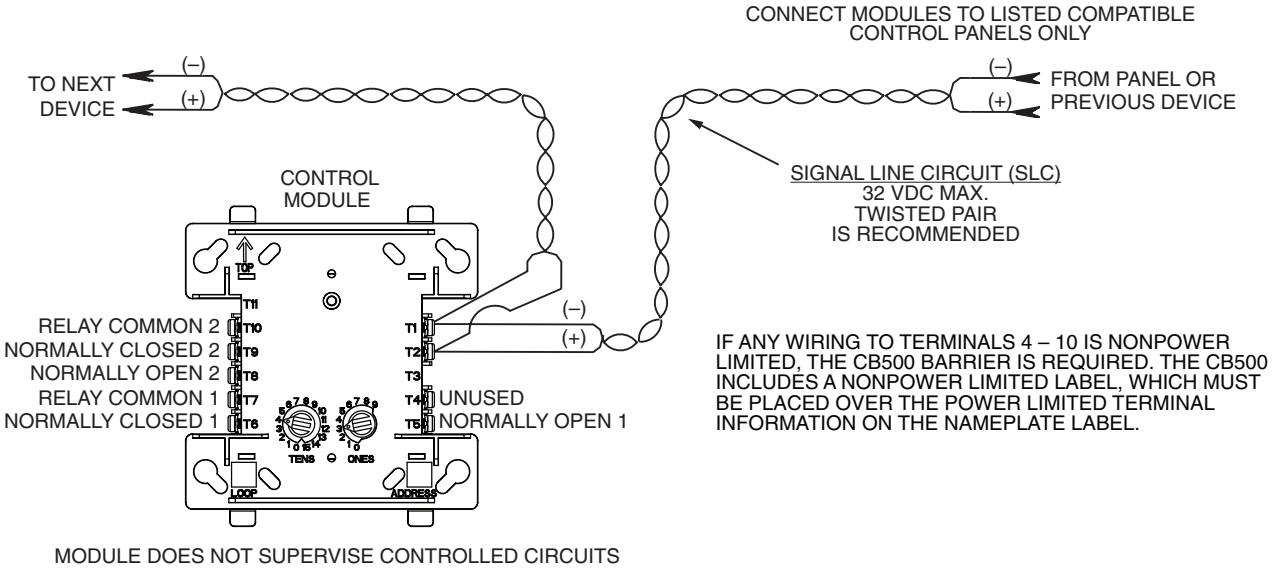

*NOTE: ANY FAULT IN THE POWER SUPPLY IS LIMITED TO THAT ZONE AND DOES NOT RESULT IN A FAULT IN A SEPARATE ZONE.

C0924-03

THREE-YEAR LIMITED WARRANTY

System Sensor warrants its enclosed product to be free from defects in materials and workmanship under normal use and service for a period of three years from date of manufacture. System Sensor makes no other express warranty for the enclosed product. No agent, representative, dealer, or employee of the Company has the authority to increase or alter the obligations or limitations of this Warranty. The Company’s obligation of this Warranty shall be limited to the replacement of any part of the product which is found to be defective in materials or workmanship under normal use and service during the three year period commencing with the date of manufacture. After phoning System Sensor’s toll free number 800-SENSOR2 (736-7672) for a Return Authorization number, send defective units postage prepaid to: Honeywell, 12220 Rojas Drive, Suite 700, El Paso TX 79936 USA. Please include a note describing the malfunction and suspected cause of failure. The Company shall not be obligated to replace units which are found to be defective because of damage, unreasonable use, modifications, or alterations occurring after the date of manufacture. In no case shall the Company be liable for any consequential or incidental damages for breach of this or any other Warranty, expressed or implied whatsoever, even if the loss or damage is caused by the Company’s negligence or fault. Some states do not allow the exclusion or limitation of incidental or consequential damages, so the above limitation or exclusion may not apply to you. This Warranty gives you specific legal rights, and you may also have other rights which vary from state to state.

©2025 System Sensor. 06/04/2025