INSTALLATION AND MAINTENANCE INSTRUCTIONS

SYSTEM SENSOR®
3825 Ohio Avenue, St. Charles, Illinois 60174
1-800-SENSOR2, FAX: 630-377-6495
www.systemsensor.com

WFDN Vane-type Waterflow Detectors

SPECIFICATIONS

Contact Ratings:	10 A @ 125/250 VAC ∿; 2.5 A @ 24 VDC ⎓
Triggering Threshold Bandwidth (Flow Rate):	4 to 10 gpm
Static Pressure Rating:	See models listed below
Dimensions, Installed:	2.6 in H x 3.5 in W x 6.7 in D
Operating Temperature Range:	32°F to 150°F (0°C to 66°C)
Compatible Pipe:	Steel water pipe, schedule 7 through 40 (See chart below)
Shipping Weight:	3 to 6 lbs (according to size)
Enclosure Rating:	NEMA Type 4, as tested by Underwriters Laboratories, Inc.
U. S. Patent Numbers:	5,213,205

IMPORTANT

Please Read Carefully And Save

This instruction manual contains important information about the installation and operation of waterflow detectors. Purchasers who install waterflow detectors for use by others must leave this manual or a copy of it with the user.

Read all instructions carefully before beginning. Follow only those instructions that apply to the model you are installing.

⚠CAUTION

The model WFDN is a vane-type waterflow detector for use in wet-pipe fire sprinkler systems only. Vane-type waterflow detectors shall not be used as the sole initiating device in both deluge and preaction systems; waterflow detectors used in these types of systems may result in an unintended discharge caused by a surge, trapped air or a short retard time.

⚠WARNING

Installation must be performed by qualified personnel and in accordance with all national and local codes and ordinances.

Shock hazard: Disconnect power source before servicing. Serious injury or death could result.

Risk of explosion: Not for use in hazardous locations. Serious injury or death could result.

PRINCIPLES OF OPERATION

Vane-type waterflow detectors mount to water-filled pipes in fire sprinkler systems. Waterflow in the pipe deflects a vane, which produces a switched output, usually after a specified delay. All WFDNs have a pneumatically controlled mechanical delay mechanism. Delays do NOT accumulate; they reset if the flow of water stops or drops below minimum triggering flow rate before the entire delay has elapsed.

All switches actuate when the waterflow rate is 10 gallons per minute or greater, but will not actuate if the flow rate is less than 4 gallons per minute. This System Sensor installation manual covers the following waterflow detectors for fire sprinkler/fire alarm applications.

Model	Pipe Size (inches)	Pipe Schedule	Max. Pressure Rating (psig)
WFD20N	2	7 thru 40	450
WFD25N	2.5	7 thru 40	450
WFD30N	3	7 thru 40	450
WFD40N	4	7 thru 40	450
WFD50N	5	10 thru 40	450
WFD60N	6	10 thru 40	450
WFD80N	8	10 thru 40	450

⚠CAUTION

Do NOT use any of the WFDN models on copper pipe. The clamping forces of the mounting bolts may collapse the pipe sufficiently to prevent the detector from functioning properly.

Do NOT install steel or iron pipe sections in copper piping for mounting a waterflow detector. Incompatibility between the dissimilar metals causes bimetallic corrosion.

INSTALLATION GUIDELINES

Before installing any waterflow alarm device, be thoroughly familiar with:

NFPA 72: *National Fire Alarm Code*
NFPA 13: *Installation of Sprinkler Systems, Sect. 3.17*
NFPA 25: *Inspection, Testing and Maintenance of Sprinkler Systems, Sect. 5.3.3.2*

Other applicable NFPA standards, local codes, and the requirements of the authority having jurisdiction

NOTE: Installation methods other than those listed in this installation manual may prevent the device from reporting the flow of water in the event the associated fire sprinkler system is activated by a fire. System Sensor is not responsible for devices that have been improperly installed, tested, or maintained.

1. Mount the detector where there is adequate clearance for installation and removal and a clear view of it for inspections. See **Figure 1** for mounting dimensions.
2. Locate the detector 6 to 7 feet above the floor to protect from accidental damage.
3. On horizontal runs, position the detector on the top or side of the pipe. Do not mount it upside down because condensation may collect in the housing and impair the operation of the detector. For vertical flow applications, mount the detector on pipe through which water flows upward. Otherwise, the unit may not operate properly.
4. Mount the detector at least 6 inches from a fitting that changes the direction of waterflow and no less than 24 inches from a valve or drain.
5. Be sure the direction-of-flow arrows and directional cover match the direction of flow in the pipe. See **Figure 6**.

MOUNTING INSTRUCTIONS

1. Drain the pipe.
2. Cut a hole in the pipe at the desired location. Center the hole on the pipe, as shown in **Figure 2**, and be sure the hole is perpendicular to the center of the pipe. Before drilling, use a punch or scribe to mark the drill site to prevent the bit from slipping. If the hole is off center, the vane will bind against the inside wall of the pipe. Use a drill or hole saw to cut a hole of the proper diameter. See **Table 1** for hole size.

⚠CAUTION

When drilling the hole with a hole saw, make certain that the center of the cut does not remain in the pipe.

3. Remove burrs and sharp edges from the hole. Clean and remove all scale and foreign matter from the inside of the pipe for a distance equal to the pipe diameter on either side of the hole to ensure free movement of the vane. Clean the outside of the pipe to remove dirt, metal chips, and cutting lubricant.
4. Seat the gasket against the saddle and mount the detector directly to the pipe. Carefully roll the vane opposite the direction of flow and insert it through the hole (see **Figure 3**). Seat the saddle firmly against the pipe so that the locating boss goes into the hole.
5. Install the U-bolt, tightening the nuts alternately to ensure a uniform seal (see **Table 1** for torque values).
6. Remove the cover with the tamper-proof wrench provided. Move the actuator lever back and forth to check for binding. If the vane binds, remove the detector and correct the cause before proceeding.

⚠CAUTION

Be sure the direction-of-flow arrow and directional cover point in the correct direction or else waterflow will go unreported. See **Figure 3** and **Figure 6.**

FIGURE 1. MOUNTING DIMENSIONS

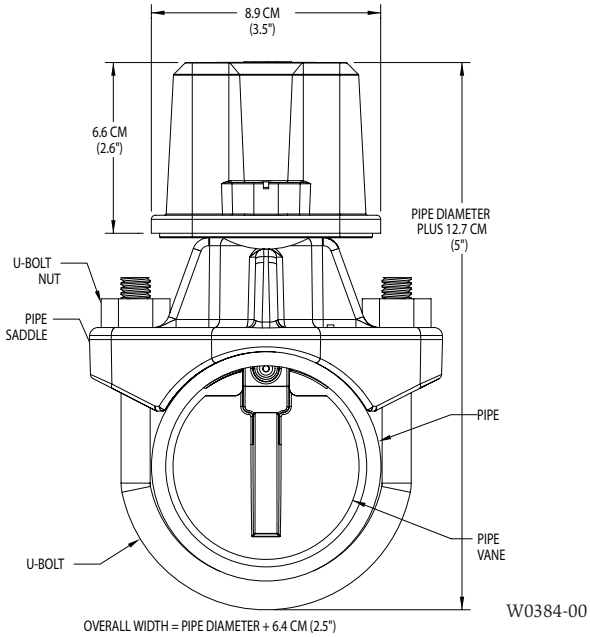

FIGURE 2. MOUNTING HOLE LOCATION

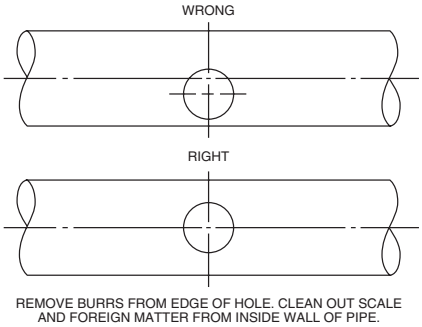

TABLE 1.

WFDN MODEL	HOLE SIZE (IN)	TORQUE
20, 25	1¼	30–35 ft.-lb.
40	2	45–50 ft.-lb.
30, 50, 60, 80	2	60-65 ft.-lb

PRE-OPERATION TESTING

1. Fill the fire sprinkler system and check for leaks around the waterflow detector. If it leaks, first check for the proper torque on the U-bolt nuts. If the leak persists, drain the system and remove the detector (refer to Maintenance). Check for dirt or foreign objects under the gasket, and make sure that the pipe surface is not dented. Reinstall the detector and check again for leaks. Do not proceed until all leaks have been stopped.
2. Connect an ohmmeter or continuity tester across the COM and B-NO switch terminals. The ohmmeter should indicate an open circuit.
3. Deflect the actuator lever and hold it until the pneumatic delay shaft releases the switch buttons. The ohmmeter or continuity tester should show a short circuit after the delay has elapsed. If there is no delay, check the setting of the delay adjustment dial.

FIGURE 3. ASSEMBLY DIAGRAM

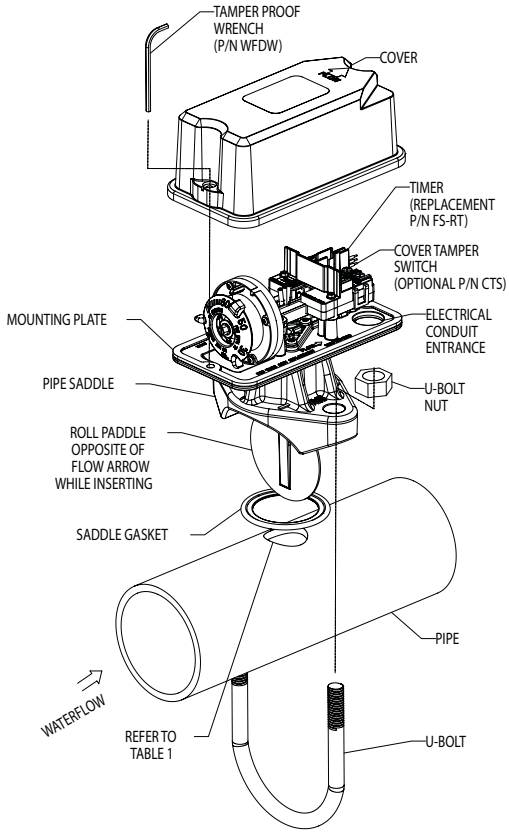

FIELD WIRING

1. All models have two SPDT switches. Switch contacts COM and B-NO are closed when water is flowing and open when it is not. Connect the switches, as shown in **Figure 7**, depending on the application.
2. When connected to a listed fire sprinkler/fire alarm control panel, the initiating circuit must be unable to be silenced.
3. A ground screw is provided with all waterflow detectors. When grounding is required, clamp wire with screw in hole located between conduit entrance holes. See **Figure 4**.
4. Use proper waterproof conduit fittings where required.

⚠WARNING

High Voltage. Electrocution Hazard. Do not handle live AC wiring or work on a device to which AC power is applied. Doing so may result in injury or death.

When utilizing switches at voltages greater than 74VDC ⎓ or 49VAC ∼ means to provide all–pole disconnection must be incorporated in the fixed wiring, such as a circuit breaker.

MECHANICAL DELAY ADJUSTMENT

The pneumatic delay is preset at the factory to 30 seconds. To adjust the setting, turn the adjustment dial clockwise to increase the delay, counterclockwise to decrease it. The delay is adjustable from 0 to 90 seconds max. **See Figure 5.** As a point of reference when setting time delay in dark environments the notch in the dial indicates an approximate 30 second time delay and the larger of the three tabs indicates an approximate 60 second time delay.

NOTE: Set the delay to the minimum required to prevent false alarms from flow surges.

Periodically test time delay as required by Authority Having Jurisdiction or code authority.

OPERATIONAL TESTING

Always notify a central station monitoring waterflow alarms before repairing, maintaining, or testing waterflow alarm devices.

1. Replace the cover and tighten the tamper proof screws with the tamper proof wrench. Store the wrench in a secure place.
2. Open the inspector's test valve and time how long it takes for the detector to indicate a flow condition. The detector should remain activated until the inspector's test valve is closed. Air pockets in the sprinkler system may increase the apparent delay.

MAINTENANCE

To prevent accidental water damage, control valves should be shut tight and the system completely drained before waterflow detectors are removed or replaced.

Inspect detectors in accordance with applicable NFPA codes and standards and/or the Authority Having Jurisdiction for leaks and replace if a leak occurs. Test detectors at least quarterly, as described under Operational Testing, to ensure proper operation. Test more often if required by the authority having jurisdiction.

Under normal conditions, System Sensor waterflow detectors should provide years of trouble-free service. However, if the delay mechanism becomes faulty, a replacement kit is available. To replace the delay mechanism, request Part No. FS-RT. Complete instructions are enclosed with replacement parts. The mechanism can be easily replaced without removing the detector from the pipe or draining the pipe. Do not repair or replace any other waterflow detector components. If any other part of the detector does not perform properly, replace the entire detector. Installation methods other than those listed in this installation manual may prevent the device from reporting the flow of water in the event the associated sprinkler system is activated by a fire. System Sensor is not responsible for devices that have been improperly installed, tested, or maintained.

To remove a detector:

1. Drain the pipe.
2. Turn off electrical power to the detector and disconnect the wiring.
3. Loosen the nuts and remove the U-bolts.
4. Gently lift the saddle far enough to get your fingers under it. Then, roll the vane so it will fit through the hole while continuing to lift the waterflow detector saddle.
5. Lift the detector clear of the pipe.

⚠CAUTION

If a vane breaks in a pipe, find and remove it. If it is not removed, the vane may restrict the flow of water to all or part of the fire sprinkler system.

FIGURE 4. KNOCKOUT PLUG REMOVAL

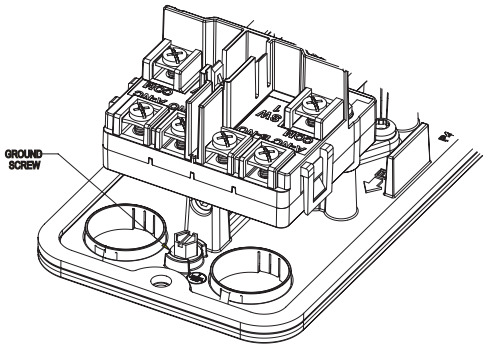

W0383-01

FIGURE 5. DELAY ADJUSTMENT DIAL:

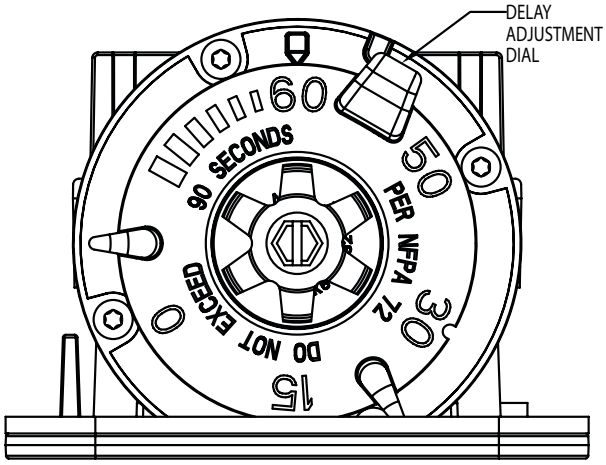

NOTE: RETARD TIME MAY EXCEED 90 SECONDS. ADJUST AND VERIFY THAT TIME DOES NOT EXCEED 90 SECONDS. NUMBER ON DIAL IS APPROXIMATE TIME DELAY IN SECONDS

W0385-00

FIGURE 6. DIRECTIONAL COVER

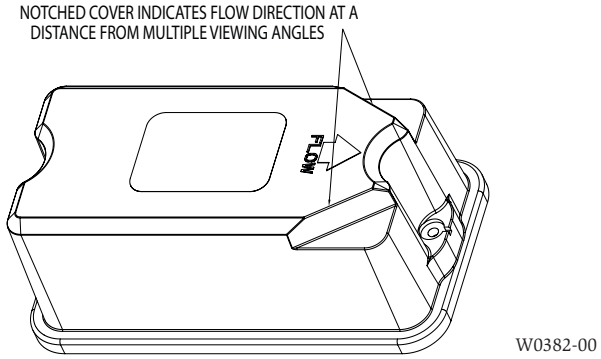

FIGURE 7. WFDN WIRING

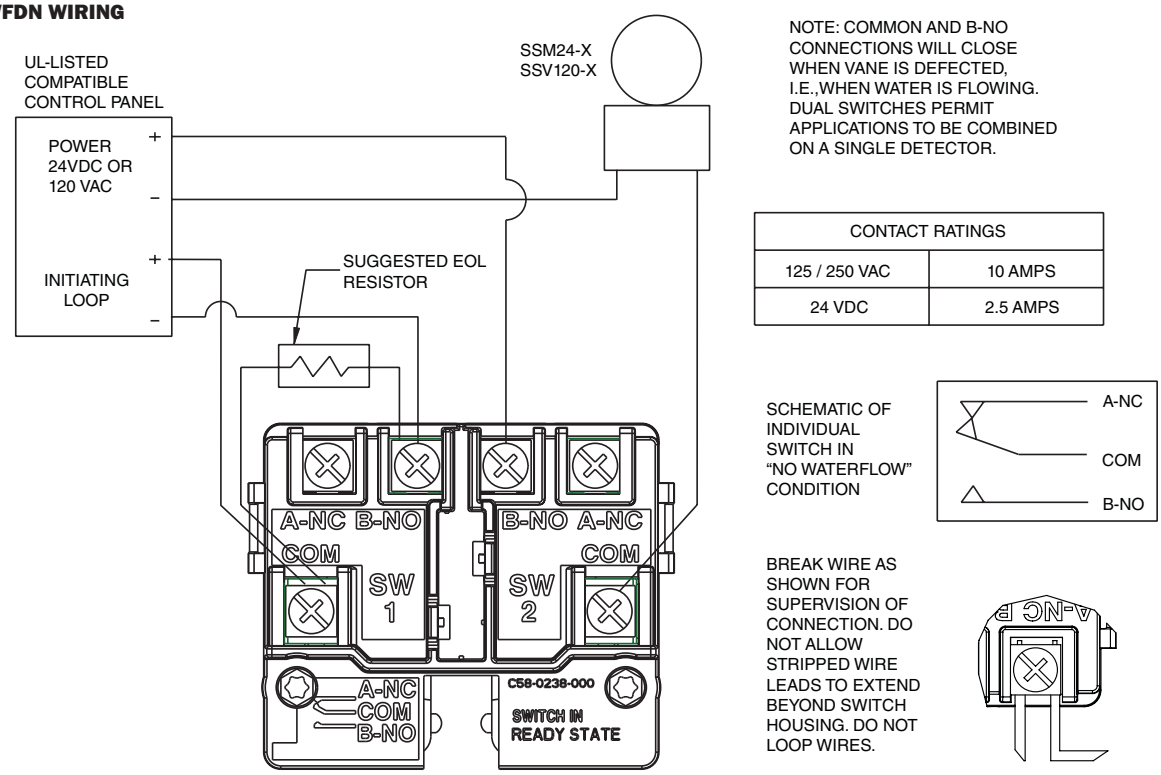

CONTACT RATINGS	
125 / 250 VAC	10 AMPS
24 VDC	2.5 AMPS

W0393-02

Please refer to insert for the Limitations of Fire Alarm Systems

⚠WARNING

THE LIMITATIONS OF WATERFLOW ALARM DEVICES

1. Waterflow detectors may not work or operate properly if sprinkler piping being monitored is plugged with pipe scale, mud, stones or other foreign material. Sprinkler systems should be checked regularly for such blocking material, following the instructions in Chapter 5 of NFPA Standard 13A.
2. Alarms generated by the activation of waterflow detectors may not be received by a central station if telephone or other communication lines to the detector are out of service, disabled, or open.
3. Vane-type waterflow detectors have a normal service life of 10-15 years. Hard water systems, however, may substantially reduce waterflow detector service life.
4. Waterflow detectors are not a substitute for insurance. Building owners should always insure property and lives being protected by sprinkler systems.
5. If valves controlling the water supply to a sprinkler system are closed, vane-type waterflow detectors will not work. All valves controlling a sprinkler water supply should be sealed or locked in the normally open position. The normally open position should be monitored by a sprinkler supervisory switch.

THREE-YEAR LIMITED WARRANTY

System Sensor warrants its enclosed waterflow detector to be free from defects in materials and workmanship under normal use and service for a period of three years from date of manufacture. System Sensor makes no other express warranty for this waterflow detector. No agent, representative, dealer, or employee of the Company has the authority to increase or alter the obligations or limitations of this Warranty. The Company's obligation of this Warranty shall be limited to the repair or replacement of any part of the waterflow detector which is found to be defective in materials or workmanship under normal use and service during the three year period commencing with the date of manufacture. After phoning System Sensor's toll free number 800-SENSOR2 (736-7672) for a Return Authorization number, send defective units postage prepaid to: Honeywell, 12220 Rojas Drive, Suite 700, El Paso TX 79936, USA. Please include a note describing the malfunction and suspected cause of failure. The Company shall not be obligated to repair or replace units which are found to be defective because of damage, unreasonable use, modifications, or alterations occurring after the date of manufacture. In no case shall the Company be liable for any consequential or incidental damages for breach of this or any other Warranty, expressed or implied whatsoever, even if the loss or damage is caused by the Company's negligence or fault. Some states do not allow the exclusion or limitation of incidental or consequential damages, so the above limitation or exclusion may not apply to you. This Warranty gives you specific legal rights, and you may also have other rights which vary from state to state.

System Sensor® is a registered trademark of Honeywell International, Inc.

©2016 System Sensor. 11-09