VESDA-E VEA-040-A00-UL Product Guide

VEA-040-A00-UL
VER-A40-40-STX

April 2021
Doc. No. 36402_A1
Part No. AD36402-000

Intellectual Property and Copyright

This document includes registered and unregistered trademarks. All trademarks displayed are the trademarks of their respective owners. Your use of this document does not constitute or create a licence or any other right to use the name and/or trademark and/or label.

This document is subject to copyright owned by . You agree not to copy, communicate to the public, adapt, distribute, transfer, sell, modify or publish any contents of this document without the express prior written consent of Xtralis.

Disclaimer

The contents of this document is provided on an “as is” basis. No representation or warranty (either express or implied) is made as to the completeness, accuracy or reliability of the contents of this document. The manufacturer reserves the right to change designs or specifications without obligation and without further notice. Except as otherwise provided, all warranties, express or implied, including without limitation any implied warranties of merchantability and fitness for a particular purpose are expressly excluded.

General Warning

This product must only be installed, configured and used strictly in accordance with the General Terms and Conditions, User Manual and product documents available from Xtralis. All proper health and safety precautions must be taken during the installation, commissioning and maintenance of the product. The system should not be connected to a power source until all the components have been installed. Proper safety precautions must be taken during tests and maintenance of the products when these are still connected to the power source. Failure to do so or tampering with the electronics inside the products can result in an electric shock causing injury or death and may cause equipment damage. Xtralis is not responsible and cannot be held accountable for any liability that may arise due to improper use of the equipment and/or failure to take proper precautions. Only persons trained through an Xtralis accredited training course can install, test and maintain the system.

Liability

You agree to install, configure and use the products strictly in accordance with the User Manual and product documents available from Xtralis.

Xtralis is not liable to you or any other person for incidental, indirect, or consequential loss, expense or damages of any kind including without limitation, loss of business, loss of profits or loss of data arising out of your use of the products. Without limiting this general disclaimer the following specific warnings and disclaimers also apply:

Fitness for Purpose

You agree that you have been provided with a reasonable opportunity to appraise the products and have made your own independent assessment of the fitness or suitability of the products for your purpose. You acknowledge that you have not relied on any oral or written information, representation or advice given by or on behalf of Xtralis or its representatives.

Total Liability

To the fullest extent permitted by law that any limitation or exclusion cannot apply, the total liability of Xtralis in relation to the products is limited to:

i. in the case of services, the cost of having the services supplied again; or
ii. in the case of goods, the lowest cost of replacing the goods, acquiring equivalent goods or having the goods repaired.

Indemnification

You agree to fully indemnify and hold Xtralis harmless for any claim, cost, demand or damage (including legal costs on a full indemnity basis) incurred or which may be incurred arising from your use of the products.

Miscellaneous

If any provision outlined above is found to be invalid or unenforceable by a court of law, such invalidity or unenforceability will not affect the remainder which will continue in full force and effect. All rights not expressly granted are reserved.

Scope

The VESDA-E VEA-040-A00-UL Product Guide provides a comprehensive description of the VESDA-E VEA-040-A00-UL detector and its accessories.

This guide introduces the VEA-040-A00-UL features, technical specifications and gives an understanding of its components and their function. You will also find instructions on installing, cabling and powering up the detector.

This guide is for anyone involved with the design, maintenance and purchasing of a VESDA-E system. It is assumed that anyone using this product has the knowledge and appropriate certification from local fire and electrical authorities.

Document Conventions

The following typographic conventions are used in this document:

Convention	Description
Bold	**Used to denote:** emphasis. Used for names of menus, menu options, toolbar buttons
Italics	**Used to denote:** references to other parts of this document or other documents. Used for the result of an action.

The following icons are used in this document:

Convention	Description
	Caution: This icon is used to indicate that there is a danger to equipment. The danger could be loss of data, physical damage, or permanent corruption of configuration details.
	Warning: This icon is used to indicate that there is a danger of electric shock. This may lead to death or permanent injury.
	Warning: This icon is used to indicate that there is a danger of inhaling dangerous substances. This may lead to death or permanent injury.

Contact Us

www.xtralis.com

Codes and Standards Information for Air Sampling Smoke Detection

We strongly recommend that this document is read in conjunction with the appropriate local codes and standards for smoke detection and electrical connections. This document contains generic product information and some sections may not comply with all local codes and standards. In these cases, the local codes and standards must take precedence. The information below was correct at time of printing but may now be out of date, check with your local codes, standards and listings for the current restrictions.

FCC Compliance Statement

This equipment has been tested and found to comply with the limits for a Class B digital device, pursuant to part 15 of the FCC Rules. These limits are designed to provide reasonable protection against harmful interference in a residential installation. This equipment generates, uses and can radiate radio frequency energy and, if not installed and used in accordance with the instruction, may cause harmful interference to radio communications. However, there is no guarantee that interference will not occur in a particular installation. If this equipment does cause harmful interference to radio or television reception, the user is encouraged to try to correct the interference by one or more of the following measures; re-orientate or relocate the receiving antenna, increase the separation between the equipment and receiver, connect the equipment to a power outlet which is on a different power circuit to the receiver or consult the dealer or an experienced radio/television technician for help.

FDA

This Xtralis product incorporates a laser device and is classified as a Class 1 laser product that complies with FDA regulations 21 CFR 1040.10. The laser is housed in a sealed detector chamber and contains no serviceable parts. The laser emits light which can be hazardous to the eye. Under no circumstances should the detector chamber be opened.

The laser chamber is identified by the labels shown below:

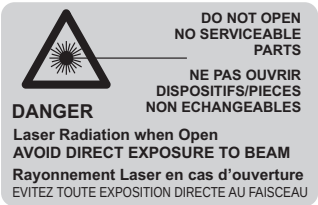

Configuring Detector Thresholds for UL 268 Ed7 standard Compliance

OPEN AREA

Introduction of ANSI standard UL268 7th edition, which now includes a nuisance alarm requirement for which the detector is not permitted to signal an alarm during UL defined nuisance fire conditions.

SPECIAL APPLICATION

Xtralis VESDA-E detectors may be optionally configured for use in special application environments with higher Fire Alarm sensitivity that is, by default not allowed by the ANSI UL 268 Ed7 standard.

Special application mode is suitable for areas where early warning is paramount, in this mode, the detector may not be compliant with the Nuisance requirement of UL 268 Ed7 standard.

Detectors configured for special applications are not suitable for use in areas where cooking appliances can be used.

If it is possible that cooking appliances can be used within the protected space, the detector configuration should be reverted back to open area mode with the respective alarm threshold settings derived from the Aspire design tool and applied to the detector configuration.

Note: Special application configurations are not for general use and the detector may be prone to false alarms if used in unsuitable environments.

While no list is all-inclusive, some examples of unsuitable environments include:

- Areas with airborne particulate or aerosols including:
  - Sawing
  - Drilling
  - Grinding
  - Textile
  - Agricultural processing,
- Areas with engines that are not vented to the outside.
- A list of common aerosol and particulate sources is available in the applicable Annex of NFPA 72.

Environments suitable for special application use may include early warning for:

- Hospitals
- Museums
- Assisted living
- Data centers
- Areas that do not have airborne particulate or aerosols.

Regional Regulatory Requirements and Notices

UL

	Detector Setting		Tube Length (m)		Transport Time (s)		Tube Sensitivity Balance	
	Maximum	**Minimum**	**Maximum**	**Minimum**	**Maximum**	**Minimum**	**Maximum**	**Minimum**
Open Area Velocity: 0 to 4000cfm	Standard	Standard	50	30	51	37	100	81
Special Application High Sensitivity Velocity: 0 to 4000cfm	High	Enhanced	100	30	79	37	N/A	N/A
Special Application Low Sensitivity Velocity: 0 to 4000cfm	High	Standard	50	30	51	37	N/A	N/A
DUCT Applications 50 m Velocity: 0 to 4000cfm	High	Standard	50	30	51	37	N/A	N/A
DUCT Applications 100 m Velocity: 0 to 4000cfm	High	Enhanced	100	30	79	37	N/A	N/A

Product Listings

- UL
- CSFM
- FDA
- FCC

Regional approvals listings and regulatory compliance vary between product models. Refer to www.xtralis.com for the latest product approvals matrix.

Document: 36402_A1

Part Number: AD36402-000

This page is intentionally left blank.

Table of Contents

1 Introduction **3**
1.1 Features 3

2 Product Information **5**
2.1 Detector Components 5
2.2 How the VEA-040-A00-UL works 5
2.3 Front Panel 6
2.4 Internal Buttons 7
2.5 Communication Ports 8
2.6 VESDAnet 9
2.7 Specifications 9
2.8 Dimensions 12

3 Air Sampling Network **15**
3.1 Design Guidelines 15
3.2 Installation Guidelines 19

4 Installation **21**
4.1 Prepare the Detector 21
4.2 Mounting 23
4.3 Wiring 30
4.4 Powering Up 38
4.5 Installation Checklist 39
4.6 Preliminary System Check 39

5 Configuration **41**
5.1 Communication between Xtralis VSC and the detector 41
5.2 Connecting to the Detector 45
5.3 Security 48
5.4 Commands 49
5.5 Configuration Options 63

6 Commissioning **79**
6.1 Hand Over 79

7 Maintenance **81**
7.1 Standby 81
7.2 Opening the Door 82
7.3 Removing the Fascia 83
7.4 Replacing the Filter 85
7.5 Replacing the Pump 86
7.6 Replacing the Rotary Valve 91
7.7 Replacing the Smoke Sensor Module 95
7.8 Spare Parts 100

8 Troubleshooting **101**
8.1 Detector Status Information 101
8.2 Fault Reporting through Relays 102
8.3 Troubleshooting with Xtralis VSC 102

A StaX Modules **103**
A.1 Local Relay StaX 103

B Glossary **121**

This page is intentionally left blank.

1 Introduction

The VESDA-E VEA-040-A00-UL is an aspirating smoke detector (ASD) that provides early warning of fire conditions by drawing air samples through a multi-hole addressable microbore tube air-sampling network.

Figure 1-1: VESDA-E VEA-040-A00-UL Aspirating Smoke Detector

The detector easily interfaces with fire warning and fire suppression release systems, and can be integrated into a building management system (BMS).

1.1 Features

The VEA-040-A00-UL detector contains the following features:

- Pinpoint addressability with superior detection compared to spot detectors
- 40 addressable microbore tubes with individual sampling points
- Assured detection with end to end system integrity monitoring
- Interruption-free business operation with centralized testing and maintenance
- Single sampling point or single tube blockage detection
- Automatic sampling point cleaning
- Three sensitivity settings for the sampling points
- Variable length capillary tubes, up to 328 ft (100 m)
- Laser-based absolute smoke detection
- Dual stage filtering and clean air barrier for optics protection
- Reliable linear pump technology
- LEDs for alarm and fault signalling
- Seven programmable relays
- Two GPIs, monitored and unmonitored
- PC software support
- iVESDA app for system monitoring on mobile devices
- IP 40 enclosure (not UL tested)
- Easy mounting with steel support bracket
- Field replaceable filter, smoke sensor module, pump and rotary valve
- VESDAnet networking
- Ethernet 100 base T
- WiFi, 802.11 b/g/n
- Local host-mode USB port
- Easy cable termination access
- Event Log (20,000 events)

This page is intentionally left blank.

2 Product Information

2.1 Detector Components

The VEA-040-A00-UL detector contains field-replaceable Filter, Pump, Smoke Sensor Module and Rotary Valve components. These are shown below in Figure 2-1.

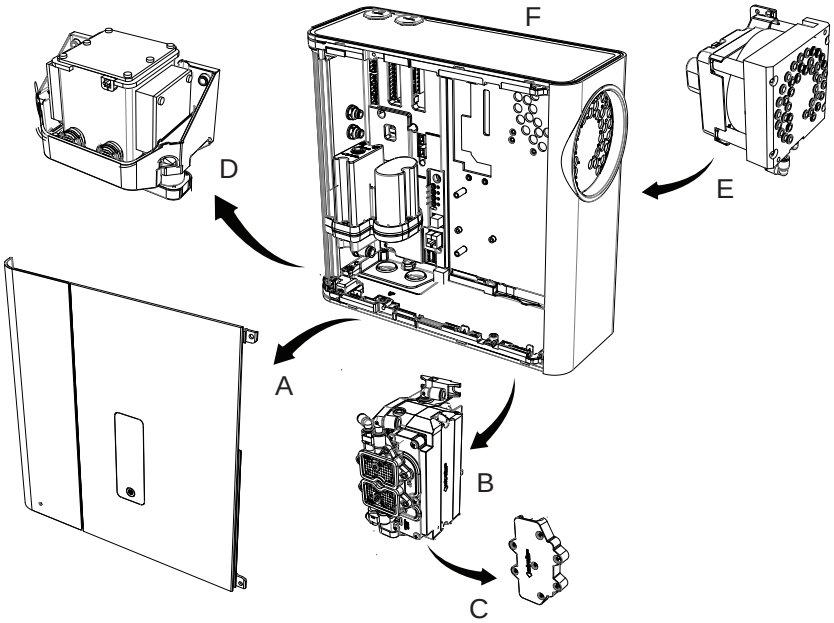

Legend	
A	Fascia
B	Smoke Sensor Module
C	Filter
D	Pump
E	Rotary Valve
F	Base

Figure 2-1: Detector components

Refer to Chapter 7 for further information regarding maintenance scheduling and availability of spare parts.

2.2 How the VEA-040-A00-UL works

The VEA-040-A00-UL detector draws a combined air sample from a network of microbore flexible tubing from all sampling points in the protected area, then filters and analyzes the sample in laser detection chambers in the smoke sensor module. When smoke particles are detected and the smoke level reaches set alarm thresholds, the system will raise appropriate alarm conditions. After a Fire 1 alarm is raised, the system will sequentially scan the sampling locations via the rotary valve to identify one or more sampling locations with the fire alarm event. To assist in investigation of the source of a fire, if the system is in Pre-Alarm, the user can initiate a smoke scan of all sampling locations.

The VEA-040-A00-UL uses a vacuum pump which provides superior detection times for long tube lengths. The system monitors the airflow within the installation, allowing detection of breakages or blockages of individual sampling points and sampling tubes at set intervals, with faults indicated on the display and to the monitoring equipment.

Alarms and fire location can be signaled via Relays and VESDAnet. It is mandatory to connect Fire 1 relay wiring to the FACP for primary alarm reporting. Ethernet and WiFi can be used for configuration and secondary monitoring, and a USB interface is provided for field installation and maintenance. The optional Relay StaX module can be used to identify and signal fire source locations on a fire panel loop. Refer to Section A.1 for further information.

A series of LEDs display Alarm, Trouble, Disable and detector power on status. A button allows the user to Reset or Disable the detector.

2.3 Front Panel

The VEA-040-A00-UL detector provides the following information and control capability:

- **Status LEDs:** Alert, Action, Fire 1, Fire 2, Disabled, Fault and Power.
- **Controls:** Reset and Disable button.

2.3.1 Status LEDS

The VESDA-E VEA-040-A00-UL detector features a range of LED Indicators which illuminate when their respective activation conditions are met.

Table 2-1: LED Indicators

LED	Symbol	Description
Fire 2		The Fire 2 LED is lit when the Fire 2 Alarm threshold is reached.
Fire 1		The Fire 1 LED is lit when the Fire 1 Alarm threshold is reached.
Action		The Action LED is lit when the Action threshold is reached.
Alert		The Alert LED is lit when the Alert threshold is reached.
Disabled		The DISABLED LED is lit continuously when the detector is disabled and flashes once every two seconds when the detector is in Standby mode.
Fault		The FAULT LED is lit when a fault condition is detected. Refer to Chapter 8 for information on troubleshooting.
Power		The POWER LED illuminates when the detector is powered up.

Notes:

- The LEDs are tested during the power up cycle. To manually test the LEDs, run the Lamp Test using Xtralis VSC or iVESDA.

2.3.2 RESET / DISABLE Button

Figure 2-2: Reset / Disable Button

Resetting the detector unlatches all latched alarms and faults, returns relays to their normal state and clears the active event list in Xtralis VSC or iVESDA.

- To reset the detector, press this button once.

To assist in determining the location of a fire, when the system is reset and if the system is in Pre-Alarm, the detector will initiate a smoke scan of all sampling locations. When the system is reset and there is no alarm condition, the detector will perform a flow scan to ensure that there are no remaining flow fault conditions. Flow scan progress can be observed using the detailed status screen of Xtralis VSC (refer to Section 8.1.1 on page 101) and, if required, the flow scan can be canceled using Xtralis VSC.

Disabling the detector disables all the output relays associated with the detector. The pump remains active.

- To disable the detector, press and hold the button for approximately 4 seconds, until the DISABLED LED illuminates continuously.

- To re-enable the unit, press and hold the button for approximately 4 seconds, until the DISABLED LED deactivates continuously.
- While the detector is disabled, any faults may be cleared by pressing this button once.

The button will not operate if:

- the detector is disabled through the GPI function; or
- the RESET / DISABLE button has been configured as "locked out". Refer to Section 5.5.13 on page 77 for further information.

2.4 Internal Buttons

AutoConfig

- To normalize the detector, press and hold the button until the AutoConfig LED illuminates continuously (approximately 2 seconds), then release the button.
- Cancel the Normalization function by pressing and holding the AutoConfig button for 5 seconds. The LED will turn off.

2.5 Communication Ports

The majority of user operations are performed using software installed on a computer connected to the detector via one of the physical communication ports or WiFi. The correct connection method to use depends on the purpose for connecting to the detector (Figure 2-3).

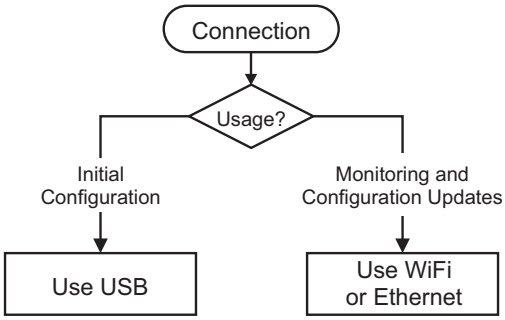

Figure 2-3: Connection Method

The physical communication ports are located on the main board inside the detector. It is necessary to open the front door in order access these ports. Refer to Section 7.2 for information on opening the front door.

USB

The USB port is used for configuration purposes ONLY. It allows direct connection between the VEA-040-A00-UL detector and a PC or laptop running the Xtralis VSC software.

Refer to Section 4.3.4 for information on connecting the USB lead, and Section 5.1.2 for information on creating connection profiles in Xtralis VSC.

Note: The USB port must not be used for permanent field connection. For example, do not use a USB to Ethernet or USB to Wifi adaptor to connect the detector to a LAN using USB.

Ethernet

The Ethernet port is used for configuration and/or monitoring purposes. It enables direct or routed network connection between the detector and a PC or laptop installed with Xtralis VSC.

Refer to Section 4.3.4 for information on connecting the Ethernet lead, and Section 5.1.2 for information on creating connection profiles in Xtralis VSC.

A password is required to access the detector via ethernet connection. It is initially set using Xtralis VSC during configuration with the USB port, and the user is required to enter it when creating an Ethernet connection profile in Xtralis VSC. It is also necessary to enter additional PIN codes to access administrative and distributor functions. Refer to Section 5.3 on page 48 for further information.

WIFI

The WiFi module provides wireless connection of the detector to the building network for the purpose of configuration and secondary monitoring with Xtralis VSC. The VEA-040-A00-UL is joined to a wireless network during initial configuration and remains connected while the access point is available.

Successful connection of the detector to the specified network is indicated by the WiFi LED inside the detector. The detector is then accessible using a device that is connected to the same access point that the detector is connected to, or a device that is joined to the same network as the access point that the detector is connected to.

A password is required to access the detector via WiFi connection. It is initially set using Xtralis VSC during configuration with the USB port, and the user is required to enter it when creating a WiFi connection profile in Xtralis VSC. It is also necessary to enter additional PIN codes to access administrative and distributor functions. Refer to Section 5.3 on page 48 for further information.

2.6 VESDAnet

A VESDAnet network allows:

- the VEA-040-A00-UL detector to report alarms and faults to a Fire Panel using a HLI (High Level Interface).
- configuration and monitoring of devices from a central computer.

Gateway function of the VEA-040-A00-UL

The VEA-040-A00-UL detector also provides a gateway to the VESDAnet for a PC running Xtralis VSC connected to the VEA-040-A00-UL via Ethernet, USB or WiFi.

Refer to the VESDA Communications Guide for further information on VESDAnet network connectivity.

2.7 Specifications

Table 2-2: VEA-040-A00-UL Detector Specifications

Specification	Value
Supply Voltage	18 to 30 VDC (24 VDC Nominal)
Max Power (W) Quiescent	25.6
Max Power (W) Alarm	36.9
Peak Current (A)	3.5
Power Consumption @24 VDC	**Tubes**: 40 **Power (W) (Quiescent)**: 24.0 **Power (W) (Alarm)**: 36.9
Ethernet Enabled Add	0.2 W
WiFi Enabled Add	0.5 W
Dimensions (WHD)	13.9in x 13.2in x 5.33in (352 mm x 336 mm x 135.5 mm)
Weight	21.8 lbs (9.9 kg)
Operating Conditions Please consult your Xtralis representative for information on operation outside these parameters or where sampled air is continually above 0.015% obs/ft (0.05% obs/m) under normal operating conditions.	**Temperature:** • **Ambient:** 32°F to 102°F (0°C to 39°C) • **Sampled Air:** 32°F to 122°F (0°C to 50°C) • **Tested to:** 32°F to 102°F (0°C to 39°C) **Humidity:** • 5-95% RH, non-condensing
Storage Conditions (Non-operational)	• **Humidity:** Dry (<95%) • **Temperature:** 0° to 85°C • Must not be exposed to sunlight or other radiation sources

Table 2-2: VEA-040-A00-UL Detector Specifications (continued...)

Specification	Value
Sampling Network **Note:** Use metric sampling tubes. Imperial tubes will not fit correctly.	**Microbore Tube Size** • Outer Diameter: 6 mm • Inner Diameter: 4 mm **Microbore Tube Length** • Up to 164 ft (50 m) per tube - Open Area • Up to 328 ft (100 m) per tube - Special Application **Flow Monitoring** • Single tube blockage and breakage detection Refer to Chapter 3 for further information.
Relays	• 7 programmable relays • Contacts rated 2A @ 30 VDC (Resistive) • Programmable to latch or not latch alarm or fault states
IP Rating	IP 40 (not UL tested)
Mounting	Upright position on a solid surface with steel support bracket or directly to mounting surface.
Cable Access	4 x 1 in (25 mm) cable entry ports
Cable Termination	Screw terminal blocks (0.2 - 2.5 mm², 24-14 AWG) **Note:** Use 18 AWG (1.1 mm²) or larger wire diameter for power connections.
Interfaces	• USB (Type 2) • Ethernet (RJ45) • WiFi, 802.11 b/g/n
Detection Chamber Sensitivity	0.006%/ft (0.020%/m) - 4.88%/ft (16%/m)
Fire-1 Alarm Thresholds at the Sampling Point	• Standard: 2.5 %/ft (8.0%/m) • Enhanced: 1.3%/ft (4.0%/m) • High: 0.5%/ft (1.6%/m)

Table 2-3: Key Software Features

Event Log	Up to 20,000 events stored on FIFO basis with time and date stamp: • smoke level • user actions • alarms • faults
Four Alarm Levels	Alert, Action, Fire1 and Fire2
Two Fault Warning Levels	Maintenance and Major Fault
Maintenance Aids	• Flow monitoring • Event reporting via VESDAnet and event log

Table 2-4: Ordering Information

VESDA-E VEA-040-A00-UL Aspirating Smoke Detector with LEDs	VEA-040-A00-UL
VESDA-E VEA 40-Relay Local StaX	VER-A40-40-STX

Notes:

- For the spare parts list, refer to Table 7-1
- For the microbore tube and tube accessories refer to the relevant data sheet. Refer to data sheet (Doc. no. 29730) for the sampling point part numbers.

2.8 Dimensions

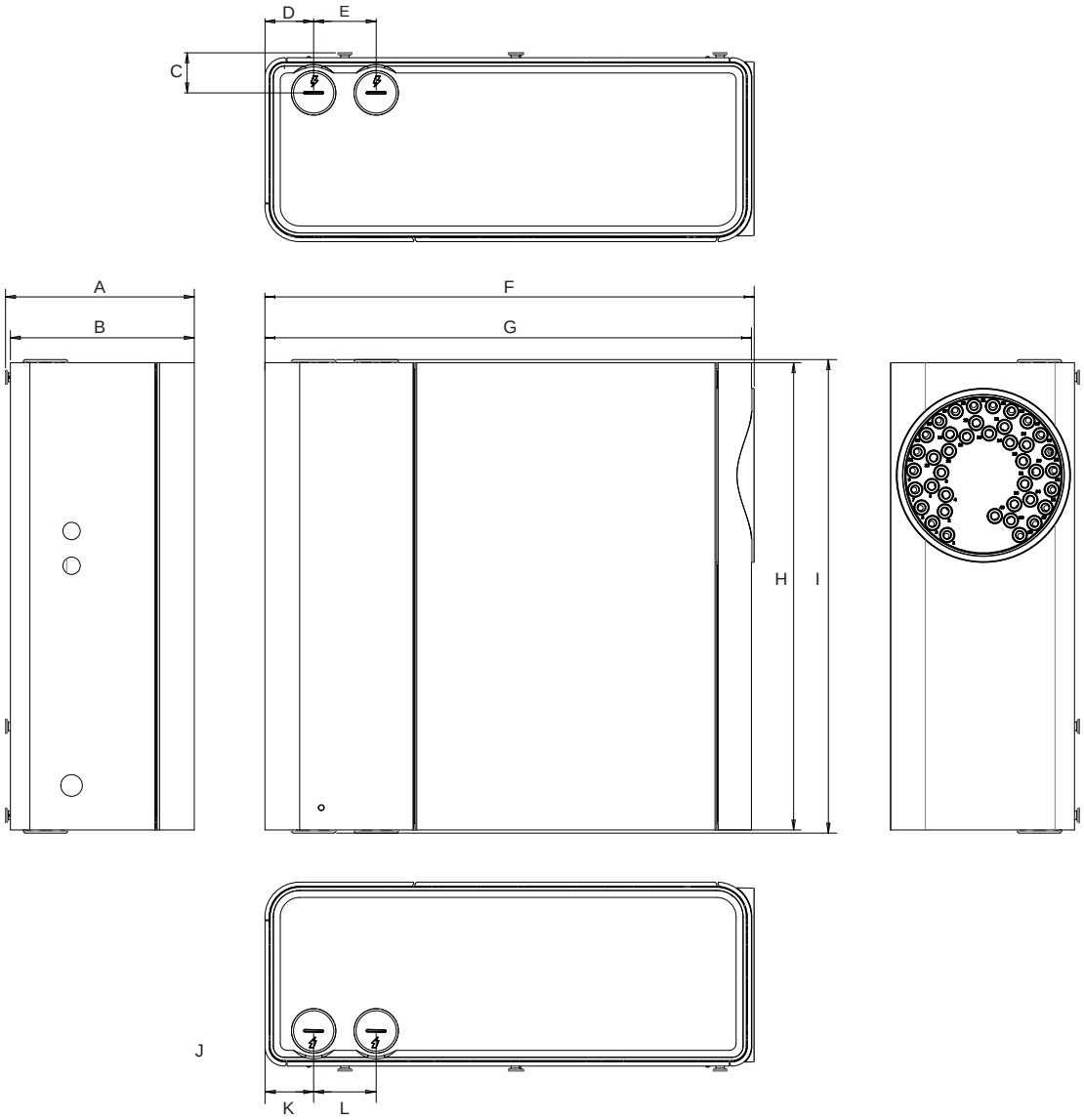

	mm	inch
A	135.8	5.3
B	132.3	5,2
C	28.8	1.1
D	35.0	1.4
E	45.0	1.8
F	352.05	13.9
G	350.05	13.8
H	336.0	13.2
I	340.5	13.4
J	28.8	1.1
K	35.0	1.4
L	45.0	1.8

Figure 2-4: Front, top, bottom and side dimensions

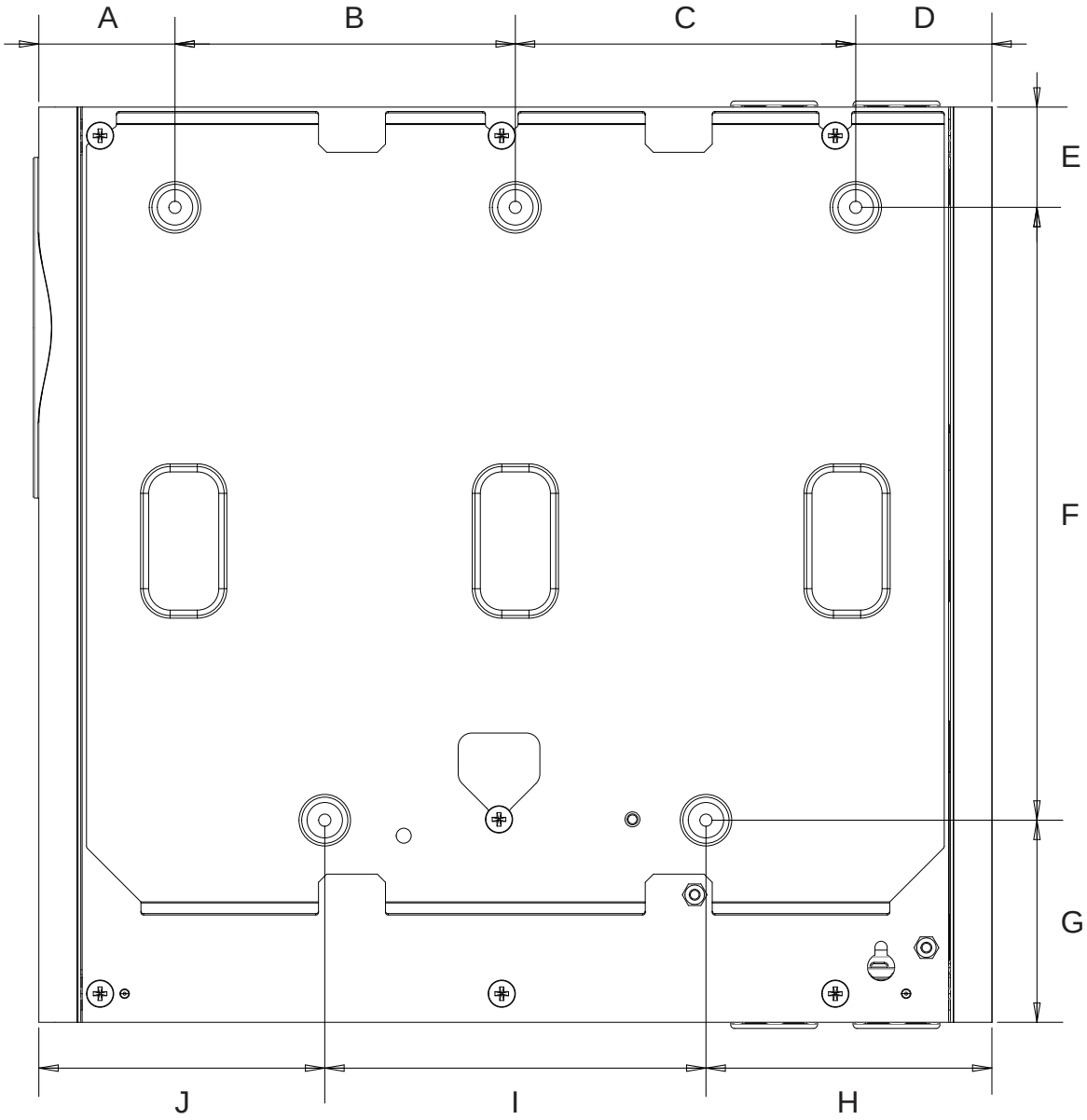

	mm	inch
A	50	2.0
B	125	4.9
C	125	4.9
D	50	2.0
E	36.80	1.4
F	225	8.9
G	74.20	2.9
H	105	4.1
I	140	5.5
J	105	4.1

Figure 2-5: Rear dimensions with optional Mounting Bracket

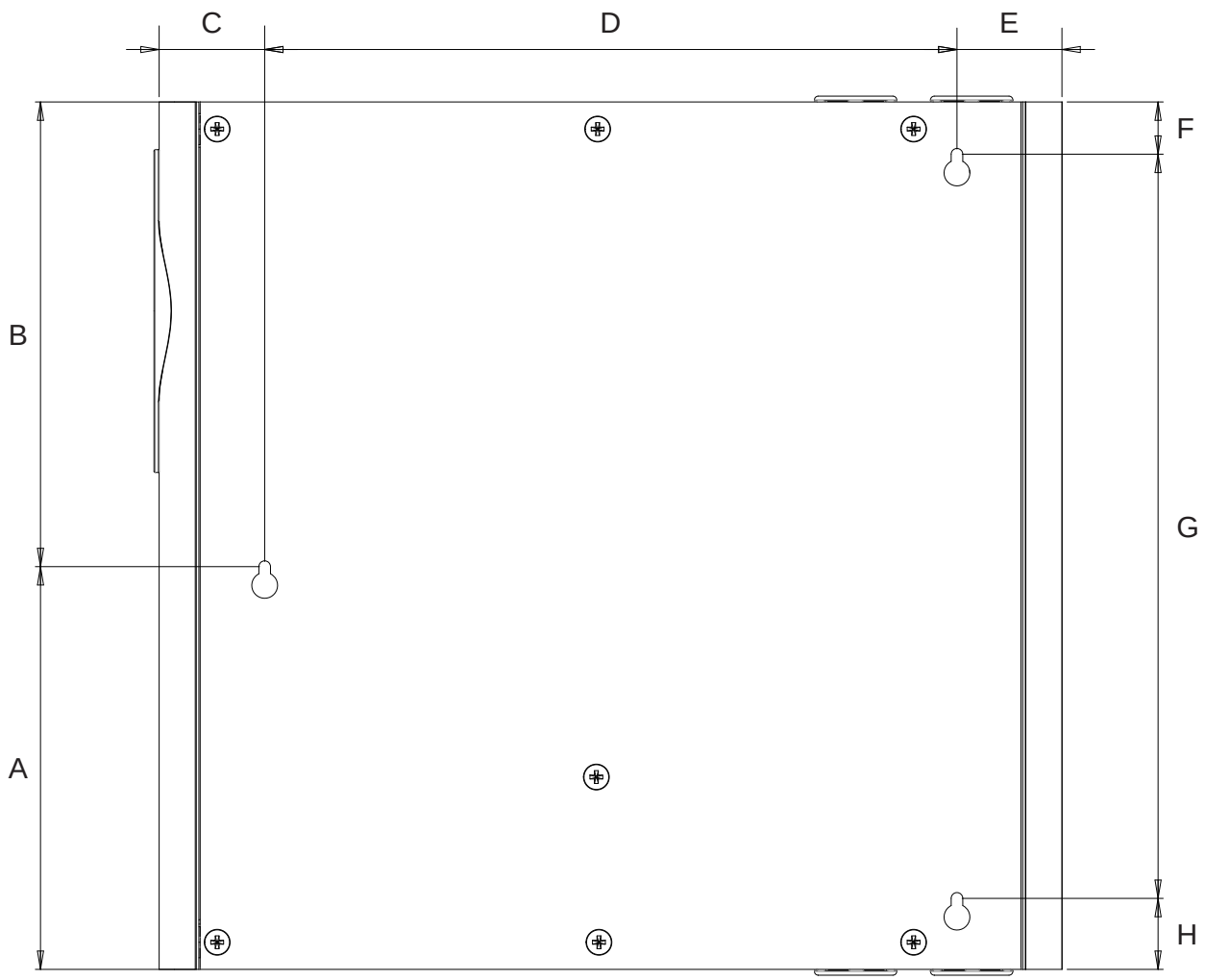

	mm	inch
A	156	6.1
B	180	7.1
C	40.91	1.6
D	268.39	10.6
E	40.70	1.6
F	20.25	0.8
G	288.25	11.3
H	27.5	1.1

Figure 2-6: Rear Dimensions with hole locations for direct mounting

3 Air Sampling Network

The VEA-040-A00-UL detector uses Microbore tubing to provide air sampling points.

For reliable smoke detection and flow monitoring performance, the detector must be connected to a balanced network comprised of between 6 and 40 equivalent length tubes.

3.1 Design Guidelines

Before You Start

To design an efficient tube network, you will need to:

- Have knowledge of your local codes and standards.
- Undergo accreditation training in tube network design.
- Have access to a floor plan for the protected area. The floor plan must include details of existing or proposed fixtures, fittings and equipment.
- Have information about the purpose of the area to be protected.
- Determine the protection level required.

Design Process

To design an effective microbore network, it is suggested that the following steps are taken. The order in which these are completed may differ with each project.

- Gather site information.
- Assign Tube Numbers and names for later entry into Xtralis VSC. Tubes must be consecutively used per their assigned number. Tube numbers are pre-allocated (1-40 for the detector).
- Plan and map the tube network in a CAD application. If necessary, use the VEA Microbore Tube Length Calculator (Document 29261) to determine tube lengths when varied length tubes are used.
- Record the details of the optimum design.

3.1.1 Gather Site Information

As a first step it is essential to gather information about the site to be protected. For an existing site this may include a site survey prior to designing a microbore network. Most of the information required for an effective tube network design can be determined by a site visit. For sites yet to be constructed or where a site visit is not possible a site plan can be used to aid in design. The information required through a site survey includes:

- Site layout and measurements
- Regulatory requirements
- Air flow within the protected area
- The purpose for which the site is to be used
- Construction of the site (beams, beam pockets, and microbore tube obstructions)

3.1.2 Plan and Map the Sampling Network

Regulatory Requirements

Local codes and standards for aspirating smoke detectors will have precedence over any parameters suggested by Xtralis. Some of the key requirements are listed below.

- Maximum permissible transport time
- Maximum area for a fire zone
- Area of coverage per sampling hole (this is usually same as a spot or point detector)
- Maximum spacing between sampling points
- Maximum area for aspirating systems
- Air changes per hour

Fire Zones and VESDA Addresses (Zones)

Fire zones are created to meet regulatory requirements, whereas, VESDA Addresses (also known as VESDA Zones) are used to associate detectors with remote devices. Each detector has a single VESDA zone number assigned to it during commissioning.

Planning the Network

In planning a sampling network, you must:

- Have an understanding of the area to be protected
- Identify any forced air ventilation and air flows (fans, air conditioners etc.)
- Take into account any customer specifications
- Determine if the design needs to address ceiling and under floor voids

The microbore tube network and sampling points are laid out using a CAD application and integrated into the construction drawings.

System Performance

System performance is mainly dependent upon transport time and alarm thresholds set on the detector.

Alarm thresholds can be configured using the Xtralis VSC software. Transport time is determined by the length of the microbore tubes used on the detector. There is no provision for the user to adjust the transport time and there is no tube modelling tool required for VEA.

The transport time is given in Table 3-1 for various tube lengths.

Table 3-1: Transport time for various tube lengths

Maximum Tube Length	Longest Transport Time
98 ft (30 m)	Up to 40 seconds
131 ft (40 m)	Up to 46 seconds
164 ft (50 m)	Up to 52 seconds
197 ft (60 m)	Up to 60 seconds
230 ft (70 m)	Up to 65 seconds
262 ft (80 m)	Up to 70 seconds
295 ft (90 m)	Up to 75 seconds
328 ft (100 m)	Up to 80 seconds

Recording Sampling Network Design Specifications

Keeping an accurate record of the sampling network design specifications assists the installation engineer to correctly configure the sampling network. This information is also useful to complete the commissioning form. Information that needs to be recorded includes:

- Site name and address
- Site measurements and layout
- Factors requiring special attention
- The number and location of VESDA addresses (zones)
- List of tube number and locations of respective sampling points
- Overlay showing the tube network layout with sampling hole positions
- Transport times
- Alarm thresholds

3.1.3 Tube Network Configuration

A VEA-040-A00-UL tube network requires between 6 and 40 Microbore tubes, each up to 100 meters (328 feet) in length.

All tubes must have equal airflow. This is achieved by making them all equal in length.

Note: To allow for future repositioning of the sampling point, it is recommended that 6 to 10 ft (2 to 3 m) of tubing be coiled at the sampling point end . This can be achieved from the design stage where required length of coiling is added upfront at the design stage in the total tube length, so when the split length of normal and reduced diameter is calculated using the calculator, it is automatically factored into requirements.

Two types of Microbore tube can be used, as listed below in Table 3-2.

Table 3-2: Microbore Tube Properties

Microbore Tube	Outer Diameter	Inner Diameter
Normal diameter	6 mm	4 mm

Note: Use metric sampling tubes. Imperial tubes will not fit correctly.

It is recommend that excess tubing be coiled close to the sampling point end (Figure 3-1).

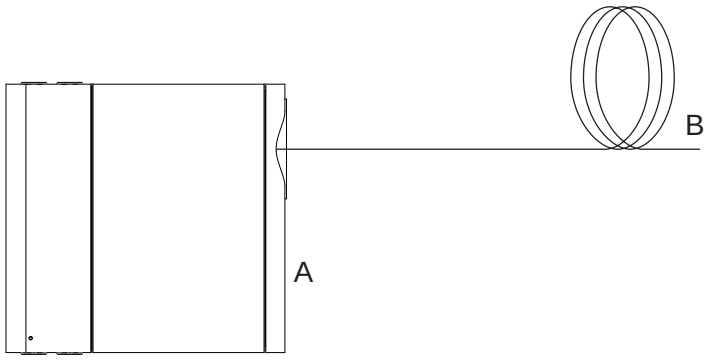

Legend	
A	Detector
B	Excess tubing is coiled

Figure 3-1: Configuration with equal length tubes

Tube inlets are numbered as per Figure 3-2 below. Unused inlets on the detector should be blocked using blanking plugs (P/N VSP-998).

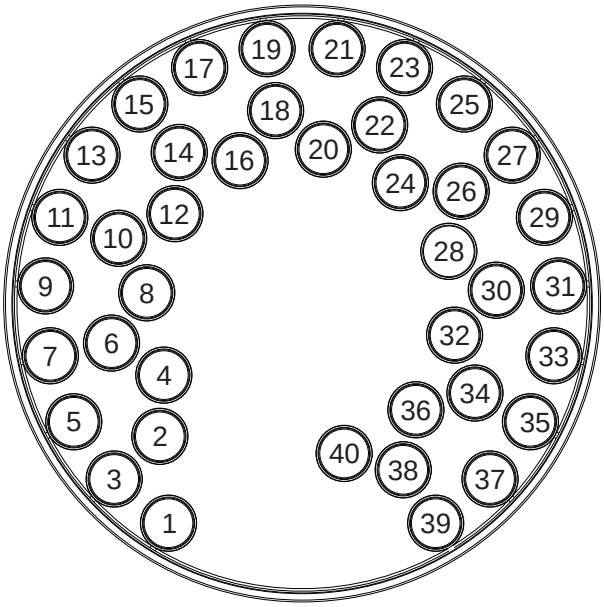

Figure 3-2: Input numbering

Caution: Do not insert ANY object into the inlet ports other than the normal diameter tube. This is to avoid damage to the fitting.

Ensure that Microbore tubes are never glued anywhere in the tube network, including to the inlets of the detector. Tubes can be joined using appropriate joiners.

Ensure that the tubes are fully inserted into the detector's tube inlets.

The provided tube cutter or a similar tool must be used to cut the tubes. Ensure that the tubes are cut so as to leave the end of the tube circular. Do not use tools such as side cutters which could squash the tube during cutting and leave the end of the tube oval shaped. If the end of the tube is oval shaped this could cause an air leak because the tube may be difficult to insert correctly. This could then cause airflow normalisation and sample point testing to fail.

The diagram below shows correctly cut and badly cut tube ends.

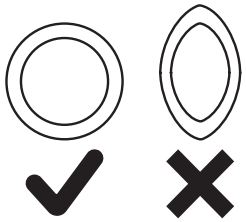

Figure 3-3: Correctly cut and badly cut tube ends

3.1.4 Managing the Exhaust Air

Air is expelled from the detector via the exhaust port on the left side of the unit enclosure. See Figure 4-2.

3.2 Installation Guidelines

These instructions are the basic sequence of steps you will be required to perform when installing the sampling network. The normal procedure for installation is:

1. Check the design documents to gather information on the tube network design specifications.
2. Mark the spot where the detector is to be installed.
3. Run the microbore tubing from the detector towards the sampling point, ensuring there are no kinks. Coil any excess tubing close to the sampling point end.
4. Mount the microbore tubing in the appropriate positions as specified by the design documents.
5. Check if the design documents require sampling end points and install as required.
6. If entry points are required to an enclosed area like a cabinet, drill an appropriate size hole in the cabinet top or use an existing cable entry port.
7. Install the detector. For further information refer to Chapter 4.
8. Insert the microbore tubing into the detector. Do not glue the tubes to the tube inlets.
9. Update the design documents with any changes that may have been made to the original plan.
10. Use appropriate labels and tag the microbore tubing and sampling holes.
11. Update the design documents with any further changes that may have been made during the tests, and give a copy of the updated design documents to the person commissioning the system.

3.2.1 Microbore Network Components

Microbore Tubing

Sampling is achieved through the Microbore flexible tubing with 6 mm (0.24 in) OD and 4mm (0.16 in) ID.

Sampling Points

There are two types of sampling points available, standard sampling points or surface mount sampling points. Standard sampling points are used where a ceiling void is available with microbore tubing laid out in the ceiling void. The surface mount sampling point is used on hard ceilings. Both types of sampling points are available for 6mm and 4mm tubes.

Figure 3-4: VEA Standard Sampling Point

Figure 3-5: VEA Surface Mount Sampling Point

This page is intentionally left blank.

4 Installation

The VEA-040-A00-UL detector is shipped with the following components:

- One VESDA-E VEA-040-A00-UL detector
- 1 Installation Sheet
- 1 Mounting bracket
- 1 Mounting template for direct mounting
- 1 End of Line resistor for the monitored GPI
- 1 Tube cutter (taped inside the detector door)

Check all components for damage and refer any concerns to your authorized representative.

Depending on the nature of the installation, it may be necessary to procure the following items:

- The latest revision of this full product guide can be downloaded from the partner extranet at www.xtralis.com.
- A 24 VDC Power Supply and backup battery, compliant with local fire protection codes and standards
- Screws and inserts that are appropriate for the installation location.
- Type A to Type B USB Interface Lead, required for initial configuration of the detector (Figure 4-1).
- Wrist strap for ESD prevention.

Figure 4-1: Type A to Type B USB Interface Lead

4.1 Prepare the Detector

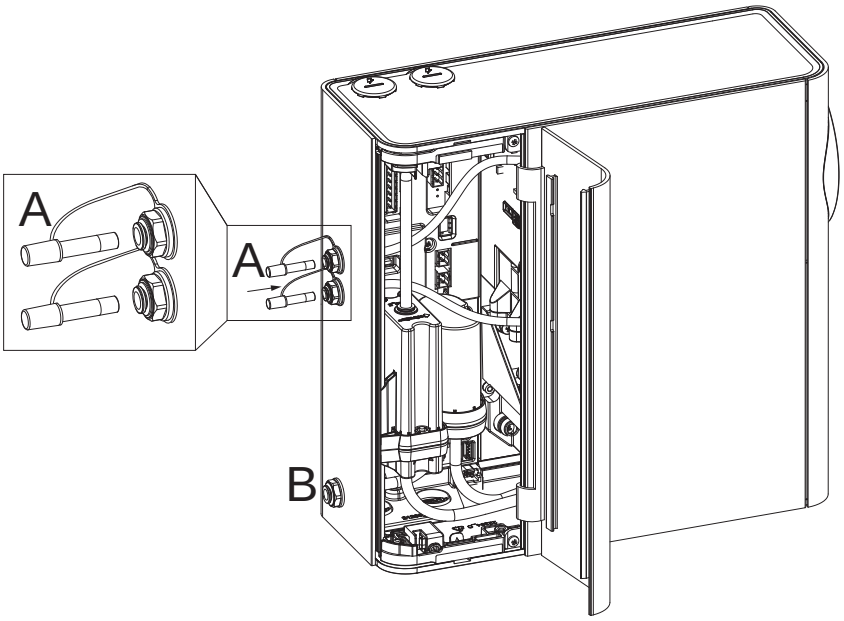

Figure 4-2: Smoke Test Ports (A) and Exhaust Port (B)

4.1.1 Smoke Test Port Plugs

Ensure that the two smoke test port plugs (A) (Figure 4-2) are in place and fully inserted.

4.1.2 Exhaust port

Ensure that the exhaust port (B) (Figure 4-2) is open.

4.1.3 Wiring Inlets

Remove cable inlet plugs as required (Figure 4-3). Place a large screwdriver in the large slot and twist (A), or use a small screwdriver in the side slots (B) to lever the plug out. Use the edge of the detector (C) for a lever point to avoid marking the case.

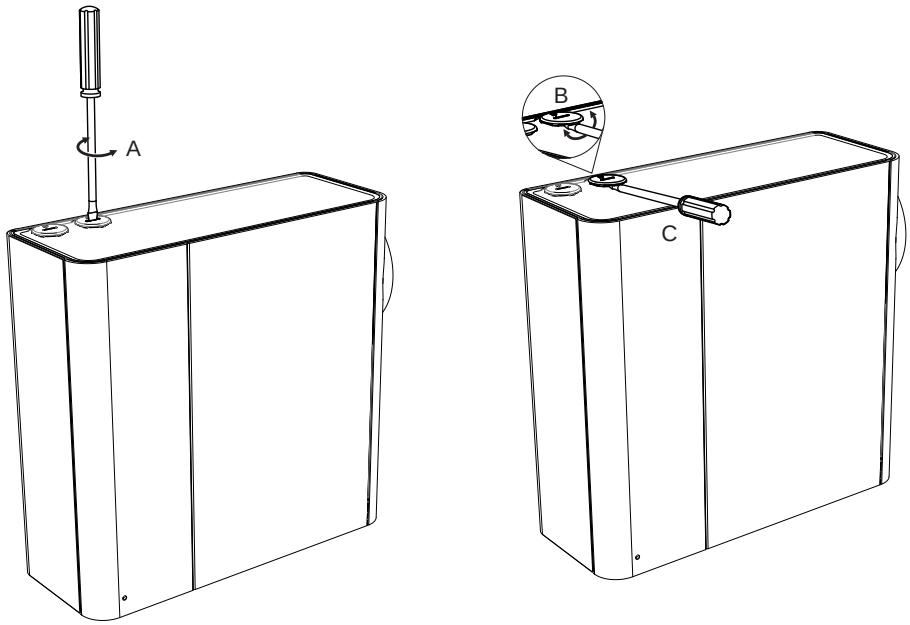

Figure 4-3: Remove Cable and Conduit Inlet Plugs

4.2 Mounting

The VEA-040-A00-UL detector must be mounted in an upright position on a solid surface. Do not mount the detector with a sideways or inverted orientation.

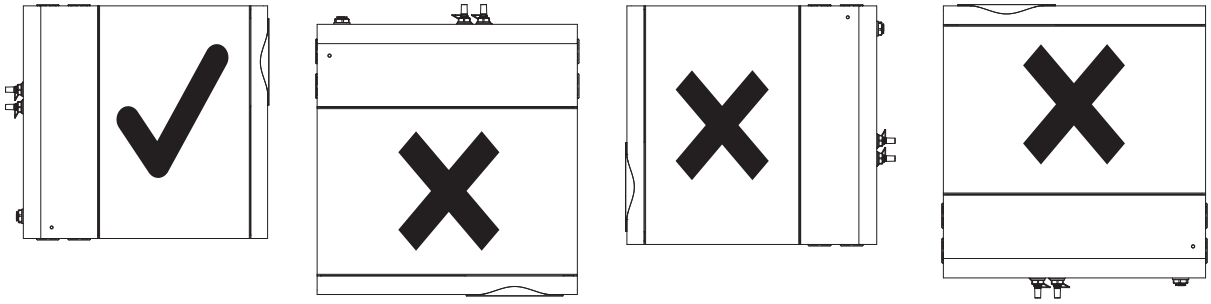

Ensure that there is sufficient clearance to mount the detector (Figure 4-4), noting the location of air sampling tubes and cable entry points. Installation must provide for sufficient movement in all Microbore tubing and electrical conduit to allow easy fitment and removal.

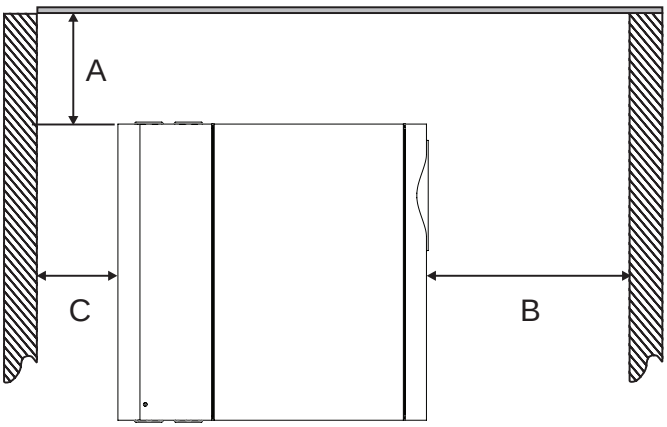

Legend	
A	Min. 50 mm (2 in.) between ceiling level and the top of the detector (where fitted).
B	A minimum clearance of 500 mm (20 in.) is required between the right-hand side of detector and a wall or obstruction. **Mounting bracket:** Refer to Section 4.2.2 for further information. **Direct mounting:** Refer to Section 4.2.3 for further information.
C	A minimum clearance of 150 mm is required between the left side of the detector and a wall or obstruction.

Figure 4-4: Mounting location

4.2.1 Remove Transit Screws

Remove the two transit screws (A).

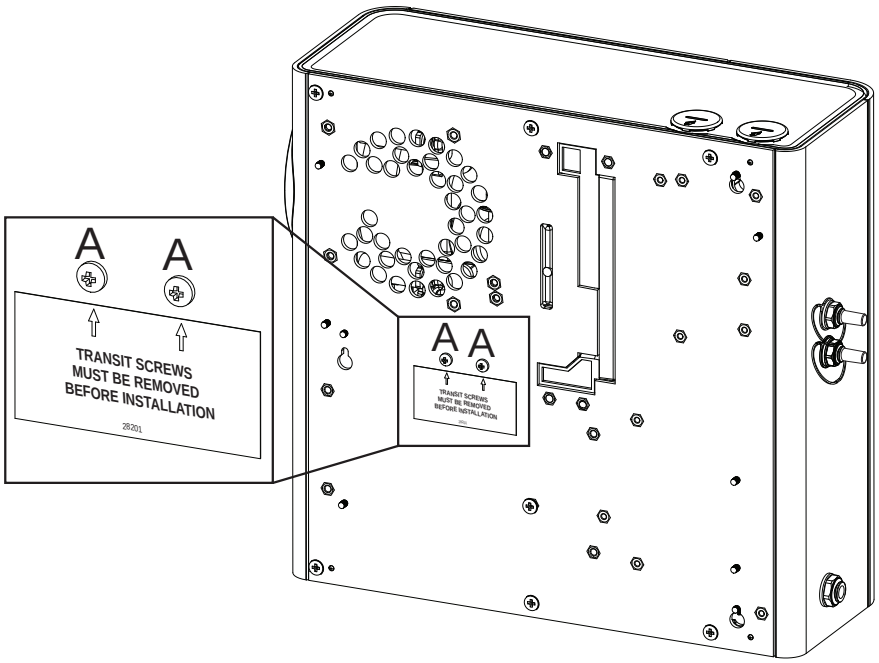

Figure 4-5: Remove transit screws

Note: The transit screws are used to hold the air pump during transit. If the screws are not removed excessive noise will be generated.

4.2.2 Mounting the Detector with the Mounting Bracket

1. Position the mounting bracket (A) to allow electrical conduit (B) to line up horizontally with the alignment marks (C) (Figure 4-6).

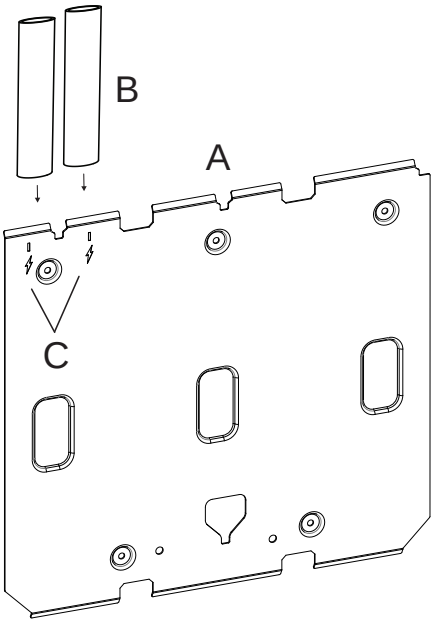

Legend	
A	Mounting bracket
B	Electrical Conduit
C	Conduit alignment marks

Figure 4-6: Position Mounting Bracket in line with conduit

2. Mark the mounting surface through five recessed screw holes (D) on the mounting surface (Figure 4-7) and drill pilot holes.

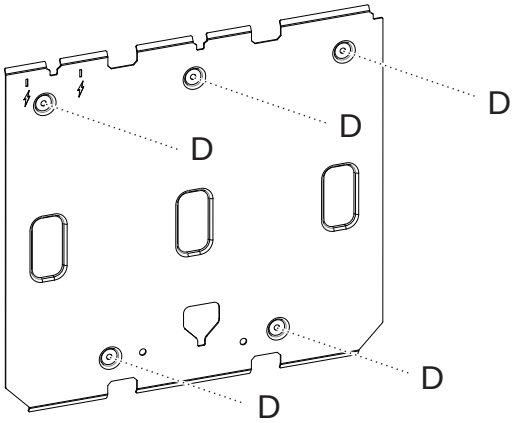

Legend	
D	Screw holes

Figure 4-7: Mark keyholes

3. Secure mounting bracket to mounting surface by tightening screws.
4. Align the four mounting studs (E) on the rear of the detector with the mounting stud slots on the mounting bracket, and slide the detector down until the top of the detector is flush with the top of the mounting bracket (Figure 4-8).

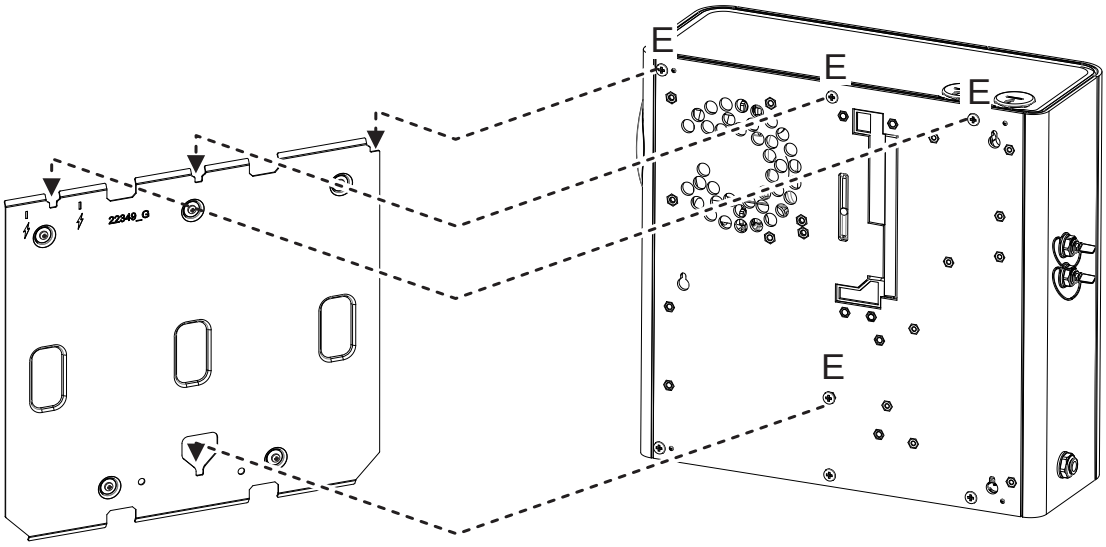

Legend	
E	Mounting studs

Figure 4-8: Mounting the detector

5. Open the door on the front of the detector (Figure 4-9). Refer to Section 7.2 on page 82 for further information on how to open the door.
6. Remove the yellow tape covering the partially inserted locking screw (F).
7. Tighten the locking screw (F). This secures the detector to the mounting bracket.

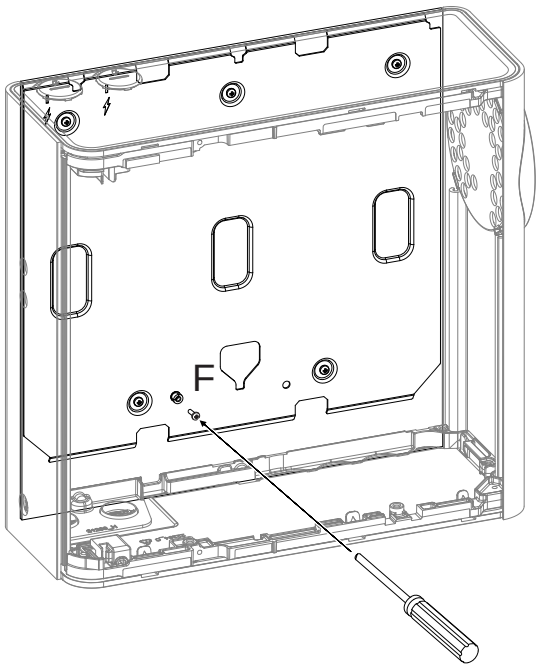

Legend	
F	Locking screw

Figure 4-9: Locking Screw

4.2.3 Mounting the Detector using the Mounting Template

1. Position the mounting template to allow electrical conduit (A) to line up with the alignment marks (B) (Figure 4-10):
2. Secure the mounting template to the wall.

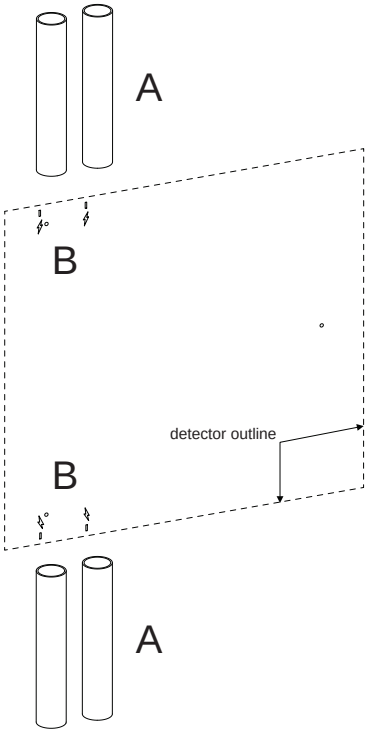

Figure 4-10: Position mounting template

3. Insert two M4 button head screws at positions C and D such that the screw head is protruding 7 mm from the wall (Figure 4-11). Drill a pilot hole at position E for later insertion of a screw at Step 9.

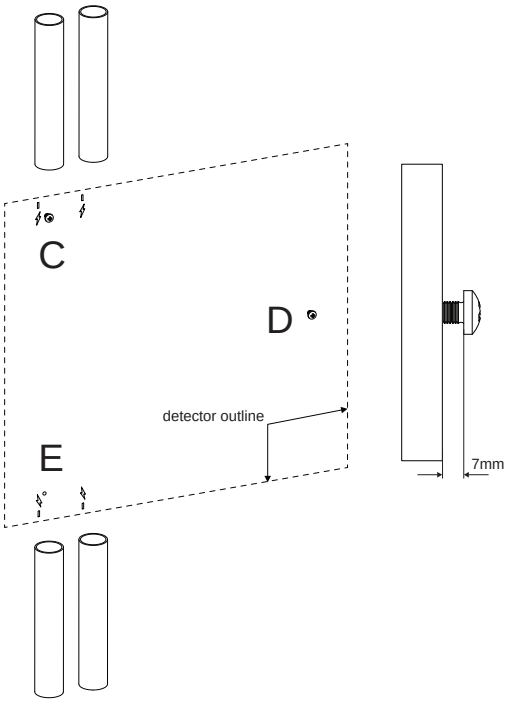

Figure 4-11: Insert mounting screws

4. Position the electrical conduits (A) on the marked center lines (Figure 4-12).
5. Cut the conduits as required to a suitable depth.

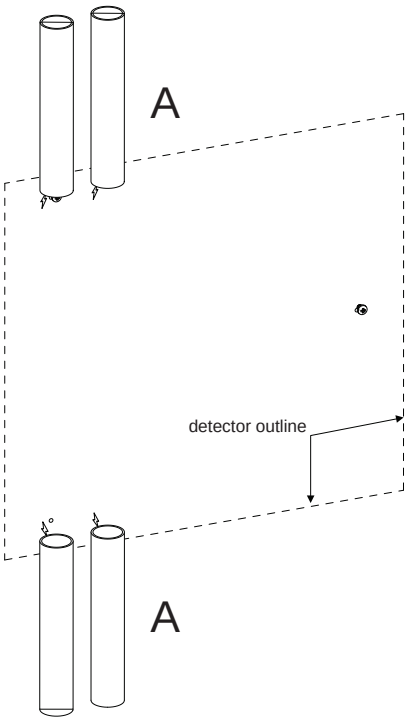

Figure 4-12: Cut the electrical conduit

6. Remove the mounting template.
7. In order to allow the detector to be positioned, retract the electrical conduits.
8. Mount the detector onto the two screws (Figure 4-13).

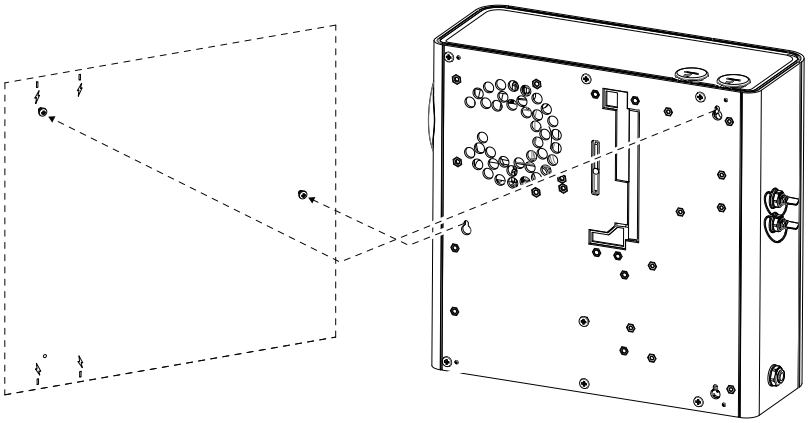

Figure 4-13: Mount the detector

9. Insert an M4 screw at the small end of the detector's bottom-left keyhole, and tighten the other two screws (Figure 4-14).

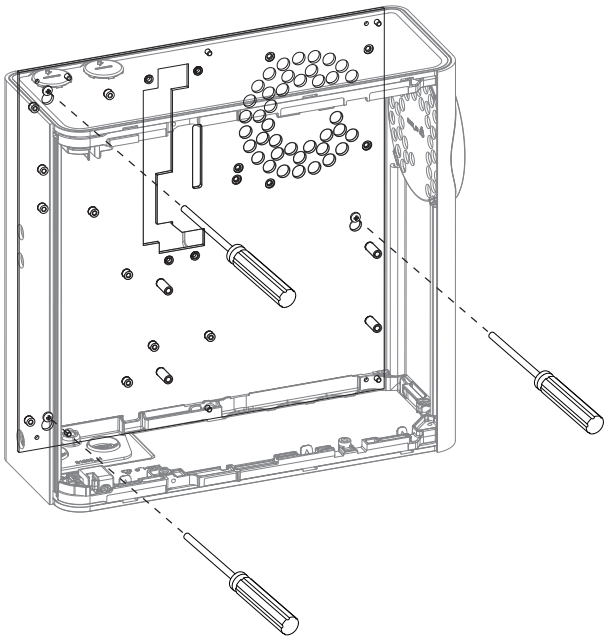

Figure 4-14: Locking screw

10. Insert the electrical conduit.

4.3 Wiring

The screw type terminals located on electrical terminals within the VEA-040-A00-UL detector will accept wire sizes from 0.2 mm² to 2.5 mm² (30 – 12 AWG). Use 1.1 mm² (18 AWG) or larger wire diameter for power connections.

Refer to Codes and Standards Information for Air Sampling Smoke Detection on page iii for code specific requirements.

Note: The VEA-040-A00-UL detector is IP 40 rated, therefore a suitable cable gland or conduit must be used to maintain the IP rating. The IP rating is not UL tested.

Caution: Electrostatic discharge (ESD) precautions need to be taken prior to removing the fascia from the detector in order to prevent damage to sensitive electronic components within the VEA-040-A00-UL.

Attention : Les precausions contre le decharge electrostatique dois etre respecter avant d'ouvrir le panneau du detecteur afin de prevenir au dommage des composants electroniques a l'interieur du VEA-040-A00-UL.

4.3.1 Cabling Inlets

The VESDA-E VEA-040-A00-UL contains four inlets for power, relay and network cabling, located on the upper and lower sides of the detector base. The holes have a diameter of 26 mm (1.02 inch).

Note: To maintain the specified IP rating, cable glands or conduit must be used.

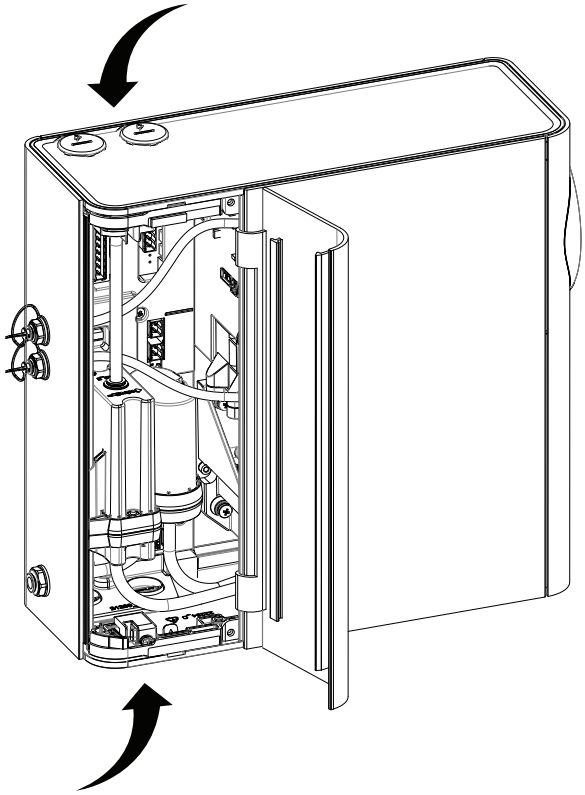

Figure 4-15: Cabling Inlets

4.3.2 Socket Locations

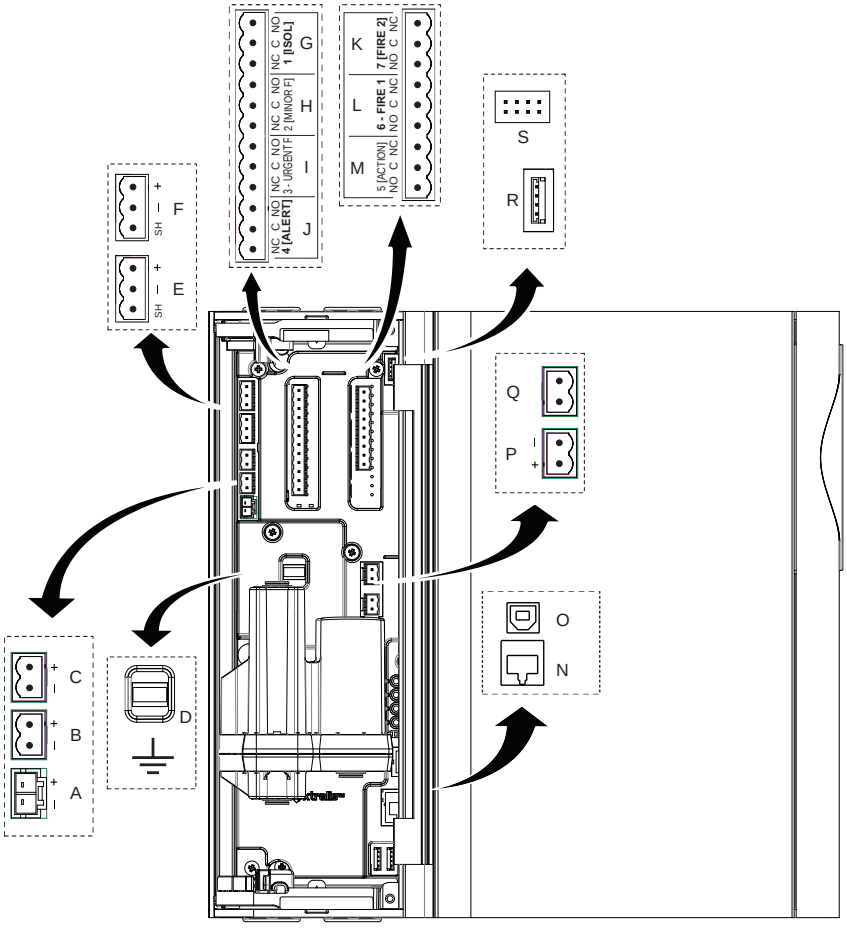

Legend

Power

A	EXP (Expansion) Power
B	RV (Rotary Valve) Power
C	Power In
D	Ground Reference Terminal

VESDAnet

E	VESDAnet B
F	VESDAnet A

Relays

G	1 - Disable (Isolate)
H	2 - Minor Fault
I	3 - Urgent Fault
J	4 - Alert
K	5 - Fire 2
L	6 - Fire 1
M	7 - Action

Comms

N	Ethernet
O	USB

GPI

P	Unmonitored GPI
Q	Monitored GPI

Internal Components

R	Smoke Sensor

Expansion

S	Data

Figure 4-16: Socket Locations

4.3.3 Power Source

Connect a 24 VDC power supply which is compliant with local fire protection codes and standards to the PWR IN socket.

The Relay StaX is powered from the EXP Power socket. Refer to Section 4.3.12 and Appendix A for further information on wiring the Relay StaX.

The detector will not operate if the power supply polarity is reversed.

Caution: Operating the detector when DC supply voltage is outside the specified voltage range may cause damage to internal components. For further information refer to the Product Specifications on page 9.

Attention : Le détecteur de fonctionnement lorsque la tension d'alimentation DC est en dehors de la plage de tension spécifiée peut endommager les composants internes. Pour plus d'informations, se reporter au notice descriptive du produit à la page 9.

Compliance

It is recommended that the power supply be compliant with local codes and standards required by the regional authority. For code-specific information, refer to Codes and Standards Information for Air Sampling Smoke Detection on page iii.

4.3.4 Communication Ports

The front door must be opened in order to access the communication ports. Refer to Section 7.2 for information on opening the front door and Figure 4-16 for the physical location of the ports.

Note: For all connection methods the detector also provides a gateway to all the other devices on the VESDAnet network.

USB

The USB port is used for initial configuration and local maintenance or servicing of the VEA-040-A00-UL using a PC installed with Xtralis VSC software.

Install Xtralis VSC prior to connecting the VEA-040-A00-UL to the PC or Laptop. This ensures that the required USB drivers are present.

Notes:

- The USB port must not be used for permanent field connection. For example, do not use a USB to Ethernet or USB to Wifi adaptor to connect the detector to a LAN using USB.
- Refer to the Xtralis VSC documentation for operating system compatibility information.

Ethernet

The Ethernet port is used for permanent network connection to the VEA-040-A00-UL. An Ethernet lead can be routed through the cable entry ports and plugged into the Ethernet port.

Use a standard Ethernet lead when connecting the VEA-040-A00-UL to a network switch, router or directly to a PC or laptop.

WiFi

The WiFi module provides wireless connection of the detector to the building network for the purpose of configuration and secondary monitoring.

4.3.5 VESDAnet

VESDAnet is a bidirectional data communication network between connected VESDA-E devices. VESDAnet connectivity is available on the VEA-040-A00-UL detector. Refer to Section 2.6 for further information.

It is recommended that RS 485 (Belden 9841 - 120 Ohm) twisted pair cables be used for including the devices in the network.

The network cables are terminated at the VESDAnet A and B Terminals. Cabling from one VESDA-E device is brought into the detector at one terminal and looped out to another device on VESDAnet from the other terminal.

Notes:

- The polarity of the data wires must be maintained throughout the network.
- In order for the detector to be able to detect ground faults on the VESDAnet wiring, the Ground Reference Terminal (Figure 4-16) must be connected to the local ground.

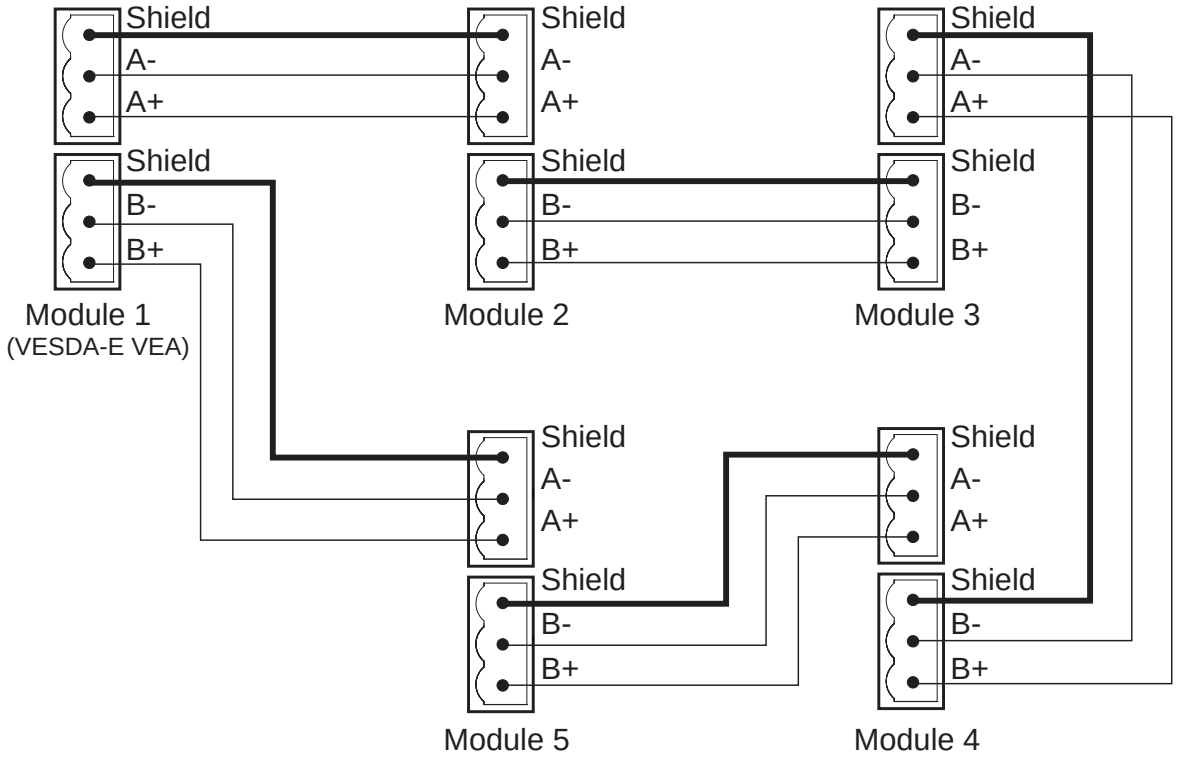

Figure 4-17: Example closed loop VESDAnet network

The VESDA-E VEA-040-A00-UL detector is shipped with the VESDAnet A and B terminals looped. Remove the A and B links prior to connecting the detector to the VESDAnet. If the detector is not to be networked with other devices, then do not remove the A and B links.

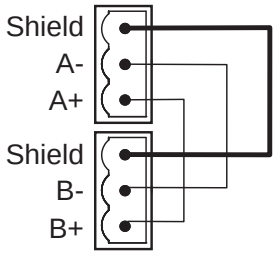

Figure 4-18: Closed loop for standalone detectors with VESDAnet capability

4.3.6 Relays

The relays, located on the main processor card, interface to the Fire Alarm Control Panel (FACP) to communicate faults, alarms and disabled states. The relays can be programmed using Xtralis VSC. Relays 3 and 6 are permanently set for Urgent Fault and Fire 1 respectively. Table 4-2 below illustrates the default assignments of functions (conditions) to relays and summarizes the default behavior of each relay. Section 5.5.10 describes how to configure the relay behavior using Xtralis VSC. It is possible to assign more than one condition to a relay.

Fire 1 Relay

If a detector relay is to be used to signal fire alarm to the Fire Alarm Control Panel (FACP) then the Fire 1 relay must be used.

Fault and Fire 1 Relay Terminals

The Urgent and Minor Fault relays are energized during normal operation while the Fire 1 relay is only energized when a Fire 1 is detected. The operation of the relays is summarized in the following table.

Table 4-1: Typical Relay Operation

URGENT FAULT Relay		All Other Relays	
No Fault (Energized)	**Fault or unpowered state**	**No Fire (De-energized)**	**Fire**
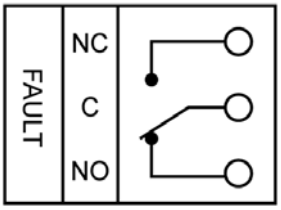	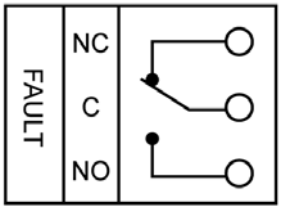	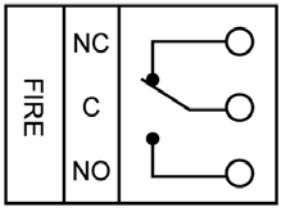	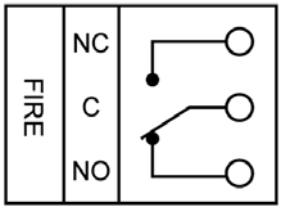

Relay Assignments and Behaviour

- Relays 1, 2, 4, 5 and 7 are fully configurable. For example, Relay 5 could be configured to de-energize on Alert
- Relays 3 and 6 are fixed to Urgent Fault and Fire 1 respectively. These relays may be assigned additional conditions.

Table 4-2: Default Relay Assignments

Relay #	Default Assignment	Default to Normally Energized	Description for default configuration	Configurability
1	Disable (Isolate) and Standby	No	Energizes when an operator disables (isolates) the detector. Also energizes when the operator puts the detector into Standby mode.	Fully configurable
2	Minor Fault	Yes	De-energizes when a Minor Fault is detected.	Fully configurable
3	Urgent Fault	Yes	Default Assignment: Urgent Fault, Disable, Standby De-energizes when an Urgent Fault, Disable or Standby condition is detected Note that Relay 3 is fixed Normally Energized in order to ensure that a fault will be signaled when power to the VEA is removed.	Urgent Fault cannot be removed. Other conditions can be added. Fixed Normally Energized

Table 4-2: Default Relay Assignments (continued...)

Relay #	Default Assignment	Default to Normally Energized	Description for default configuration	Configurability
4	Alert	No	Energizes when the Alert alarm is initiated.	Fully configurable
5	Action	No	Energizes when the Action alarm is initiated.	Fully configurable
6	Fire 1	No	Energizes when the Fire 1 alarm is initiated.	Fire 1 cannot be removed. Other conditions can be added.
7	Fire 2	No	Energizes when the Fire 2 alarm is initiated.	Fully configurable

4.3.7 Unmonitored General Purpose Input (GPI)

The Unmonitored GPI is a programmable input which can be configured to initiate a number of different actions, including, by default, a Remote Reset function. Refer to Section 5.5.9 on page 71 for further information.

A voltage input of between 5V and 30V signals GPI ON. Less than 2V signals GPI OFF. The input is isolated from the system by an opto-coupler device.

4.3.8 Monitored General Purpose Input (GPI) Wiring

The monitored GPI senses contact closure and is configurable to initiate the same actions as the unmonitored GPI. "Remote Reset" is the default setting. A closed contact signals GPI ON and open contact signals GPI OFF. Refer to Section 5.5.9 on page 71 for further information.

A 10K end of line resistor is used to allow the detector to monitor for open circuit faults in the wiring from the detector to the contact. Refer to Section 4.3.11 for information on correct wiring of the End of Line resistor.

4.3.9 Typical Wiring to Fire Alarm Control Panel (FACP)

The diagram below shows the correct way to wire VESDA-E detectors to a conventional fire alarm control panel (FACP).

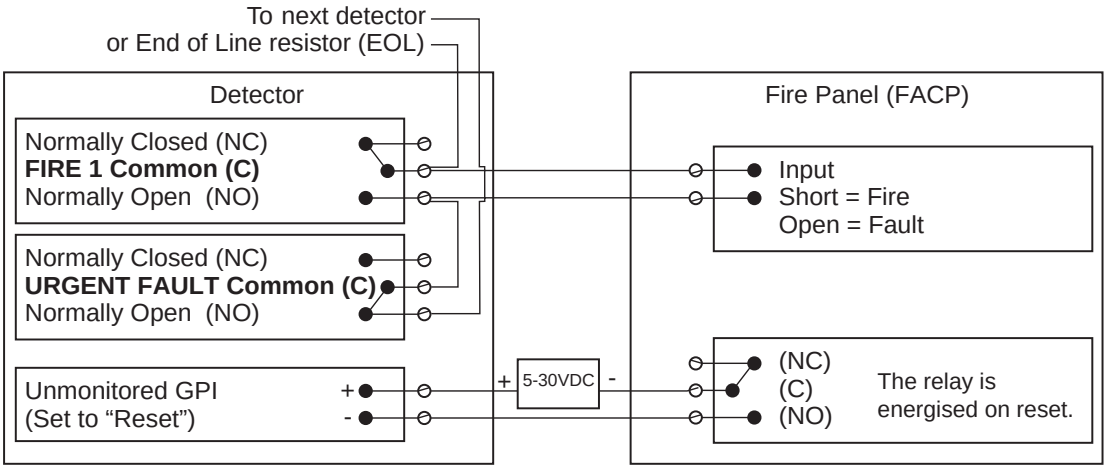

Figure 4-19: Typical wiring to a fire panel with EOL

4.3.10 Typical Wiring to Addressable Loop Module

This wiring example is for wiring VESDA-E detectors to a typical third party Input/Output Loop module 3 inputs 1 output.

Note: These are example drawings. Refer to the appropriate product manual for the exact wiring details of the third party equipment.

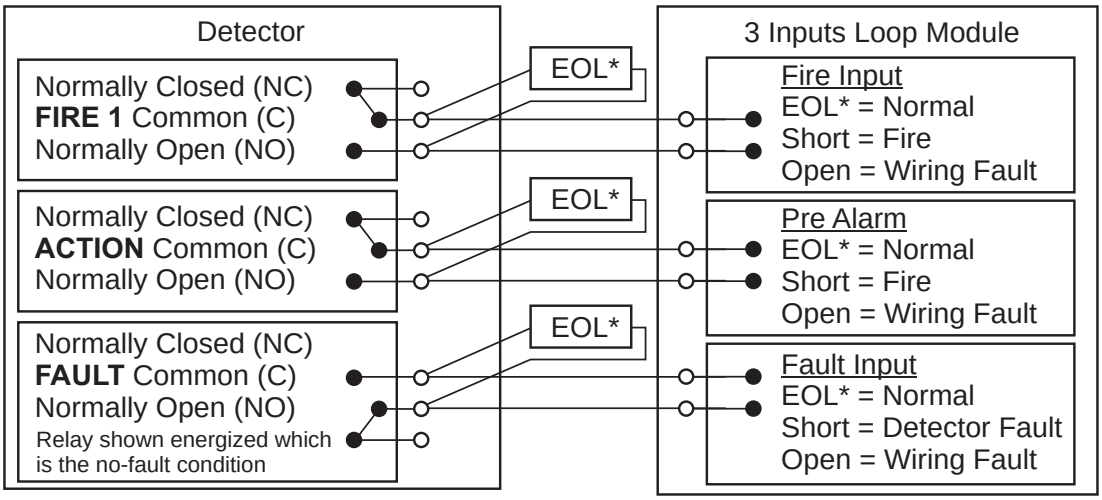

Figure 4-20: Input/Output Loop Module with EOL

Note: UL Listed addressable input modules can be connected to the VEA-040-A00-UL detector alarm relays, as shown in Figure 4-20, for primary reporting of a fire alarm. The relay outputs of the Relay StaX Module, as described in Appendix A.1, provide secondary address information, identifying which tubes of the associated detector generated the alarm condition. UL listed addressable input modules can be connected to the relay outputs of the Relay StaX Module as shown in Figure A-17 on page 115.

4.3.11 Typical Wiring for Monitored GPI for PSU Monitoring

The diagram below shows the correct way to configure power supply monitoring. It also shows where an End Of Line (EOL) resistor is correctly installed. Refer to Section 4.3.10 on page 36 for further information.

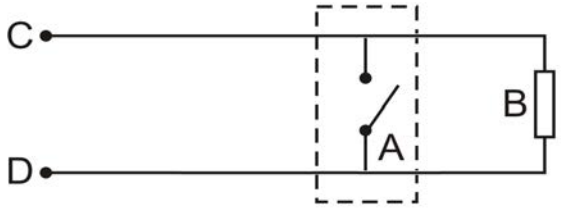

Legend	
A	External device (1 to N)
B	End of Line Resistor at device end of wiring
C	GPI Pin 1
D	GPI Pin 2

Figure 4-21: Power Supply Connection Diagram

4.3.12 System Wiring

A single VEA detector can support communications with single Local Relay StaX module. There are limitations for powering multiple units with a single power supply. The following connectivity guidelines must be adhered to:

Power

Connect from the EXP PWR connector in the detector to the PWR IN connector in the Local Relay StaX. Use 1.1 mm² (18 AWG) or larger wire diameter for power connections.

Data

Connect from the DATA connector in the detector to any DATA connector in the Relay StaX unit.

Example

- Detector with Local Relay StaX (Figure 4-22)

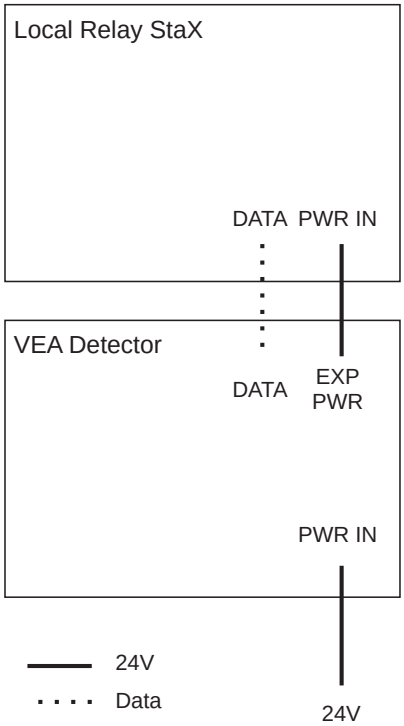

Figure 4-22: Single VEA detector and Local Relay StaX

Note: Refer to Appendix A for additional wiring information for the Local Relay StaX module.

4.3.13 Specify Backup Battery

In the event of a mains power supply disruption, the VEA-040-A00-UL detector runs on a backup battery located in the external power supply (the power supply must be compliant with local fire protection codes and standards). The size of the battery is determined by:

- local codes and standards
- the total power required by the system
- back up time required
- allowance for reduction in capacity with age
- expected temperature variations

Note: It is recommended that batteries be inspected and changed as per manufacturer's specifications or as per local codes and standards.

To facilitate the calculation of the backup battery size, refer to the VEA Battery Calculator (Document 21062), available from Xtralis Partner Extranet (www.xtralis.com).

4.4 Powering Up

After installing the detector it is necessary to power up the system. The detector initializes and performs self-testing for approximately 5 minutes.

The VEA-040-A00-UL detector does not have a power switch i.e it is an "always on" device which is activated by applying powered cabling to the power input terminal on the main board (Figure 4-16). This process must only be performed by Xtralis accredited personnel.

If the system fails to power up, check all power wires are secured to their terminals and that the polarity is correct. Ensure that the power supply voltage is in the required range, as indicated in Section 2.7.

On power up:

- The Power LED illuminates and the detector runs a series of self-diagnostic tests.
- If there is a fault, the Fault LED illuminates. To identify the fault, check the Active Event List for the detector using Xtralis VSC or iVESDA.
- The pump starts up and air may be felt flowing out of the exhaust port.

It is normal for the detector to display airflow faults immediately after the first power up and until the air flow normalization step is done. After normalization is completed, reset the detector by pressing the reset button on the front of the unit. This will unlatch the relays and turn off the Fault LED. Any remaining faults will cause the Fault LED to illuminate again. Proceed with the preliminary system check.

It is necessary to wait 5 minutes after power up before Normalization can be performed.

The detector will scan the 40 tubes for flow faults when Reset is performed. This flow scan can be canceled using the Stop Flow Scan command in Xtralis VSC. Refer to Section 5.4 for further information.

4.5 Installation Checklist

Site Name	
Address	
Detector Serial Number(s) and Date of Manufacture	
Name of Installer	
Signature	
Date	

Perform the following checks listed below to ensure that all the necessary items are completed before handing over to a commissioning engineer.

Installation Checks	**Done (Y/N)**
Ensure that the detector is undamaged when removed from the box.	
Ensure that the two smoke test port plugs (Figure 4-2) are in place and fully inserted.	
Where the optional mounting bracket is in use, is the detector securely locked onto it. Refer to Figure 4-9 Section 4.2.2 on page 25 for further information.	
The sampling tubes are firmly connected to the air inlet ports. Ensure that the tubes are NOT glued. Ensure that the tube ends are correctly cut (Figure 3-3).	
The un-used tube inlet ports are blocked with a blanking plug.	
Ensure that the two transit screws (Figure 4-5) have been removed.	
The power wires have been connected to the correct terminals on the detector.	
If required, the end of line resistor for the monitored GPI has been connected. Refer to Section 4.3.11 on page 36 for further information	
The alarm and fault relay output terminals of the detector have been connected to the fire panel.	
The adhesive tape has been removed from the exhaust port? Ensure that the exhaust tube (if fitted) is NOT glued.	
The protective film has been removed from the display.	
The sampling network is installed and checked as per the site plans.	

4.6 Preliminary System Check

A preliminary system check is required after installing the VEA-040-A00-UL detector, before it is commissioned for use.

To perform the preliminary system check:

- Power up the detector by connecting the power supply to the Power In terminal.
- Check that the display is functioning.
- Check that the pump is functioning by determining whether air is being expelled from the exhaust port.

This page is intentionally left blank.

5 Configuration

This chapter describes a number of configuration options, user functions and security features of the VEA-040-A00-UL detector that the installer and users must be familiar with. These include:

- defining connections and connecting to the detector
- security
- detector commands
- configuration options
- relay options
- GPI functions
- default settings

The VEA-040-A00-UL detector is initially configured using Xtralis VSC software installed on a PC directly connected to the USB port. It is necessary to connect to the detector in order to configure it. The procedures for defining connections is described in Section 5.1.1 below.

5.1 Communication between Xtralis VSC and the detector

In order to allow communication between Xtralis VSC and the detector, the following steps must be performed:

1. Define a USB Connection Profile and then connect to the detector. (See Sections 5.1.1, 5.1.2 and "Adding a USB Connection" below).
2. If using Ethernet or WiFi as a permanent connection method, then:
   - configure the respective parameters in the detector, including the authentication password.
   - create a connection profile for Ethernet or WiFi as required.
   - Connect to the detector.

USB is used for initial configuration, however it must not be used for permanent connection. Permanent connection for secondary monitoring must only be done with Ethernet or WiFi.

For example, the installer would connect directly to a VEA-040-A00-UL using the USB port with a laptop running Xtralis VSC in order to configure the detector to enable Ethernet or WiFi, the parameters of which could be unique for each installation. A connection profile would need to be defined for the temporary USB connection, and then for the permanent connection using VESDAnet, Ethernet or WiFi.

Note: Refer to the VESDA Communications Guide for further information.

5.1.1 Defining Connection Profiles in Xtralis VSC

There are multiple ways to connect to a VEA-040-A00-UL detector. Each connection method requires a range of information. This information is saved in a connection profile in the Xtralis VSC Connection Manager, which subsequently enables the user to quickly connect to the detector.

5.1.2 Connection Profile for a Detector

To define a connection to a VEA-040-A00-UL detector connected to the PC or laptop via USB, Ethernet or WiFi, follow this procedure:

1. In Xtralis VSC, select **Connection | Manager** from the menu system.
   The Connection Manager dialog is displayed (Figure 5-1).

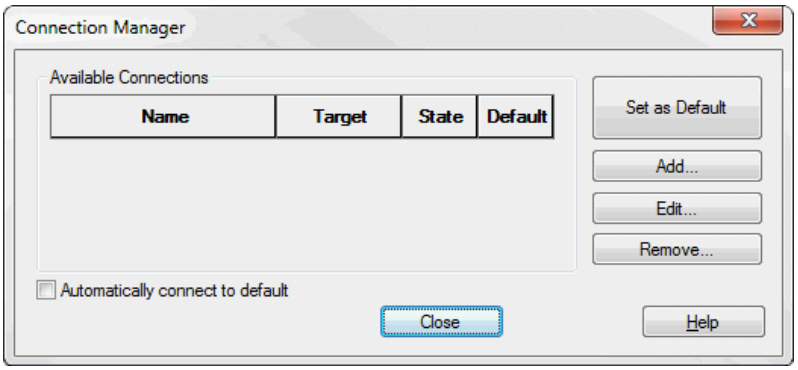

Figure 5-1: Connection Manager

2. Select **Add**.
   The Add Connection dialog is displayed (Figure 5-2).

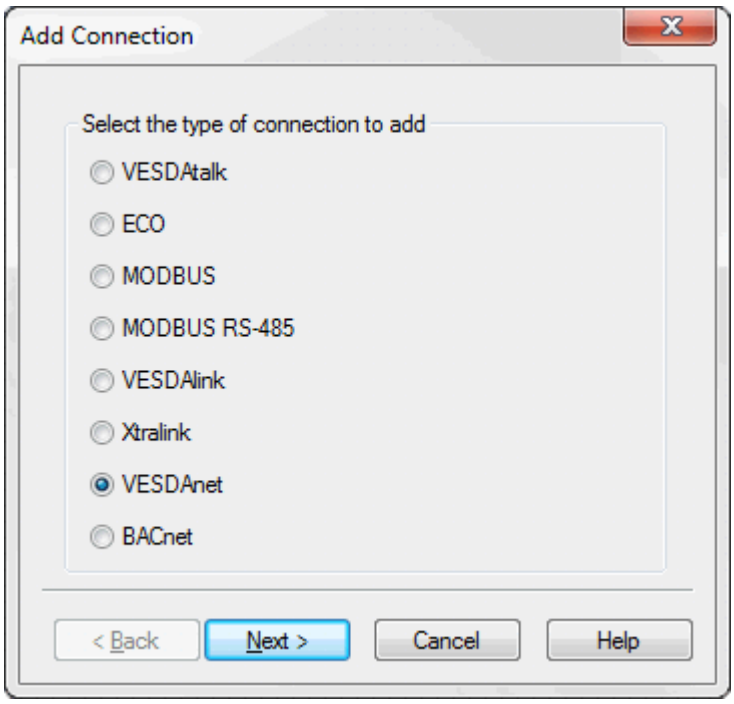

Figure 5-2: Add Connection

3. Select the VESDAnet connection option, then select **Next**.

Adding a USB Connection

1. Select **USB**, then select **Next** (Figure 5-3).

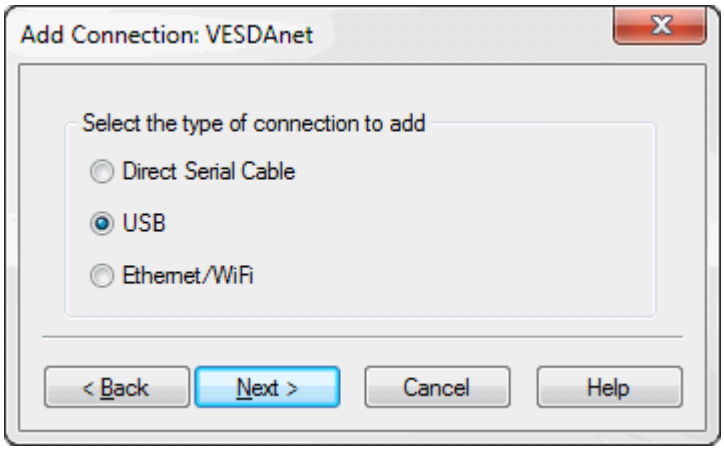

Figure 5-3: Select USB

2. Enter a unique name for the Connection or accept the pre-generated name, then select **Finish** (Figure 5-4).

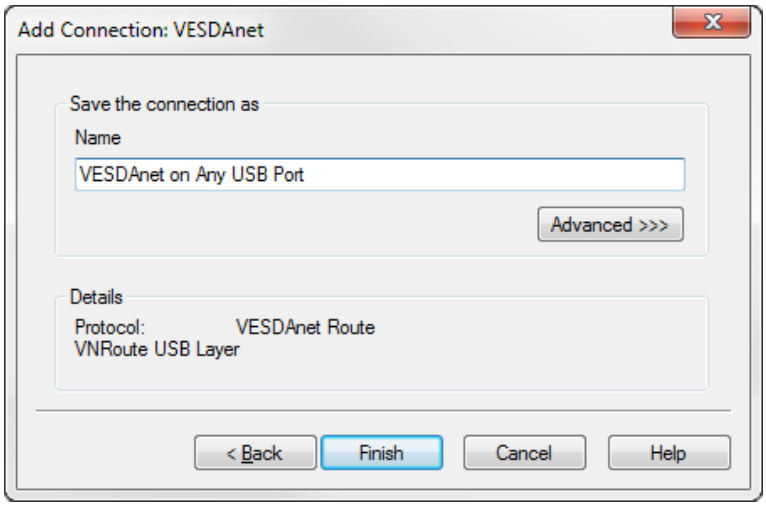

Figure 5-4: Enter a Connection Name

Adding an Ethernet or WiFi connection

1. Select **Ethernet / WiFi**, then select **Next** (Figure 5-5).

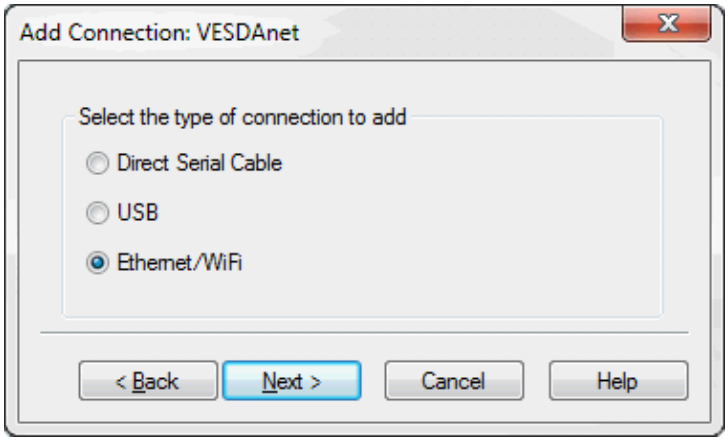

Figure 5-5: Select Ethernet

2. Enter the IP address of the detector. Enter the password that has been set for Ethernet and WiFi authentication. Select **Next** (Figure 5-6).

Note: The IP address and password of the detector is configured in the Ethernet or WiFi options section during initial setup with a USB connection. Refer to Section 5.5.3 on page 65 or 5.5.4 on page 66 for further information.

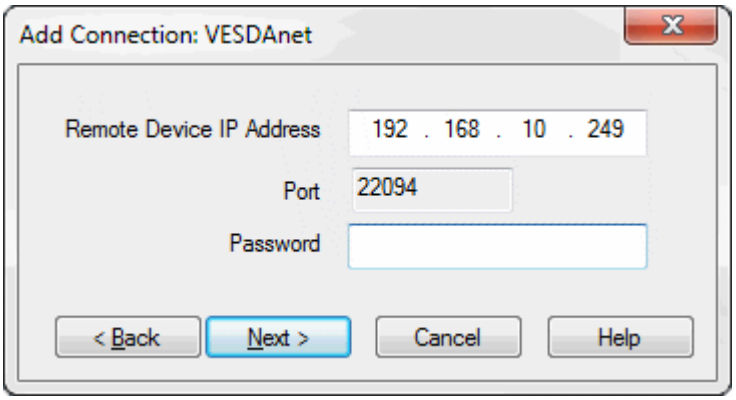

Figure 5-6: Enter IP Address

3. Enter a unique name for the Connection or accept the pre-generated name, then select **Finish** (Figure 5-7).

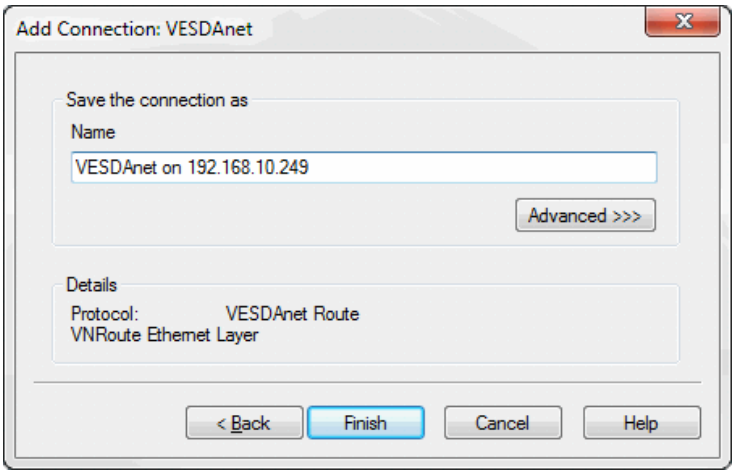

Figure 5-7: Enter a Connection Name

5.2 Connecting to the Detector

Once a Connection Profile has been defined, it is possible to connect to the VEA-040-A00-UL detector using the following methods:

5.2.1 Connecting to a detector via USB

Direct connection between the detector and the PC installed with Xtralis VSC can be made using a Type A to Type B USB interface lead.

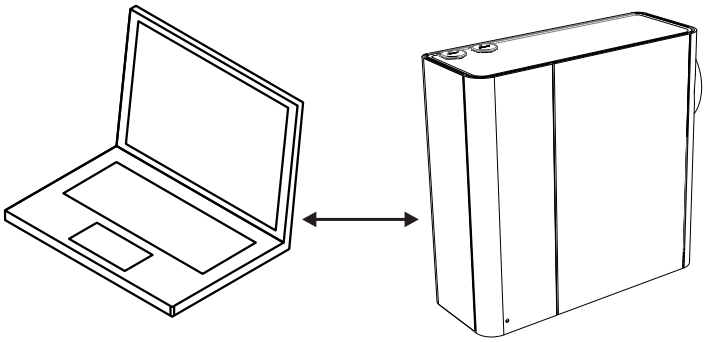

Figure 5-8: Connecting to a detector via USB

Connect to a detector using Xtralis VSC

1. If required, define a connection, as described in Section 5.1.2 on page 41.
2. Select **Connection > Connect and View**.
3. If the previously defined connection profile is set as the default connection, select OK, otherwise select Details, then select the required USB connection from the list of available connection profiles and select OK.

5.2.2 Connecting to a detector via Ethernet

Connection using Ethernet cabling between the detector and the PC installed with Xtralis VSC can be made using a router or switch (Figure 5-9), or directly between the two devices. Complex networks are beyond the scope of this document.

For a successful connection, Ethernet connectivity must be enabled within the detector, the detector must have an IP address, and an authentication password must be set. Configuration procedures for these requirements are detailed below.

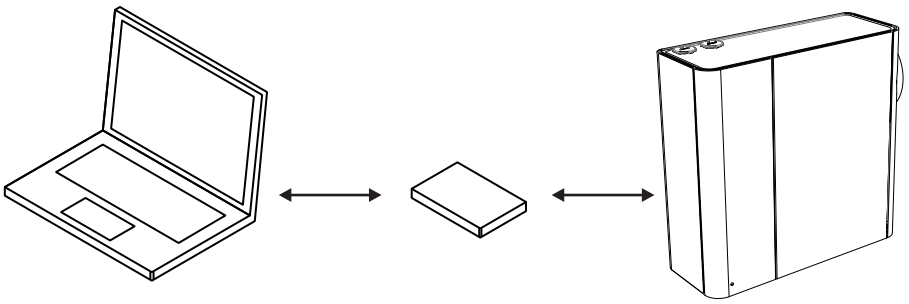

Figure 5-9: Connecting to a detector via Ethernet using a router or switch

Enabling Ethernet Connection

The Ethernet connection method only needs be configured once, and then edited if there is a change to any of the relevant building network connection parameters.

1. Physically connect the detector to the building network.
2. Configure the detector to use Ethernet.

- Connect to the detector using USB following the procedure described in Section 5.2.1.
- In the Ethernet tab for the detector:
  - For dynamic IP addresses, set **Automatically obtain IP Address** to on. Once it has been successfully allocated, record the IP Address for use in connection profiles. It can be found on the detector status screen.
  - For static IP addresses, set **Automatically obtain IP Address** to off and set the **IP Address**, **Subnet Mask** and **Default Gateway** to a valid address in the building network.
  - Set the detector authentication password. Refer to Section 5.3.1 on page 48 for further information.

Connect to a detector using Xtralis VSC

1. Using the normal building network connection process, connect the PC to the network.
2. Add an Ethernet / WiFi connection using Connection Manager in Xtralis VSC. Refer to Section 5.1.2 for further information.
3. Enter the IP address of the detector previously set when enabling Ethernet connections. Where the IP address is not known, it may be viewed on the detector status screen using a USB connection.
4. Enter the Authentication Password previously set when enabling Ethernet connections.
5. Select **Connection > Connect and View**.
6. If the previously defined connection profile is set as the default connection, select OK, otherwise select Details, then select the required Ethernet connection from the list of available connection profiles and select OK.

5.2.3 Connecting to a detector via WiFi

Connection using WiFi between the detector and the PC installed with Xtralis VSC can be made using a router or access point (Figure 5-10). The example below shows both devices joined to the same wireless network. Complex networks are beyond the scope of this document.

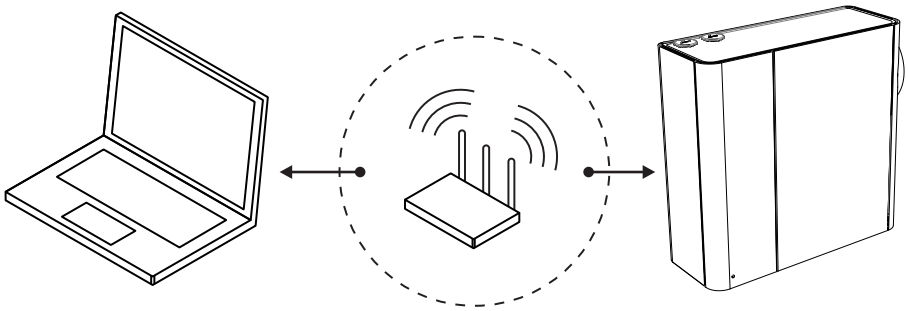

Figure 5-10: Connecting to a detector via WiFi using a router

Enabling WiFi Connection

The WiFi connection method only needs be configured once, and then edited if there is a change to any of the relevant building network connection parameters.

1. Connect to the detector using USB following the procedure described in Section 5.2.1.
2. In the WiFi tab for the detector:
   - For dynamic IP addresses, set **Automatically obtain IP Address** to on. Once it has been successfully allocated, record the IP Address for use in connection profiles. It can be found on the detector status screen.
   - For static IP addresses, set **Automatically obtain IP Address** to off, and set the the **IP Address**, **Subnet Mask** and **Default Gateway** to a valid address in the building network.
   - Set the SSID, security mode and WEP key or WPA pass phrase as required to connect to the building access point. Refer to Section 5.5.4 for further information.
   - Set the detector authentication password, using the Set Password button located in the General tab. Refer to Section 5.3.1 on page 48 for further information.

Connect to a detector using Xtralis VSC

1. Using the normal building network connection process, configure the PC to connect to the WiFi access point.

2. Add a Ethernet / WiFi connection profile using Connection Manager in Xtralis VSC. Refer to Section 5.1.2 for further information.
3. Enter the IP address of the detector previously set when enabling WiFi connections. Where the IP address is not known, it may be viewed on the detector status screen using a USB connection.
4. Enter the Authentication Password previously set when enabling WiFi connections.
5. Select **Connection > Connect and View**.
6. If the previously defined connection profile is set as the default connection, select OK, otherwise select Details, then select the required WiFi connection from the list of available connection profiles and select OK.

5.2.4 Connection to a detector via VESDAnet

A VEA-040-A00-UL that is part of a VESDAnet network can be accessed via another VESDA-E device acting as a gateway:

- the VEA-040-A00-UL must be physically connected to the VESDAnet, as described in Section 4.3.5.
- another VESDA-E detector can be used as a gateway to communicate between the PC with Xtralis VSC and any device connected to the VESDAnet.

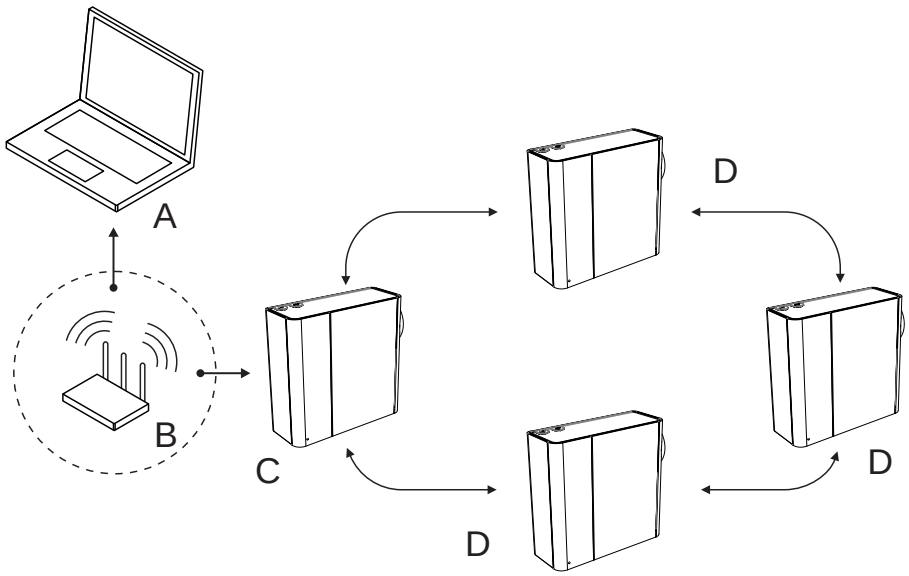

Legend	
A	PC or Laptop installed with Xtralis VSC
B	Router or access point
C	VEA-040-A00-UL used as a gateway to the VESDAnet
D	Other VESDA-E detectors on the VESDAnet with WiFi disabled.

Figure 5-11: Connection to a detector via another detector on VESDAnet using a WiFi connection

Alternatively it is possible to connect using a High Level Interface (HLI) connected between the PC or Laptop with Xtralis VSC and the VESDAnet Socket in one of the devices on the VESDAnet.

Notes:

- The VEA-040-A00-UL detector acts as a gateway on VESDAnet and allows a PC connected to the Ethernet, USB or WiFi connections to communicate with the gateway VEA-040-A00-UL itself and any other device on VESDAnet.
- Refer to the VESDA Communications Guide for detailed information on VESDAnet.

Define a new Connection Profile (USB, Ethernet or WiFi connection between the PC and the detector which is acting as a gateway)

1. For VESDA-E detectors, follow the steps in Section 5.1.2 and add a USB, Ethernet or WiFi connection.

Access the VEA-040-A00-UL

1. Connect to the gateway device in Xtralis VSC using Connection Manager. The software then automatically polls the VESDAnet for devices and lists them in the VESDAnet device list.

5.3 Security

The VEA-040-A00-UL has two levels of protection against unauthorized access. For connection via Ethernet or WiFi, a password of at least 8 characters must be used. After connection, a four digit PIN is used to control the access level.

5.3.1 WiFi and Ethernet Authentication

A password is used to authenticate access over Ethernet or WiFi connection when using Xtralis VSC or iVESDA.

The password is set in the General options tab for the VEA-040-A00-UL detector, and applies to both Ethernet and WiFi access. Refer to Section 5.5.3 on page 65 and Section 5.5.4 on page 66 for further information. When creating connection profiles in Xtralis VSC or iVESDA, the same password must be entered. Refer to Section 5.1.2 on page 41 for further information.

The password must conform to the following rules:

- 8 or more characters.
- Contains one or more numeric characters.
- Contains both upper case and lower case characters.

5.3.2 Access Control

When accessing the VEA-040-A00-UL detector via Xtralis VSC or iVESDA, user functionality is initially limited. For additional privileges, the user must log in to the detector using an 4 digit numeric PIN code. In Xtralis VSC, select Logon from the Connection menu and enter the PIN.

Table 5-1: User Access Levels

User Level	Access Level	Functional Authorization
USR	Low	This is the USER or the OPERATOR level. The user can view the event log and change the date and time. They can also perform selected zone control functions.
ADM	High	At the ADMINISTRATOR level access is available to most functions. These include setting alarm thresholds, normalizing air flows, reset filter, and defining the relay configuration.
DST	Absolute	The DISTRIBUTOR level allows unlimited access to all the system commands and parameters.

The default PIN for each level of user is set at the factory. The distributor has access to the PINs for each level. PIN numbers are disclosed to authorized personnel attending accredited training courses.

After logging in the user has the option to change the default PIN. To guard against unauthorized access, if someone enters an incorrect PIN number three times they will not be allowed another attempt for ten minutes.

5.4 Commands

The following commands are able to be issued to the detector. As indicated below in Table 5-2, a small number of basic commands can be executed from the detector via buttons, while the full range of commands can be executed using the Xtralis VSC or iVESDA software.

Table 5-2: Detector Commands

Command	Description	Execute From	
		A button on the Detector	Xtralis VSC or iVESDA Software
Disable (Isolate)	The Disable command disables all the output relays associated with the detector. The pump remains active.	✔	✔
Enable	The Enable command enables all of the output relays associated with the detector.	✔	✔
Go to Standby	The Go to Standby command sets the detector to Standby mode. See Section 7.1 on page 81 for a description of Standby mode. Standby requires firmware version 5.30 or higher.		✔
End Standby	The End Standby command is available when the detector is in Standby mode. The End Standby command causes the detector to exit Standby mode.		✔
Reset	The Reset command unlatches all latched alarms and faults, and returns relays to their normal state. Clears the active event list. Reset does not enable a disabled detector. To assist in determining the location of a fire, when the system is reset and if the system is in Pre-Alarm, the detector will initiate a smoke scan of all sampling locations. When the system is reset and there is no alarm condition, but there are one or more flow faults the detector will perform a flow scan to ensure that there are no remaining flow fault conditions. Flow scan progress can be observed using the detailed status screen of Xtralis VSC (refer to Section 8.1.1 on page 101) and, if required, the flow scan can be canceled using Xtralis VSC.	✔	✔

Table 5-2: Detector Commands (continued...)

Command	Description	Execute From	
		A button on the Detector	Xtralis VSC or iVESDA Software
Start Normalize Air Flow	Starts the air flow normalization process for the selected detector. The normalization process determines the reference flow rate. Normalization should be performed after changing pipe or monitoring pump settings. The process takes approximately 30 minutes. The detector must have been powered up for 5 minutes before the Normalization process can be initiated. The detector can be in normal or disabled mode. The pump remains on throughout the normalization process and no fault is reported unless the process fails to successfully complete. The normalizing status may be observed on the "detailed status" tab in the Xtralis VSC software. To normalize the detector using the internal AutoConfig button, press and hold the button until the AutoConfig LED illuminates, then release the button. To cancel the normalization process, press and hold the button for 5 seconds. The LED will turn off.	✔	✔
Start Flow Scan	Perform a local flow test to confirm correct airflow within Sampling Tubes. The operation is manually initiated from within the Xtralis VSC software. Prior to performing the Flow Scan test, wait for the system to indicate the Monitoring State on the Xtralis VSC detail status screen.		✔
Stop Flow Scan	End an in-progress flow scan test.		✔

Table 5-2: Detector Commands (continued...)

Command	Description	Execute From	
		A button on the Detector	Xtralis VSC or iVESDA Software
Start Local Smoke Test	Perform a local smoke test to confirm correct operation of detector internal components. The test is manually initiated from within the Xtralis VSC software. **Note:** The detector will not perform normal smoke detection from the sampling tubes while this test is in progress, and Fault 826 is generated. To test, spray smoke into test ports with red plugs, located on the left side of the detector, and initiate the Start Local Smoke Test command. • To open the smoke test ports, push the black release button around the red plug with a screwdriver while pulling the plug out. **Note:** Ensure that the plugs are replaced when testing is complete. While the Local Smoke Test is running: • the Scanning State indicator on the Detail Status tab will show that the test is being performed. • the Tube Start / End indicator on the Detail Status tab will show "Home". Execute the Stop Local Smoke Test command to complete the test.		✔
Stop Local Smoke Test	End an in-progress local smoke test. Fault 826 is cleared.		✔
Start Leak Test	Test for air leaks within the detector. The test is performed automatically every 24 hours at a specified time, and can also be manually initiated from within the Xtralis VSC software. Fault 829 will be generated if leaks are detected.		✔
Stop Leak Test	End an in-progress leak test.		✔

Table 5-2: Detector Commands (continued…)

Command	Description	Execute From	
		A button on the Detector	Xtralis VSC or iVESDA Software
Sampling Point Test	Test for the correct presence of a sampling point at the end of the tube. The test is performed automatically every 24 hours at a specified time, and can also be manually initiated from within the Xtralis VSC software. If the Sampling Point is present, no fault will be generated. Fault 824 will be generated if no Sampling Point is fitted or the tube is fractured. While the Sampling Point Test is running, the Scanning State indicator on the Detail Status tab will show that the test is being performed. **Procedure** • Initiate the Sampling Point Test command from the Device menu. • Select the tubes to be tested by editing the check boxes in the Enable column (Figure 5-14). • Select Start. • End the test early by selecting Stop. 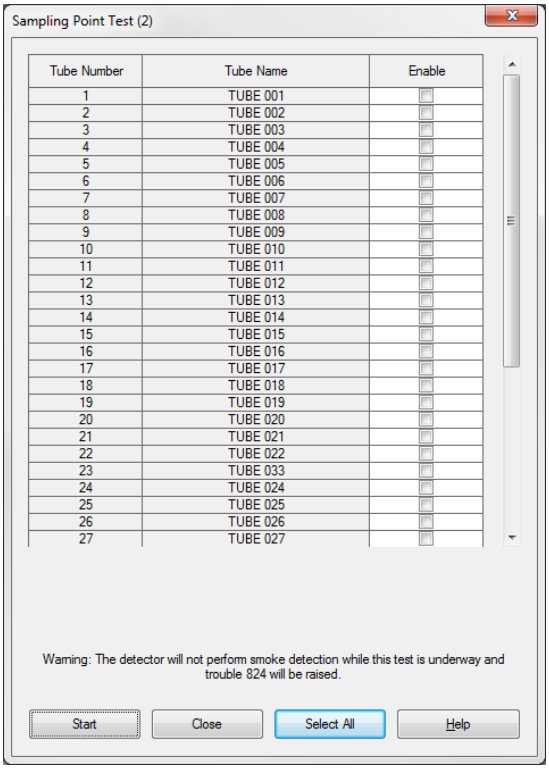 Figure 5-12: Sampling Point Test		✔

Table 5-2: Detector Commands (continued...)

Command	Description	Execute From	
		A button on the Detector	Xtralis VSC or iVESDA Software
Sampling Point Cleaning	Clean the sampling points. The operation is performed automatically at specified intervals and can also be manually initiated from within the Xtralis VSC software. While the Sampling Point Cleaning function is running: • Fault 825 is generated. • the Scanning State indicator on the Detail Status tab will show that the operation is being performed. • the Tube Start / End indicator on the Detail Status tab will show which tubes are being cleaned. • the Percentage completed indicator on the Detail Status tab will show progress of the operation. **Procedure** • Initiate the Sampling Point Cleaning command from the Device menu. • Select the tubes to be cleared by editing the check boxes in the Enable column (Figure 5-14). • Select Start. • End the procedure early by selecting Stop. 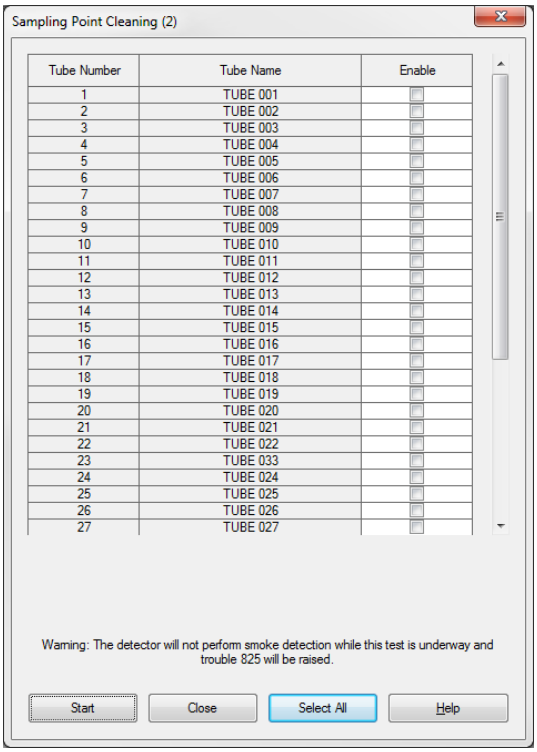 Figure 5-13: Sampling Point Cleaning		✔
Rebuild Zone List	Rebuild the list of display modules that are assigned to each detector on the VESDAnet.		✔

Table 5-2: Detector Commands (continued...)

Command	Description	Execute From	
		A button on the Detector	Xtralis VSC or iVESDA Software
Start Major Fault Test	Generate a major fault on the detector for 2 minutes.		✔
Start Minor Fault Test	Generate a minor fault on the detector for 2 minutes.		✔
Start Alarm Test	Simulate full scale smoke level and initiates all alarm activity. Alarm relays will energize unless the detector is disabled. **Procedure** • Initiate the Start Alarm Test command from the Device menu. • Select the tubes to be tested by editing the check boxes in the Enable column (Figure 5-14). • Set the test duration (default 30 seconds). • Select Start. • End the test early by selecting Stop. 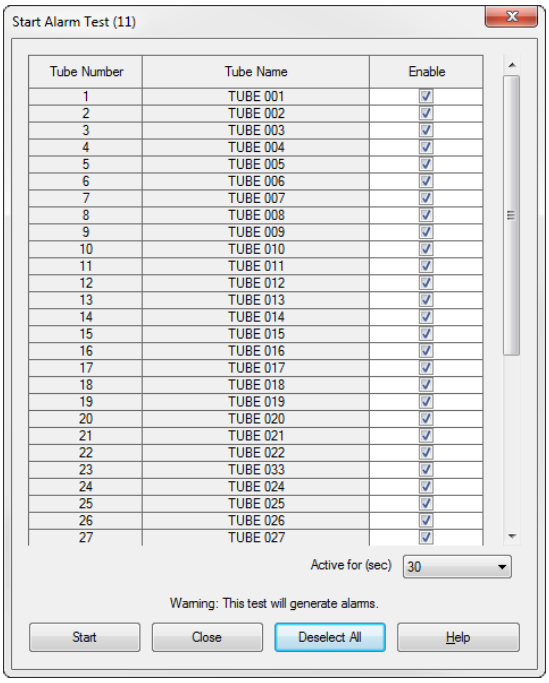 Figure 5-14: Start Alarm Test		✔
Start Relay Test	Test the available relays by activating and deactivating as required.		✔
Start LED Test	Test each LED by cycling through all LEDs on the detector display panel.		✔
Return to Factory Defaults	Restores the configuration of the detector to the initial factory default values.		✔
Set System Date and Time	Set the detector date and time.		✔

Table 5-2: Detector Commands (continued...)

Command	Description	Execute From	
		A button on the Detector	Xtralis VSC or iVESDA Software
Walk Test	Refer to Section 5.4.2 on page 59 for further information.		✔

Table 5-2: Detector Commands (continued…)

Command	Description	Execute From	
		A button on the Detector	Xtralis VSC or iVESDA Software
Tube Flow Scan	The Tube Flow Scan function allows the user to measure the air flow rate for a selected set of tubes. The Flow rate can be viewed in the event log. To start Tube Flow Scan select Tube Flow Scan from the Device Menu. Tick the tubes for which the flow scan is to be done and select Start. “Testing In Progress” will be displayed. The detector will move the rotary valve to each tube and measure the flow rate. To stop the flow scan select “Stop”. The event log will have an event showing the flow rate for each selected tube. Tube Flow Scan requires firmware version 5.30 or higher. 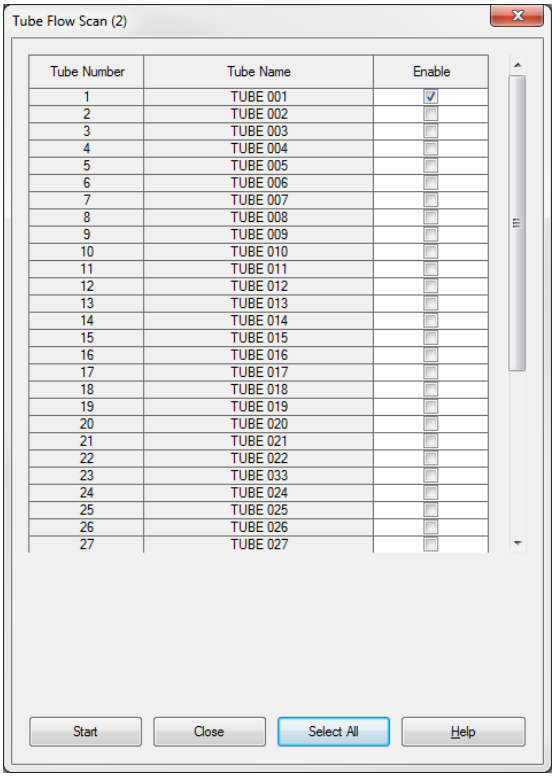		✔

Table 5-2: Detector Commands (continued...)

Command	Description	Execute From	
		A button on the Detector	Xtralis VSC or iVESDA Software
	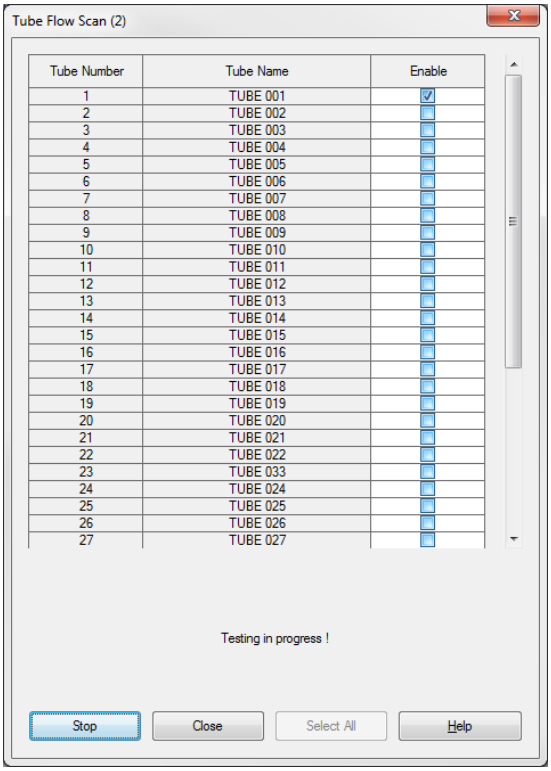		

5.4.1 Air Flow Set Up

Initial Flow Scan

Once the system is set up, check that the air sampling tubes are correctly inserted into the detector and that unused air sampling ports are securely blocked with blanking plugs.

Execute a flow scan as described in Table 5-2, 'Start Flow Scan' which may take up to 30 minutes to complete. When complete, check the EVENT LOG for tube flow results. Flows should be in the range 0.3 to 0.9 l/m.

Notes:

- Ports with blanking plugs (i.e. not used) should have very little flow so they should read less than 0.1 l/m.
- Ports that have tubes connected should have flows in the range 0.3 to 0.9 l/m. If flows are outside this range check for tube blockages or connection air leaks.

Debugging Flow

If there are problems with a port or tube which have been identified and fixed, check that they are operating in the required flow range by performing 'Tube Flow Scan' as shown in Table 1-1. This allows selection and checking of a small number of tubes to save time.

Normalise

Once all tube flows are within the expected range, execute a flow normalise command, 'Start Normalize Air Flow' as shown in 5.4.

This will take up to 30 minutes to complete. When complete, the following table will appear on the Xtralis VSC screen.

Normalization (0) - 448006

Detector

Tube Number	Tube Name	Flow Rate for Last Normalization	Tube Number	Tube Name	Flow Rate for Last Normalization
1	TUBE 001	0.441	2	TUBE 002	0.485
3	TUBE 003	0.410	4	TUBE 004	0.468
5	TUBE 005	0.440	6	TUBE 006	0.482
7	TUBE 007	0.407	8	TUBE 008	0.472
9	TUBE 009	0.441	10	TUBE 010	0.487
11	TUBE 011	0.411	12	TUBE 012	0.471
13	TUBE 013	0.436	14	TUBE 014	0.482
15	TUBE 015	0.410	16	TUBE 016	0.472
17	TUBE 017	0.444	18	TUBE 018	0.483
19	TUBE 019	0.411	20	TUBE 020	0.475
21	TUBE 021	0.437	22	TUBE 022	0.481
23	TUBE 033	0.405	24	TUBE 024	0.471
25	TUBE 025	0.435	26	TUBE 026	0.479
27	TUBE 027	0.402	28	TUBE 028	0.470
29	TUBE 029	0.431	30	TUBE 030	0.480
31	TUBE 031	0.401	32	TUBE 032	0.469
33	TUBE 033	0.430	34	TUBE 034	0.479
35	TUBE 035	0.404	36	TUBE 036	0.467
37	TUBE 037	0.430	38	TUBE 038	0.468
39	TUBE 039	0.400	40	TUBE 040	0.466
Home	Ch 1 flow	6.697	Home	Ch 2 flow	6.536

Normalize | Abort Normalization | Report | Close | Help

This shows the flow through all ports of the detector at the completion of normalization. The table above highlights the highest and lowest flows in each of the two detection channels. The ratio of the lowest to highest value should be no more than 0.6.

The 'Report' button will produce a text file showing all the normalization results which may be saved and printed as evidence of successful commissioning.

5.4.2 Walk Test Command

The Walk Test function allows the user to quickly perform a smoke test for a selected series of tubes.

Using Walk Test to perform a smoke test on a number of tubes is faster than using the detector's normal operating mode. This is because in Walk Test the detector moves the rotary valve to the tube to be tested and waits for the user to generate smoke. In the normal operating mode the detector first detects smoke with the rotary valve in the position in which air is supplied from all tubes. The system then scans to find which tube has smoke.

The Walk test function is controlled by Xtralis VSC. The user can set up the order of tubes to walk test in Xtralis VSC, save this list to the detector configuration and print the list to a text file (for reference while doing the Walk Test).

The detector signals Walk Test status in real time on Xtralis VSC and to the Fire Alarm Control Panel using the Fire 1 relay, a relay configured for Walk Test (if configured, refer to Section 5.5.10 on page 74 for further information) and the appropriate VER-A40-40-STX module relays if connected.

The detector generates fault 831 while the Walk Test function is active. The detector automatically drops out of Walk Test mode after a configurable period of no smoke activity.

The user can stop/start Walk Test midway through the Walk Test sequence. Also the user can start the Walk Test at a chosen tube.

The system generates a report using Xtralis VSC showing which tubes were tested. The report shows the time of the test and the pass status for each tube. The order of the report is the order of testing of tubes.

The user can disconnect Xtralis VSC while the Walk Test is being run and re-display the Walk Test status when they re-connect.

Walk test requires firmware version 5.30 or higher.

Start Walk Test

Before starting Walk Test first configure the set of tubes to be tested. See Section 5.5.12 on page 76 for further information.

To start the Walk Test, select the Walk Test command using the Device menu.

Walk Test does not start if:

- Airflow Normalisation, Flow Scan or Sampling Point Cleaning is in operation.
- The detector has an Alert or higher alarm level.
- Local Smoke Test is running.

The following screen will appear. This screen shows the Walk Test Status. Select the **Start** button at bottom left to start the Walk Test.

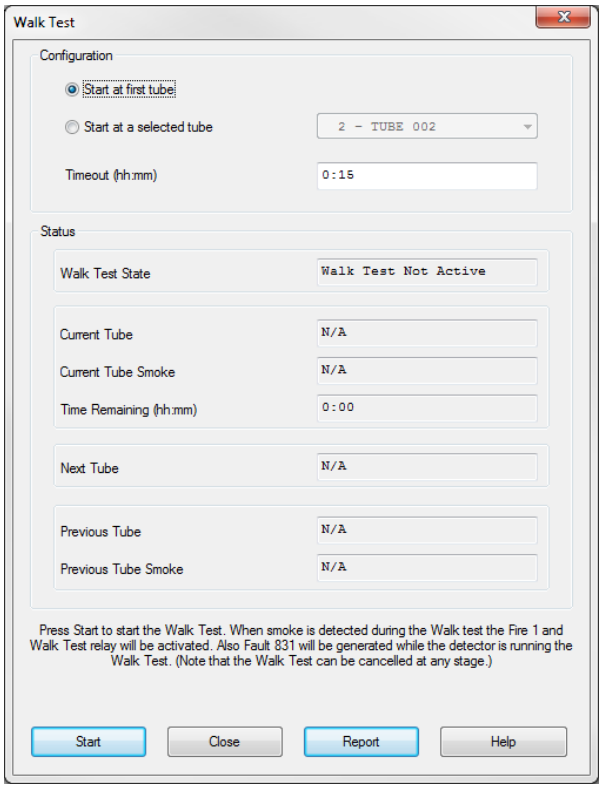

The detector will then update the Walk Test Status screen to state that the Walk Test is active and will also show the current tube being tested. This example shows the current tube as "Tube 002".

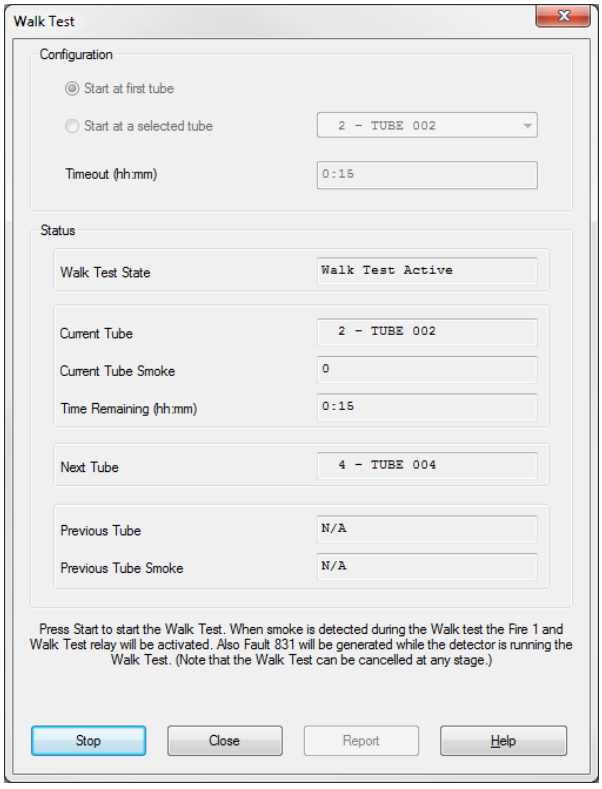

The Xtralis VSC Detail status screen can also be used to see the Walk Test status. This example shows tube 2 being tested.

Alarm Status | Summary Status | Detail Status | Version Info

Field	Value
Network Name	VEA
Location	VEA
Device Status	Enabled
Trouble Count	5
Active Alarm Status	No Alarms
Value	0
Current Sensitivity	Enhanced
Print Flow and Pressure	Off
Air Flow Normalizing	Off
Scanning State	Walk Test
Tube Start / End	Tube:2
Percentage Completed	5.0 %
Flow - Chamber 1	0.00 %
Flow - Chamber 2	0.00 %
Sequence Number	8893
Standby	
Alert (Current)	25
Action (Current)	63
Fire1 (Current)	100
Fire2 (Current)	200

Generate smoke for the current tube.

The detector will then do the following:

- The system will briefly show an alarm event on the VSC Active Event List.
- The relay configured to signal Walk Test will be turned on.
- The Walk Test Status screen will show the next tube to be tested.

Stop Walk Test

Walk test will stop when either:

- All holes have been tested.
- Stop is selected through the Walk Test Status screen.
- No smoke is supplied to the selected tube for more than the “Default Timeout“ period.

Checking The Walk Test

You can use the Walk Test report or the detector's Event log to determine that each tube has been tested.

Generate Walk Test Report

To generate a report showing which tubes were successfully tested, click the **Report** button on the Walk Test Status screen. (The report feature is only available after Walk test is stopped.)

A report will be generated in a text file. See example below:

```
Walk Test Started at Hole # 2 TUBE 002 19-04-2016 14:01:16

Holes Tested:

14:06:57 Hole # 2 TUBE 002

14:08:29 Hole # 4 TUBE 004

14:09:43 Hole # 6 TUBE 006

14:09:58 Hole # 8 TUBE 008

Walk Test Stopped/Timeout 19-04-2016 14:10:00
```

Event log

The event log will have an event for for the start and end of Walk test and for each tube tested.

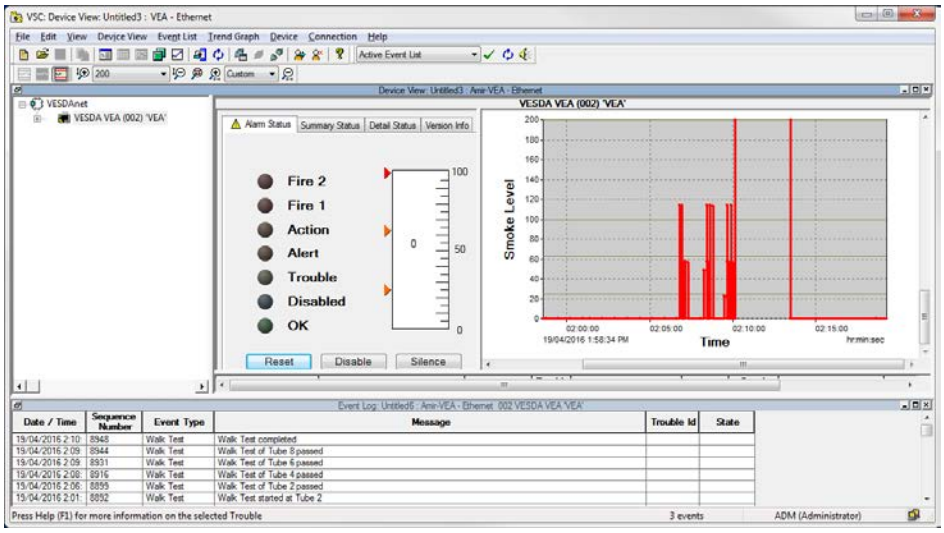

Note: The Walk Test Status screen can be closed and then re-opened via the Device menu at any time during Walk test without affecting the progress of the Walk Test.

5.5 Configuration Options

The VEA detector can be configured using the Xtralis VSC software.

The following sections describe the configuration options available in Xtralis VSC.

5.5.1 General Options

General options include some basic identification information for the detector.

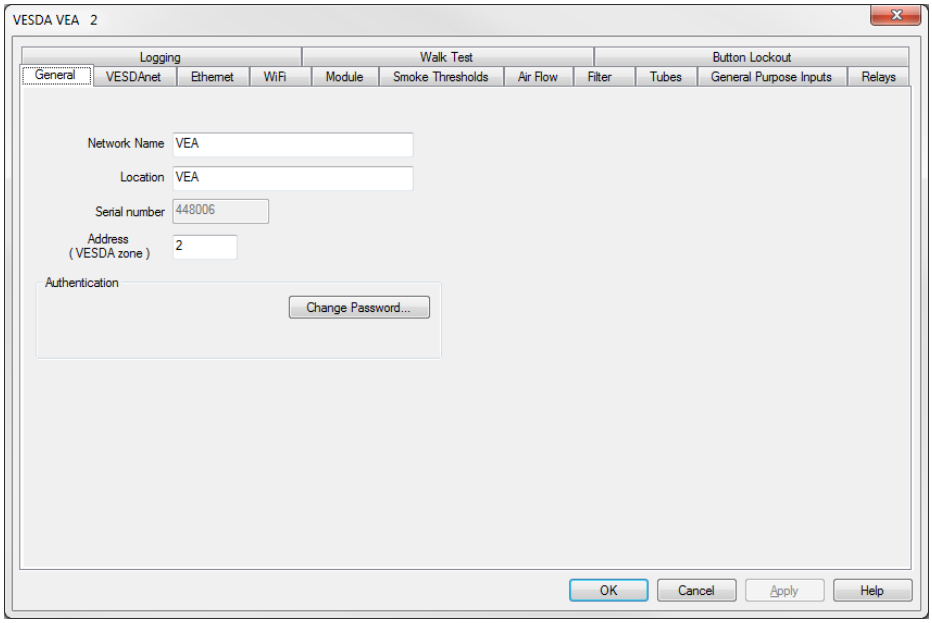

Figure 5-15: General Options

The General configuration options are as follows:

- **Network Name:** The name of the VESDAnet network. (The user can leave this blank if desired.).
- **Location:** A description of the physical location of the detector. This name will appear on Xtralis VSC and on the LCD display of the A10 model detector.
- **Serial Number:** The serial number of the device. This is factory set and cannot be changed.
- **VESDA Zone:** The unique zone number used to link this detector and remote display/relay devices or remote relay which output alarm and trouble status for this detector to the Fire Alarm Control Panel.

Authentication

- **Change Password:** Set the password used to authenticate Ethernet and WiFi access. Refer to Section 5.3.1 on page 48 for further information.

5.5.2 VESDAnet Options

VESDAnet options provide the ability to control network data transmission behaviour for VESDAnet connections.

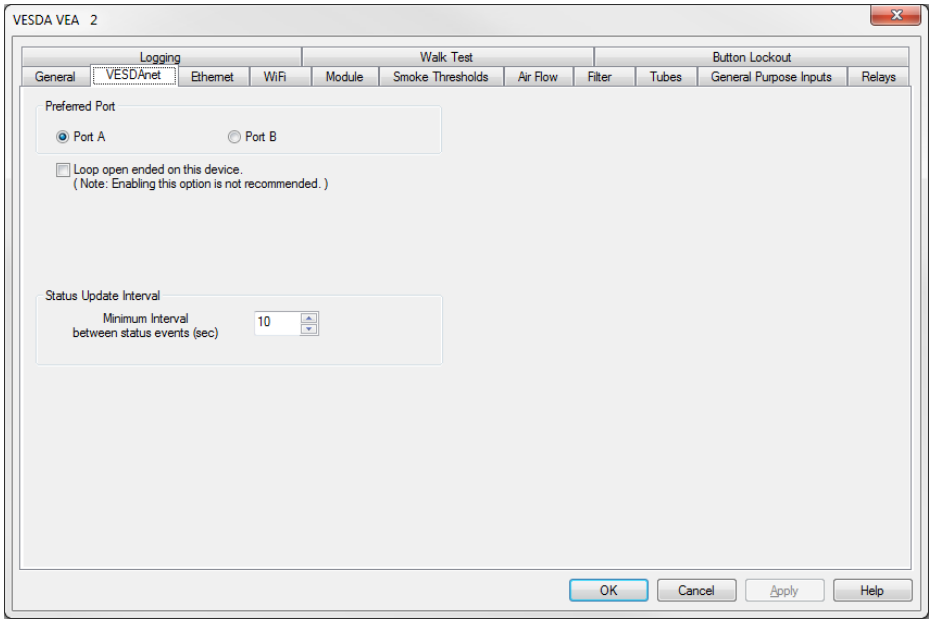

Figure 5-16: VESDAnet Communications Options

The Communications configuration options are as follows:

- **Preferred Port:** The preferred VESDAnet port to be used to transmit network data from this device. The non-preferred port is used if for some reason transmissions on the preferred port fail. For best performance in large networks, this setting should be randomly distributed between connected devices.
- **Loop Open Ended on This Device:** This should be checked if the network has been wired so either VESDAnet port A or VESDAnet B is not connected on this detector. (Xtralis recommends that VESDAnet ports A and B are always connected so this option should normally not be checked.).
- **Status Update Interval:** The minimum time interval between status events for the selected detector within its zone.

5.5.3 Ethernet Options

The Ethernet options provide the ability to configure the detector to join an existing wired Ethernet network using the normal building network connection process or be directly connected to a PC or laptop.

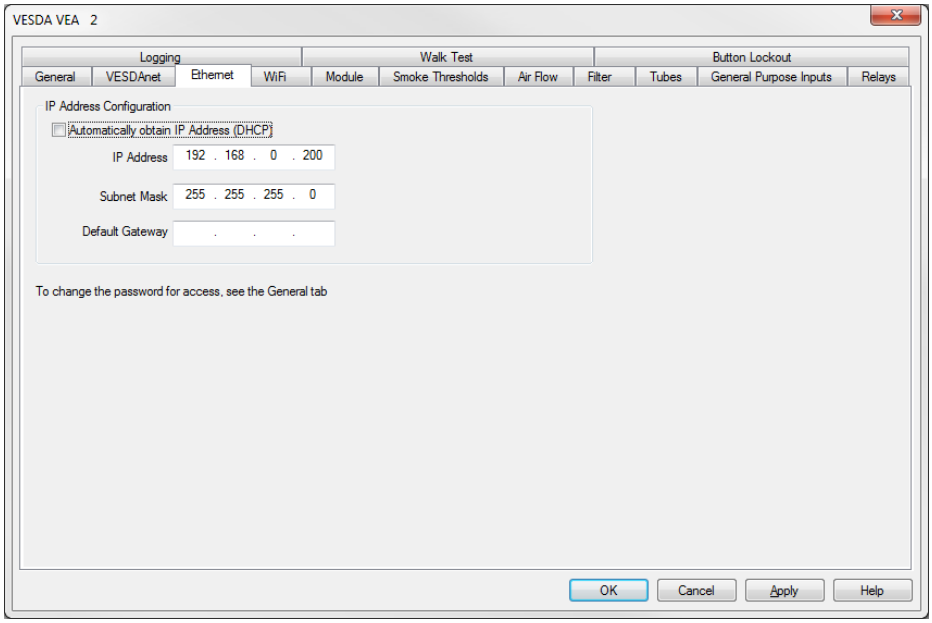

Figure 5-17: Ethernet Options

The Ethernet configuration options are as follows:

Dynamic IP Address Configuration

- **Automatically obtain IP Address:** Controls whether the VEA-040-A00-UL uses a static IP address or automatically obtains an address from a DHCP server available on the building network. If this option is selected, the IP address, Subnet Mask and Default Gateway fields are disabled. Once the IP address has been successfully obtained by the detector, it is displayed on the detector detail status screen.

Static IP Address Configuration

- **IP Address:** IPV4 static address. This address must be used when creating a connection profile for the detector in Xtralis VSC.
  - The default IP address is 192.168.0.200. This allows direct connection between a PC or Laptop and the VEA-040-A00-UL using a standard Ethernet lead.
  - Prior to connecting the detector to a router or other gateway device, the default address must be changed to an address in the range used by the router. This can be done by connecting to the detector using the USB port.
- **Subnet Mask:** The subnet mask for the network.
- **Default Gateway:** The IP address of the router or other gateway device that is servicing the network.

5.5.4 WiFi Options

The WiFi options provide the ability to configure the detector to join an existing WiFi network using the normal building network connection process.

After the WiFi parameters have been entered and the user selects Apply or OK, the detector will connect to the access point and remain connected while the access point is available. The WiFi LED inside the detector is continuously lit while the detector is connected to the access point, and is turned off if the detector is not connected to the access point.

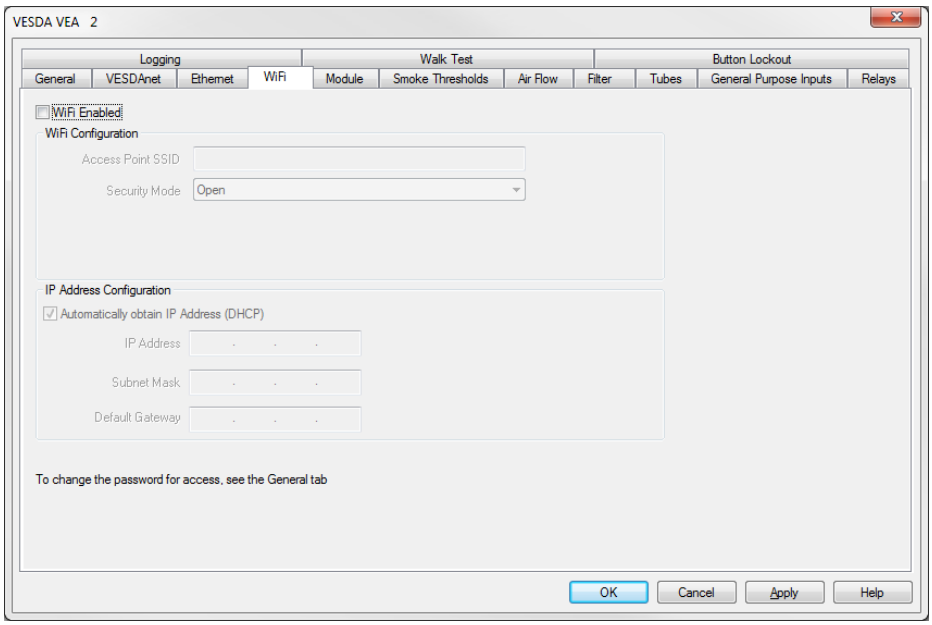

Figure 5-18: WiFi options

WiFi Network Connection Parameters

The following parameters are required to join the detector with an existing WiFi network:

- **WiFi Enabled:** Controls whether detector attempts to use WiFi and connect to an access point.
- **Access Point SSID:** Set by installer to suit building access point.
- **Security mode:** Set by installer to suit building access point
- **Key:** WPA or WEP Key required to join the VEA-040-A00-UL to the building network. This field is disabled if the Security Mode is set to Open.

WiFi IP Configuration Parameters

The following parameters allow setting of a dynamic or static IP address for the VEA-040-A00-UL on the WiFi network:

Dynamic IP Address Configuration

- **Automatically obtain IP Address:** Controls whether the VEA-040-A00-UL uses a static IP address or automatically obtains an address from a DHCP server. If this option is selected, the IP address, Subnet Mask and Default Gateway fields are disabled. When the detector is joined to the network, the IP address that has been allocated to the detector by the DHCP server can be viewed on the detector status screen in Xtralis VSC or iVESDA by using a USB connection.

Static IP Address Configuration

- **IP Address:** IPV4 static address
- **Subnet Mask:** Subnet mask for static address
- **Default Gateway:** Gateway for static address

5.5.5 Module Options

The module options screen provides the mechanism to configure:

- optional Local Relay StaX expected to be connected to the detector
- the number of tubes in use
- the tube length
- the use of sampling points

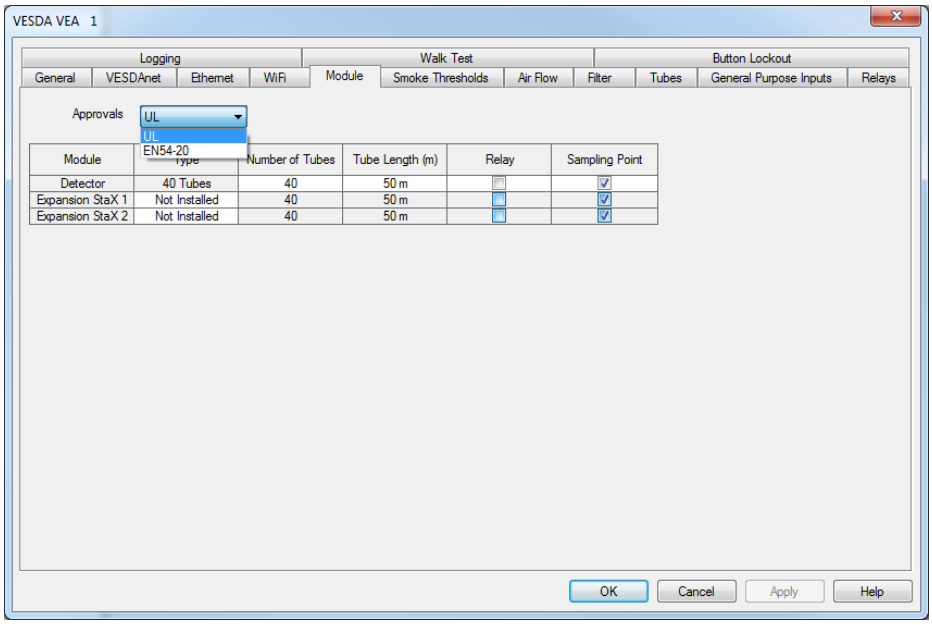

Figure 5-19: Module Options

Warning: Expansion Stax are not supported on VEA.

The options are as follows:

- **Approvals:** Set to “EN54-20” if the detector is installed on a site subject to EN54-20 approval. Set to “UL” if the detector is installed on a site subject to UL approval.
- **Type:** Always use "Not Installed".
- **Number of Tubes:** Set to configure the number of tubes connected to the detector. Note that the detector will generate a fault if the number of tubes configured does not equal the actual number of tubes detected when an airflow scan is performed.
- **Relay:** Tick to indicate that a Local Relay StaX is to be used with the detector , do not tick for the Expansion StaX.
- **Tube Length:** The length of each tube.
- **Sampling Point:** Tick if VEA sampling points are connected to each tube.

5.5.6 Smoke Threshold Options

Smoke Threshold options provide the mechanism to set the smoke obscuration trigger point for each alarm level, and the ability to assign day or night thresholds to cater for different levels of activity in the protected area during these times.

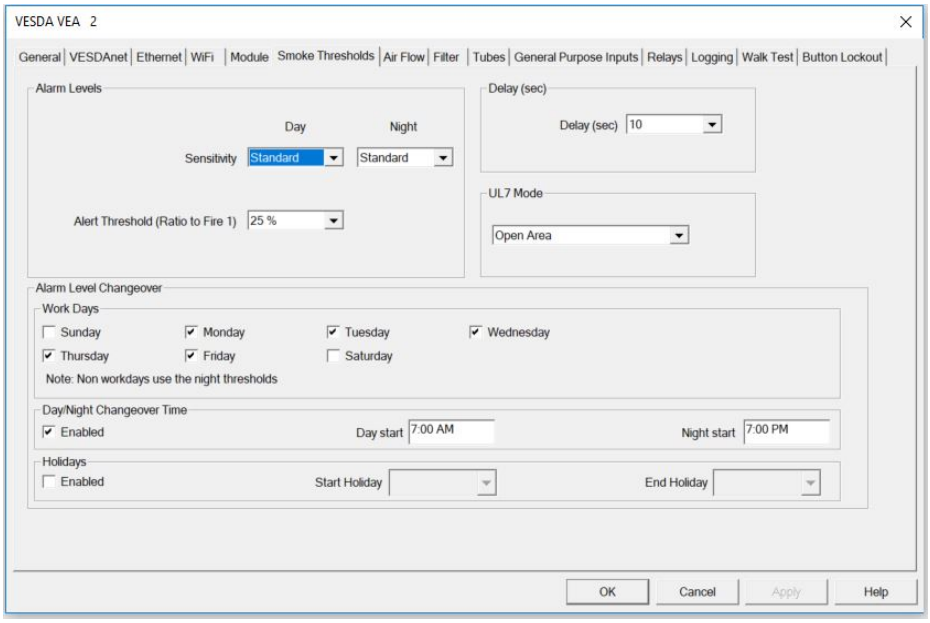

Figure 5-20: Smoke Threshold Options

The Smoke Threshold configuration options are as follows:

- **Alarm Levels:** The settings smoke thresholds. Day and Night periods are defined below in the Changeover settings.
  - **Sensitivity:** Select from Standard, Enhanced or High depending on the detection requirements. They respectively correspond to Standard Fire Detection (SFD) / Class C, Early Warning Fire Detection (EWFD) / Class B or EWFD / Class A. VEA operation in Class A environment requires other considerations. The threshold and the delay are used together to decide when to trigger the alarm condition.
  - **Alert Threshold:** Sets the Alert threshold as a ratio of the Fire 1 Threshold. The Action Threshold will be set midway between Alert and Fire 1.
- **Delay:** The length of time between the alarm threshold being reached and the relay operation.
- **Changeover:**
  - **Work Days:** Select which days use both day and night thresholds. Night time thresholds are used if a day is not selected.
  - **Day / Night Changeover Time:** The settings for the timing of the threshold changeover.
  - **Holidays:** The settings used to define a holiday period. Use the dropdown calendars to choose the start and end times of the holiday (or break) period. Night time thresholds are used during the holiday period.
- **UL7 Mode:** Sets the required UL7 operating mode:
  - Open Area.
  - Special Applications.
  - Not Applicable: For non UL7 installations.

5.5.7 Airflow Options

Airflow options provide the ability to set:

- limits for what the detector considers to be normal airflow behavior for the sampling network
- pump speed

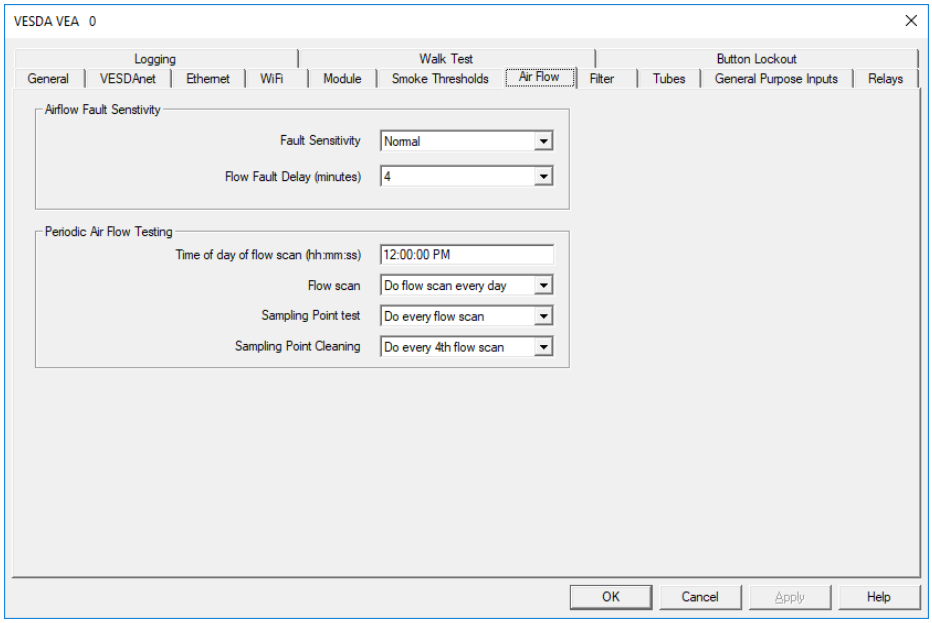

Figure 5-21: Airflow Options

The Airflow Fault configuration options are as follows:

- **Fault Sensitivity:** The settings for air flow fault thresholds. Select from Narrow, Normal, Wide. The Narrow setting makes the detector the most sensitive to airflow reduction or increase due to faults in the tubing and the Wide setting the least sensitive. The threshold and the delay are used together to decide when to trigger the air flow fault condition.
- **Flow Fault Delay:** Select the air flow fault delay.

The Periodic Air Flow Testing configuration options are as follows:

- **Time of day of flow scan:** Sets the time of day for the scan of all tubes for air flow changes due to faults in the tubing. The process is called a Flow Scan.
- **Flow scan:** Sets how often the Flow Scan is performed.
- **Sampling point test:** Sets how often a sampling point test is done along with the Flow Scan. The user has the options: Disabled (i.e. no sampling point test is done), Every Flow Scan or Every Second Flow Scan.
- **Tube cleaning:** Sets how often tube cleaning is done along with the Flow Scan. The options are:
  - Disabled
  - Every 7th Flow scan through to every 35th Flow Scan.

5.5.8 Tube Configuration Options

Tube Name options provide the ability to enter area names for where the sampling points are located, and the sensitivity of each tube.

Tube numbers are pre-allocated - 1-40 for the detector.

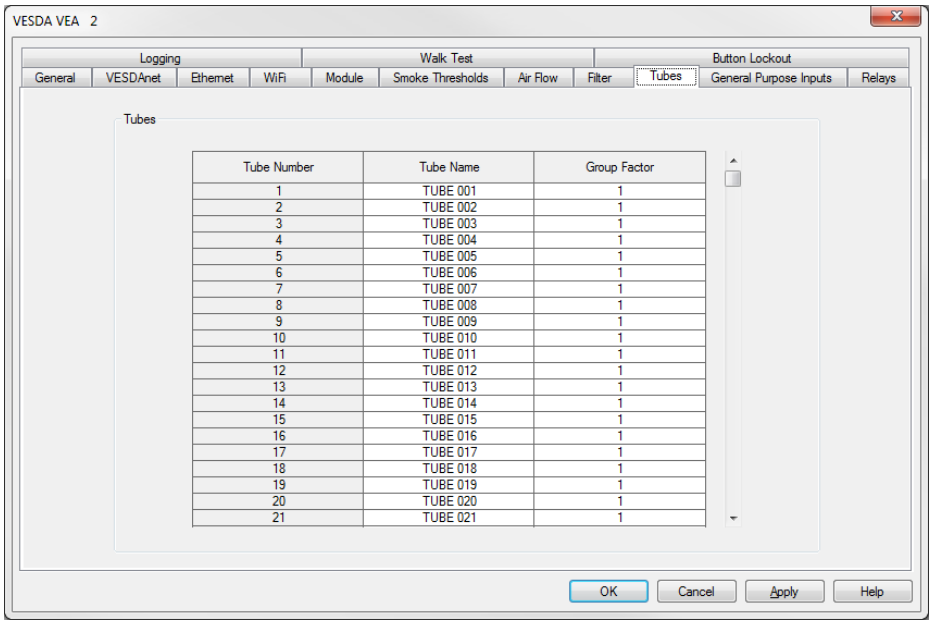

Tube Number	Tube Name	Group Factor
1	TUBE 001	1
2	TUBE 002	1
3	TUBE 003	1
4	TUBE 004	1
5	TUBE 005	1
6	TUBE 006	1
7	TUBE 007	1
8	TUBE 008	1
9	TUBE 009	1
10	TUBE 010	1
11	TUBE 011	1
12	TUBE 012	1
13	TUBE 013	1
14	TUBE 014	1
15	TUBE 015	1
16	TUBE 016	1
17	TUBE 017	1
18	TUBE 018	1
19	TUBE 019	1
20	TUBE 020	1
21	TUBE 021	1

Figure 5-22: Tube Name Options

The Tube configuration options are as follows:

- **Tube Name:** The name of each tube. This name is displayed when an alarm occurs and the system has found smoke present for that tube.
- **Group Factor:** The sensitivity of a tube. The group factor should be set equal to the number of odd (or even) numbered sampling points sampling from a particular space. For example, if Tubes 2 and 4 were sampling from the same space, then Group Factor should be set to two for tubes 2 and 4. If tubes 5 , 7 and 9 were sampling from a particular space then Group Factor would be set to 3 for tubes 5, 7 and 9. However, if tubes 1 and 2 were sampling from a particular space then group factor would be set to 1.

5.5.9 General Purpose Inputs Options

The General Purpose Inputs options page provides the ability to control the behavior of the Unmonitored and Monitored General Purpose Inputs (GPIs).

The GPIs can be configured to initiate a number of different actions.

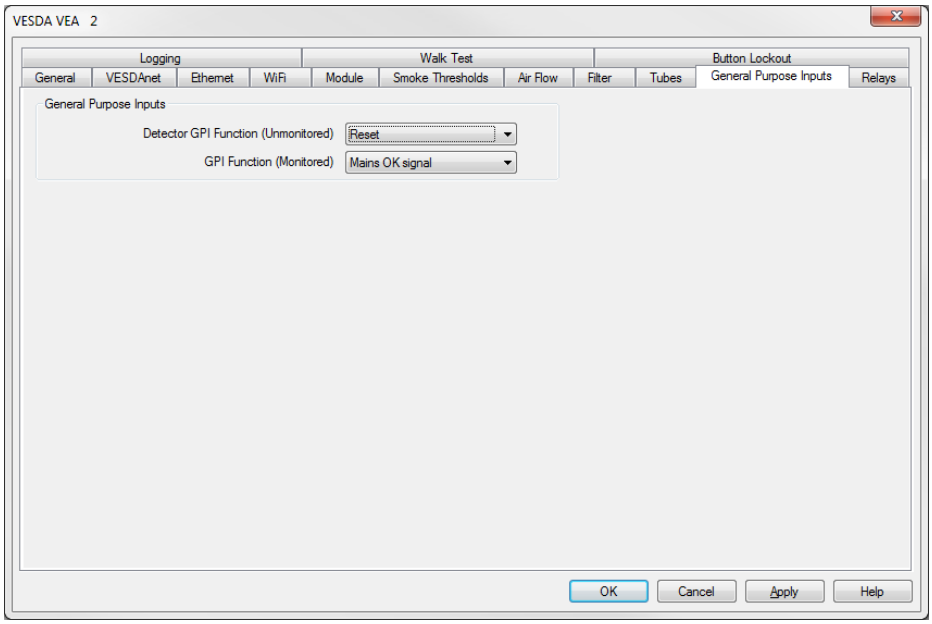

Figure 5-23: General Purpose Input Options

The Input / Output configuration options are as follows:

- **GPI function (Unmonitored) and GPI function (Monitored):** Refer to Table 5-3 below for a description of the individual selections.

Table 5-3: GPI Operation

Function	State Change	
External Reset	**Unmonitored GPI** The detector resets on a 0 VDC to 5 VDC rising edge. **Monitored GPI** The detector resets on a contact closure.	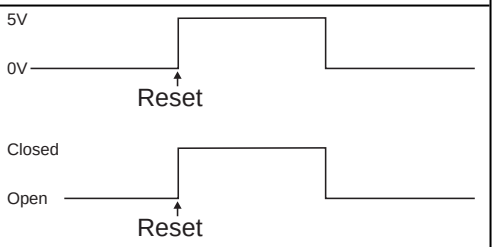

Table 5-3: GPI Operation (continued…)

Function	State Change	
Mains OK	**Unmonitored GPI** • The detector reports “Power Supply AC Input Failure” (fault 761) when ≤ 2 VDC. • The detector does not report “Power Supply AC Input Failure” (fault 761) when ≥ 5 VDC. **Monitored GPI** • The detector does not report “Power Supply AC Input Failure” (fault 761) while the contact is open. • The detector reports “Power Supply AC Input Failure” (fault 761) while the contact is closed. Refer to Figure 4-20 in Section 4.3.10 on page 36 and Section 4.3.11 on page 36 for further information.	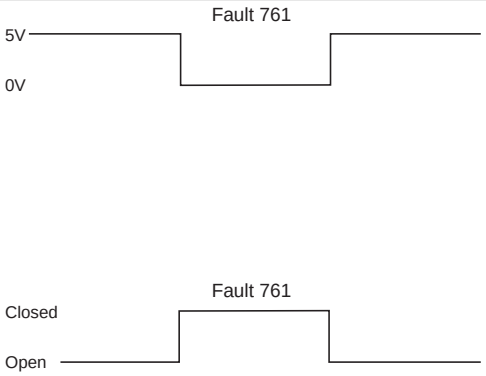
Standby Mode	**Unmonitored GPI** • The detector is held in Standby mode (see Section 1.1) while ≥ 5 VDC. • The detector exits Standby mode at a 5 VDC to 0 VDC falling edge. **Monitored GPI** • The detector is held Standby mode (see Section 7.1) while contact is closed. • The detector exits Standby mode when the contact opens. **Note:** No alarms can be generated while the detector is in standby mode.	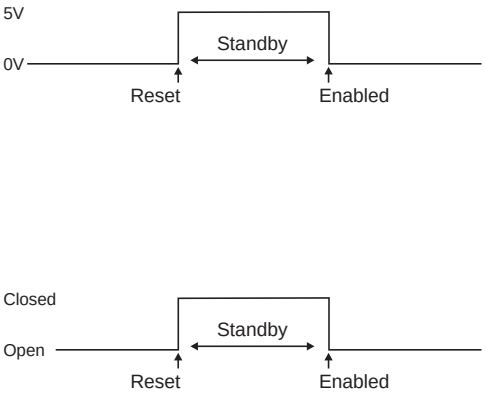
Disable	**Unmonitored GPI** • The detector is held disabled while ≥ 5 VDC. • The detector is enabled on a 5 VDC to 0 VDC falling edge. **Monitored GPI** • The detector is held disabled while contact is closed. • The detector is enabled when the contact opens. **Note:** No alarms are signalled while the detector is disabled.	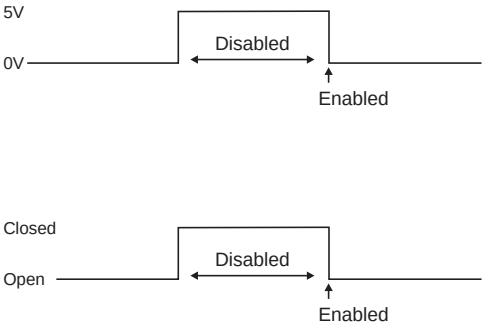

Table 5-3: GPI Operation (continued...)

Function	State Change	
Use Night-time Threshold	**Unmonitored GPI** • The detector uses night-time thresholds while ≥ 5 VDC. **Monitored GPI** • The detector uses night-time thresholds while the contact is closed. **Note:** While the GPI is off (contact open, voltage ≤ 2V), the day or night thresholds are determined according to the internal clock and the configuration of the detector (using Xtralis VSC).	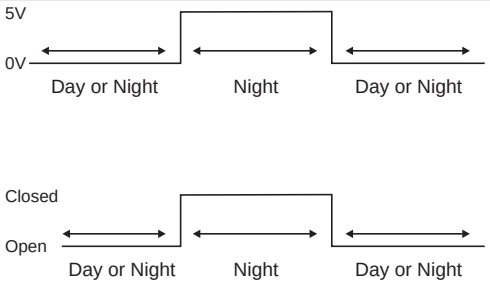

Reset + Disable	**Unmonitored GPI**
	• Detector resets on a 0 VDC to 5 VDC rising edge and on 5 VDC to 0 VDC falling edge, and;
	  • Detector is held disabled while ≥ 5 VDC.
	  • Detector is enabled on a 5 VDC to 0 VDC falling edge.
	Monitored GPI
	• The detector resets on closure or opening of the contact, and;
	  • The detector is held disabled while contact is closed.
	  • The detector is enabled when the contact opens.
		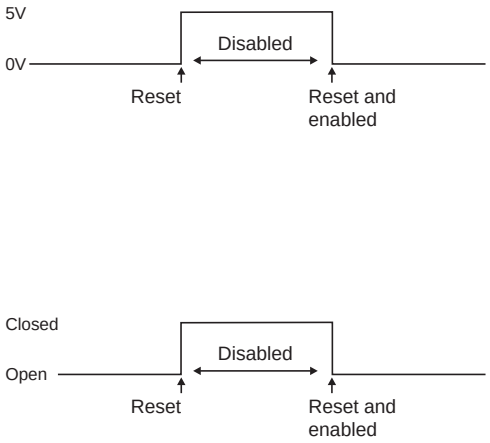

Inverted Reset	**Unmonitored GPI** • The detector resets on a 5 VDC to 0 VDC falling edge. **Monitored GPI** • The detector resets on the opening of the contact.	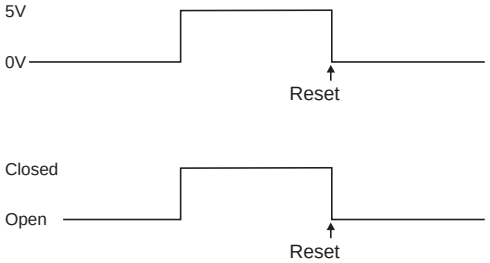

Notes:

- When the detector is disabled or set to standby via the GPI, the status cannot be changed through the normal enable / disable function on the front panel or via Xtralis VSC. Refer to Section 2.3.2 on page 6 for further information.
- When the night-time thresholds are invoked via the GPI, the clock settings for day-start and night-start are overridden.

5.5.10 Relay Options

The Relay options page provides the ability to determine which alarm or fault condition is assigned to each relay and whether each condition is latched. In addition, each relay can be configured Normally Energized or Normally De-Energized.

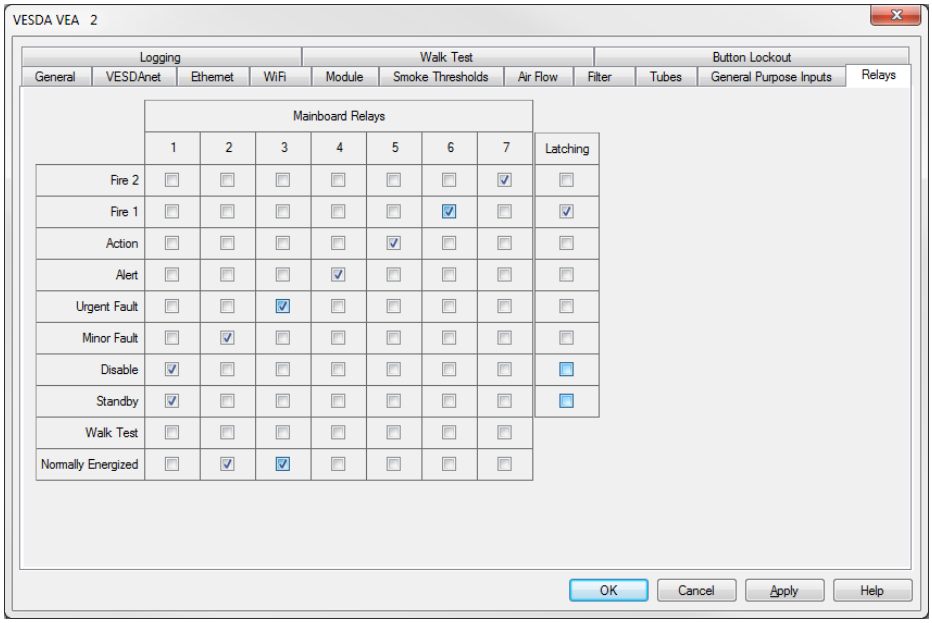

Figure 5-24: Relay Options

Relay Assignments: Select the conditions you want to assign to each relay by checking the checkbox(es) under the relay. The blue coloured checkboxes cannot be changed; e.g. Relay 6 will always respond to the Fire 1 condition. You can assign more than one condition to a relay.

Normally Energized: The Normally Energized or Normally De-Energized setting of each relay can be configured using the checkbox in the Normally Energized row:

- If checked the relay is set Normally Energized.
- If unchecked the relay is set Normally De-energized.

In the Normally De-energized mode no drive is applied to the relay coil until the assigned condition such as Alert or Fire 1 occurs. The Normally Energized mode is the opposite. Drive is removed from the relay coil when the condition occurs.

The default mode of the relays is listed in Table 4-2.

Latching: If the cause of a condition is removed (for example, smoke decreases below the threshold) and latching is enabled, the detector “remembers” the condition and holds the corresponding relays and displays in the active state as though the cause of the condition were still active.

Latching can be enabled for any alarm condition or for urgent or minor fault by checking the corresponding latching checkbox to the right of the condition.

Configuration of latching for individual alarm or fault conditions requires firmware version 5.30 or higher.

5.5.11 Logging Options

The Logging options page allows the user to configure the detector's event logging and also the reporting of smoke status on VESDAnet remotely on Xtralis VSC or iVESDA.

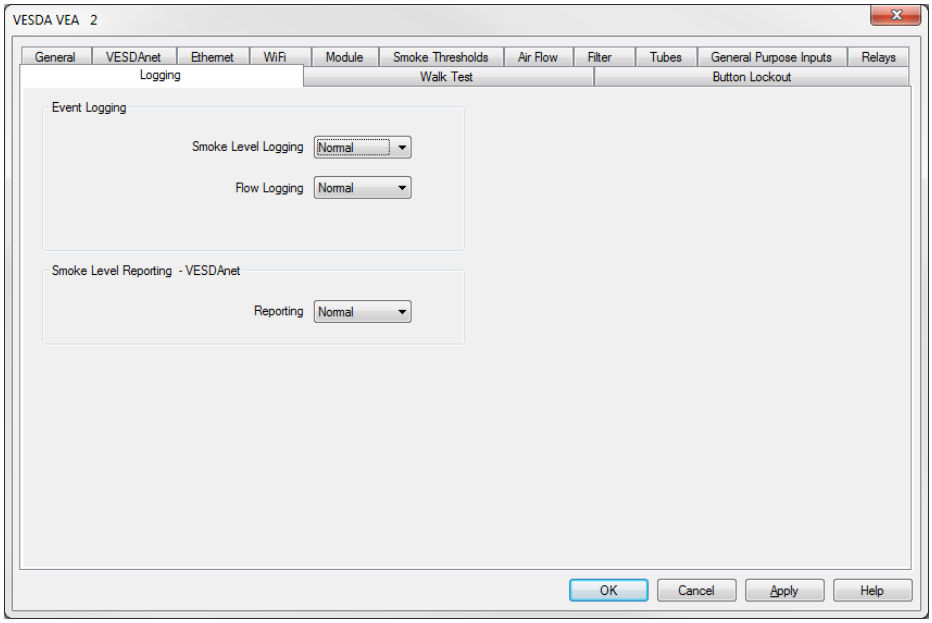

Figure 5-25: Logging Options

Logging options are as follows:

Event Logging

- **Smoke Level Logging:** Set the level of smoke level logging in the detector's event log. The recommended setting is Normal unless more detailed logging is required to investigate a site issue.
- **Flow logging:** Set the level of air flow logging in the detector's event log. The recommended setting is Normal unless more detailed logging is required to investigate a site issue.

Smoke Level Reporting - VESDAnet:

- **Reporting:** Set the level of smoke level reporting on VESDAnet to Xtralis VSC or iVESDA. The recommended setting is Normal.

5.5.12 Walk Test Options

The Walk Test options page provides the ability to configure the Walk Test function. To run a Walk test, refer to Section 5.4.2 on page 59.

Before running walk test the user must first configure the tubes to be tested and the order of testing. This configuration is then saved to the detector memory and the Walk test can be re-run later with the same set of tubes and order of tubes.

Use the **-- >>** and **<<--** buttons to move all tubes between the Available Tubes list and the Selected Tubes list. Use the **->** and **<-** buttons to move individual tubes between the Available Tubes list and the Selected Tubes list.

Change the order of testing of tubes using the Up and Down buttons to the right of the Selected Tubes list.

This example shows that tubes 2,4,6, and 8 will be tested in that order:

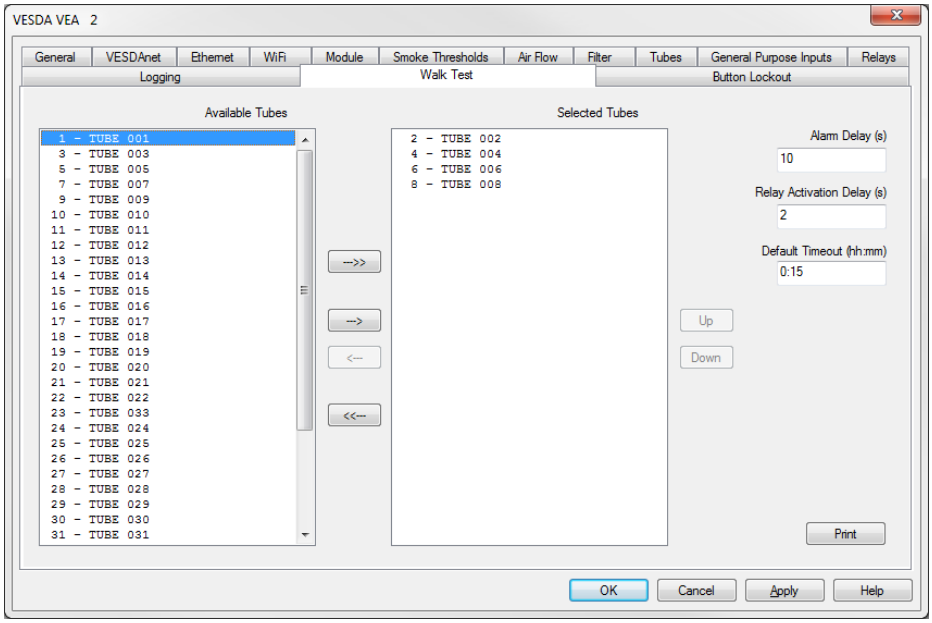

Other parameters:
Alarm Delay: The Alarm Delay is the time period for which the smoke level must be above the Fire 1 threshold before the detector recognises that the Walk Test Alarm has occurred for that tube.

Relay Activation Duration: The Relay Activation Duration is the time period in seconds for which the relay configured for Walk Test will turn on when the Walk Test Alarm occurs.

Default Timeout: The default timeout is the time period in hours and minutes after which the Walk Test ends if no Walk Test alarm occurs for the current tube being tested.

Print test order: The user can generate a list giving the order of tubes to be tested by clicking the **Print** button. For example:

```
Walk Test Order

===============

2 - TUBE 002

4 - TUBE 004

6 - TUBE 006

8 - TUBE 008
```

5.5.13 Button Lockout Options

The Button Lockout options page enables the user to configure the functionality of the detector's front panel button.

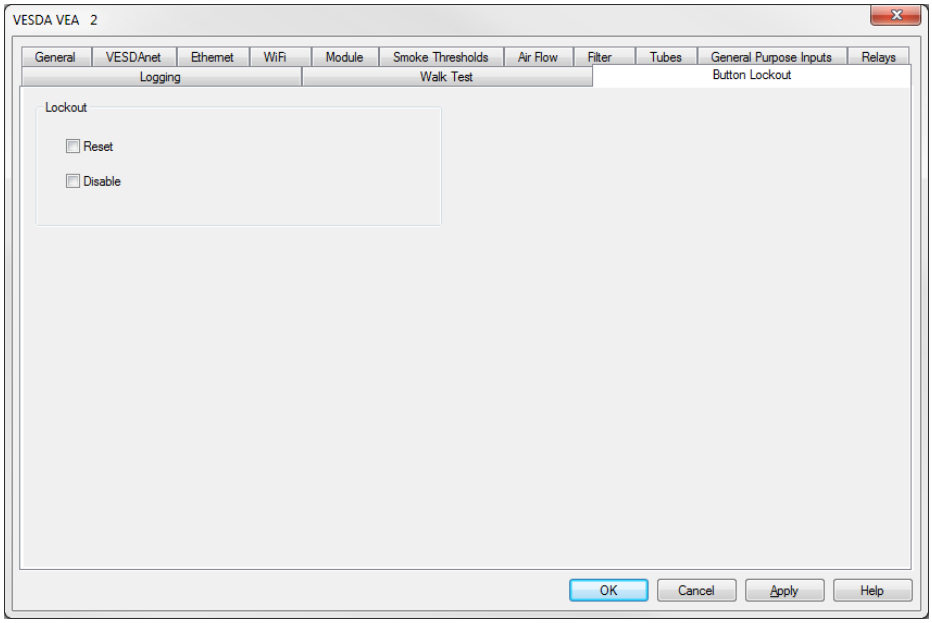

Figure 5-26: Button Lockout Options

To prevent execution of the Reset and Disable functions from the detector front panel button, check the checkbox for that function.

This page is intentionally left blank.

6 Commissioning

Please see the VESDA-E VEA commissioning guide, document 32407, for instructions on how to commission a VEA system.

6.1 Hand Over

Hand over of the system occurs once you and the customer are satisfied that all aspects of commissioning the system have been addressed and meet the required standards. The system must be ready for day to day operation prior to hand over. To hand over the system to the client, you should:

- Ensure that the VESDA-E commissioning forms are complete and all relevant sections have been filled in.
- If you have used Xtralis VSC, select the Device or Address then select **File | Print** to print out a copy of configuration details and include a copy with the hand over documents.
- Obtain the relevant signatures.
- Ensure that relevant attachments have been included with the commissioning form.
- Make copies of the completed commissioning forms and attachments and forward these to:
  - Appropriate Xtralis Sales Office
  - Installing contractor
  - Designer of the system
  - End user of the system

This page is intentionally left blank.

7 Maintenance

The VEA system employs centralized automated testing and maintenance during its normal operation. This ensures that end-to-end system integrity is maintained, including the detector, tubes and sampling points.

Preventative maintenance is not required. During routine site maintenance, ensure that there are no faults present and conduct a centralized smoke test.

Notes:

- Maintenance can be conducted by the original Xtralis authorized installer or an Xtralis authorized distributor or service contractor.
- The required frequency of maintenance checks may vary depending upon local codes and standards and the environment of the installation.

Caution: While the detector or zone is disabled, no fire warnings will be annunciated by the detector. Prior to any maintenance or testing:

- Inform appropriate supervising authority about the risk associated with disabling a detector or zone.
- Check to see if the detector is also being used by a third party.
- Ensure that any ancillary devices dependent on the detector are isolated before work commences.

Attention : Pendant que le detecteur ou la zone est desactivee, aucun feu d'indication va etre emis par le detecteur. Avant tout entretien ou tester:

- Informer les autorité de supervision appropriée sur le risque associé à un détecteur ou une zone d'isolement.
- Vérifier si le détecteur est également utilisé par une tierce partie.
- S'assurer que tout les appareils auxiliaires dépendants sur le détecteur sont isolés avant de commencer aucun travail.

7.1 Standby

When maintenance is performed on the tube network or sampling points it is recommended that you temporarily set the detector to Standby in order to turn off the aspirator. Setting the VEA-040-A00-UL to Standby mode deactivates the aspirator and stops all detection of alarms (but not detection and signaling of faults). Standby mode is signaled on relay #1 and relay #3 by default. Other relays may also be configured to signal standby mode. Refer to sections 4.3.6 and 5.5.10 for further information. For example, standby mode may be also signaled as an additional condition on the Fault Relay (Relay #3).

To set the detector to Standby mode using Xtralis VSC, select Go to Standby from the Device menu. The Disabled LED will blink and the aspirator will turn off.

To re-activate the unit, select End Standby from the Device menu.

Standby requires firmware version 5.30 or higher.

7.2 Opening the Door

Several maintenance functions require that front door be opened.

Open the Front Door

1. Insert an Allen key (preferred), Philips head screwdriver or flat blade screwdriver with the blade vertically oriented into the hole at bottom left and press firmly.
2. Pull the door open.

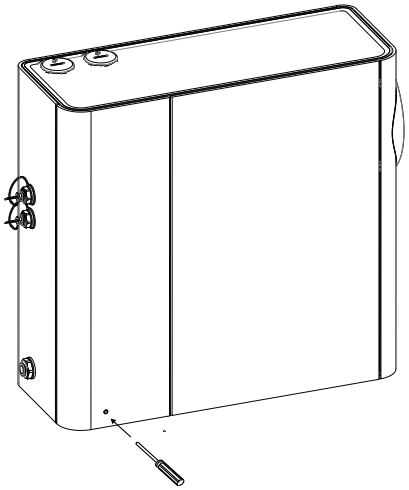

Figure 7-1: Open the door

7.3 Removing the Fascia

Several maintenance functions require that the fascia be removed from the VEA-040-A00-UL detector in order to perform them.

Caution: Electrostatic discharge (ESD) precautions need to be taken prior to removing the fascia from the detector. A wrist strap must be connected to the case of the detector (Figure 7-2).

Attention : Les precausions contre le decharge electrostatique dois etre respecter avant d'ouvrir le panneau du detecteur. Un bracelet doit être raccordé au panneau du détecteur (Figure 7-2).

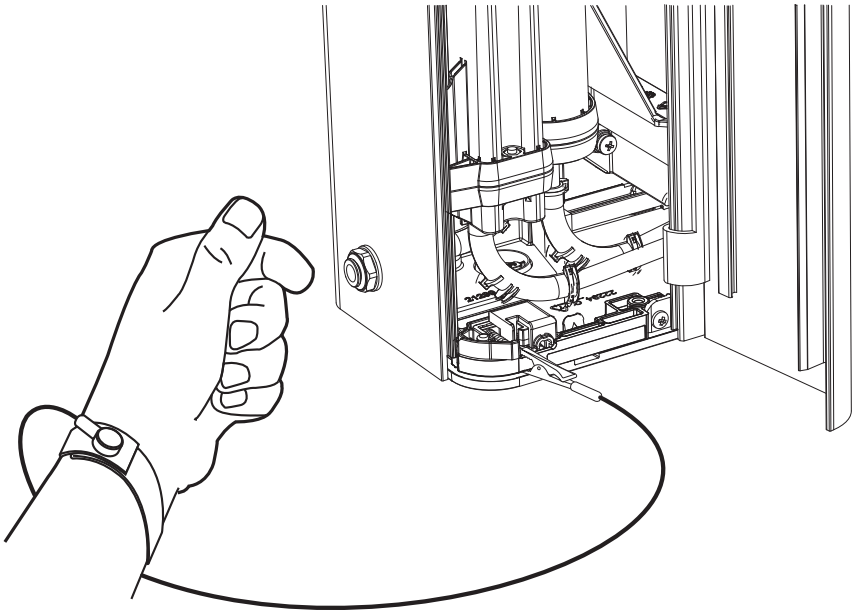

Figure 7-2: Wrist Strap application

Remove the Fascia

1. Turn off 24V power to the detector.
2. Remove the two screws along side the door hinge, as shown below in Figure 7-3.
3. Remove the fascia.

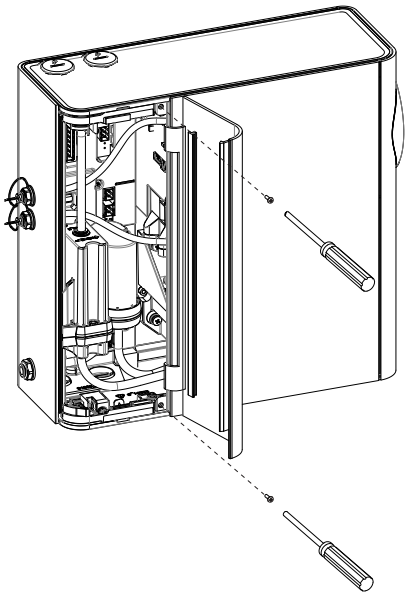

Figure 7-3: Fascia removal - remove screws

4. Disconnect the LCD loom (A) and LED loom (B) (Figure 7-4).

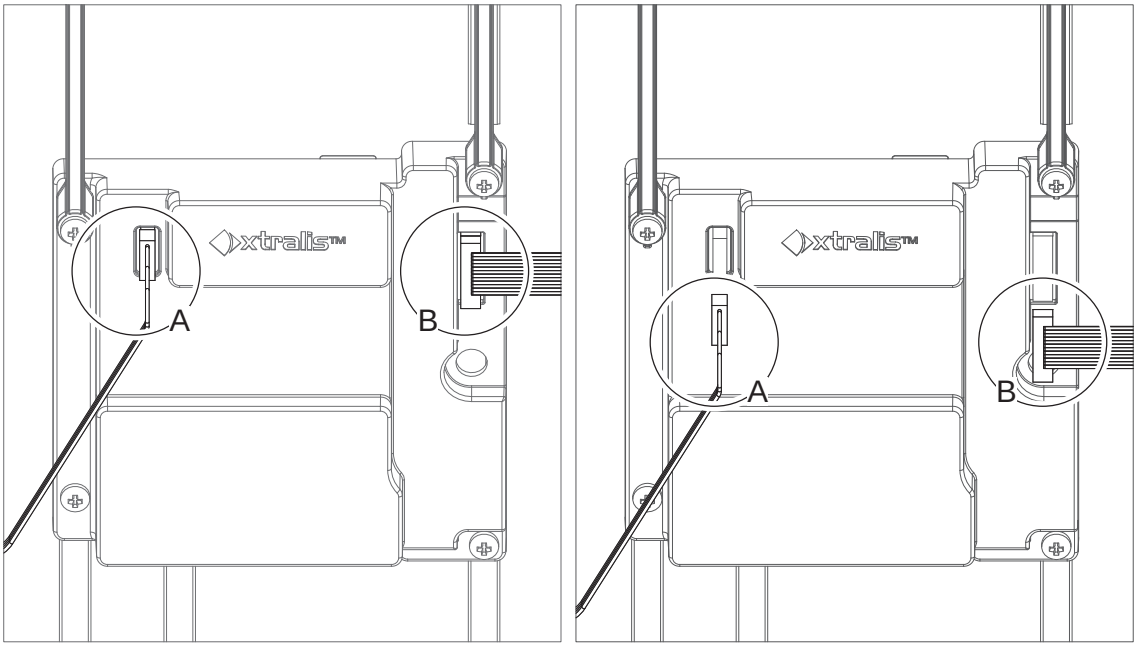

Figure 7-4: Disconnect the LCD and LED looms

7.4 Replacing the Filter

To maintain the operational integrity of the detector, it is recommended that the filter be replaced every two years, or when a filter fault occurs.

Filter replacement can be performed with the detector mounted in place.

Replacement Procedure

1. Turn off 24V power to the detector.
2. Remove the Fascia. Refer to Section 7.3 for further information.
3. Remove the seven circled screws (A) (Figure 7-5).

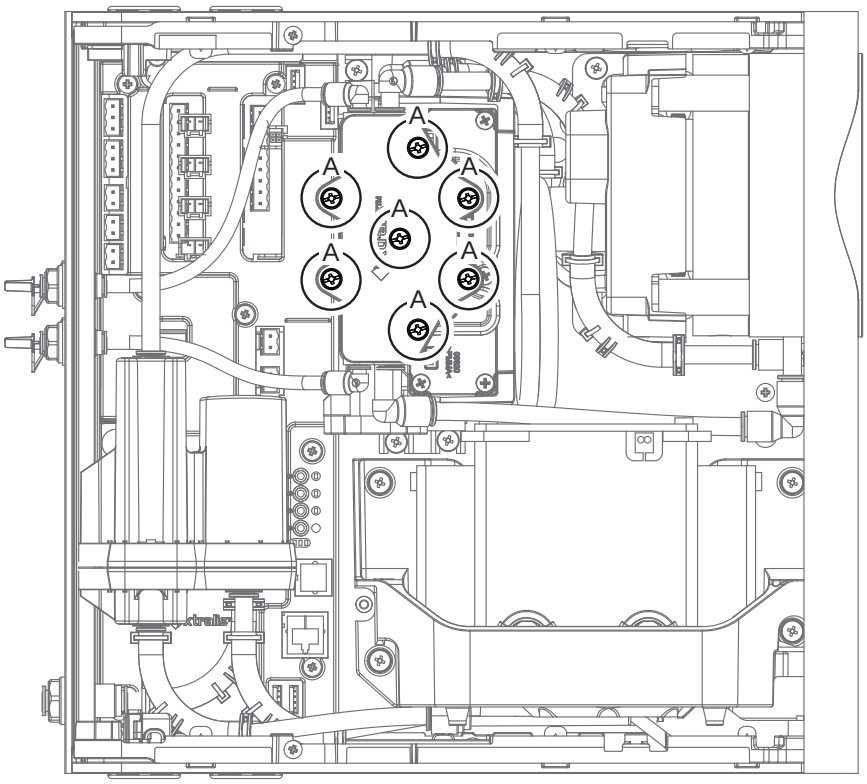

Figure 7-5: Remove filter retaining screws

4. Lift the lid with the foam filters installed inside

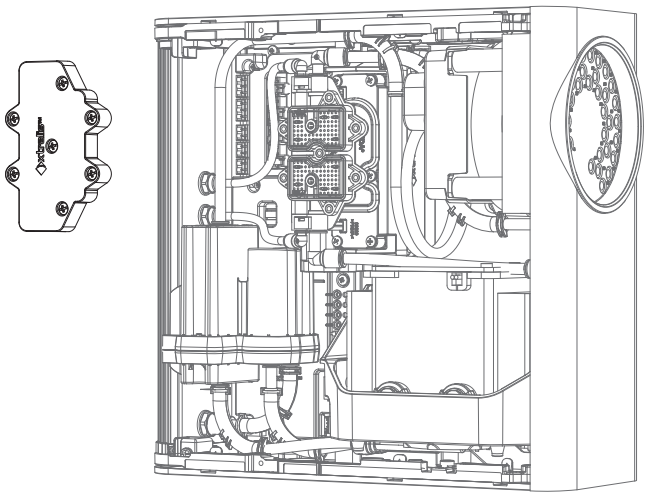

Figure 7-6: Lift the filter out from the detector

5. Replace with the new filter module by reversing the process. Ensure that the seven screws are tightened.
6. Use Xtralis VSC to perform the system leak test function to check that the lid is tight enough.

7.5 Replacing the Pump

Caution: Electrostatic discharge (ESD) precautions need to be taken prior to removing the fascia from the detector. A wrist strap must be connected to the case of the detector (Figure 7-2).

Attention : Les precausions contre le decharge electrostatique dois etre respecter avant d'ouvrir le panneau du detecteur. Un bracelet doit être raccordé au panneau du détecteur (Figure 7-2).

1. Turn off 24V power to the detector.
2. Remove the Fascia. Refer to Section 7.3 for further information.
3. Remove all tubes from the Rotary Valve. Use a screwdriver to press the black release button before pulling the tube out (Figure 7-7). **Ensure that the tubes are numbered before removing them.**

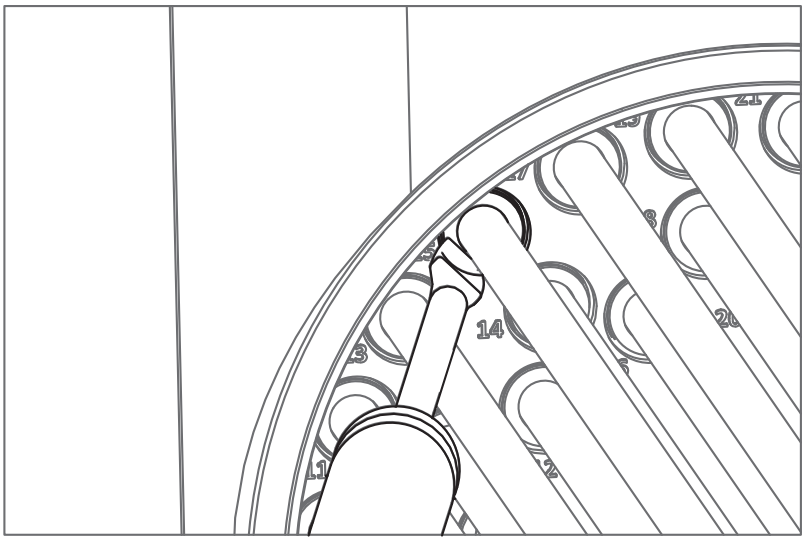

Figure 7-7: Tube Release Mechanism

4. Remove the detector from the wall and place on a flat surface with the back plate facing down.
5. Remove the top and bottom covers by pressing the tabs (Figure 7-8 and Figure 7-9).

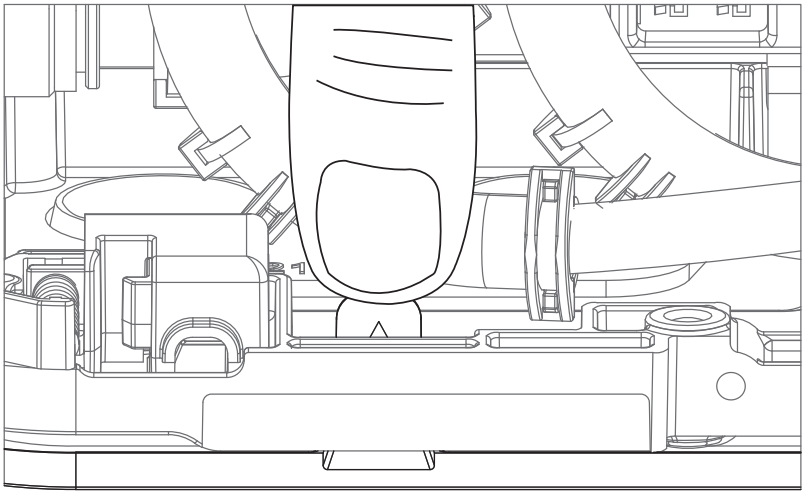

Figure 7-8: Tabs

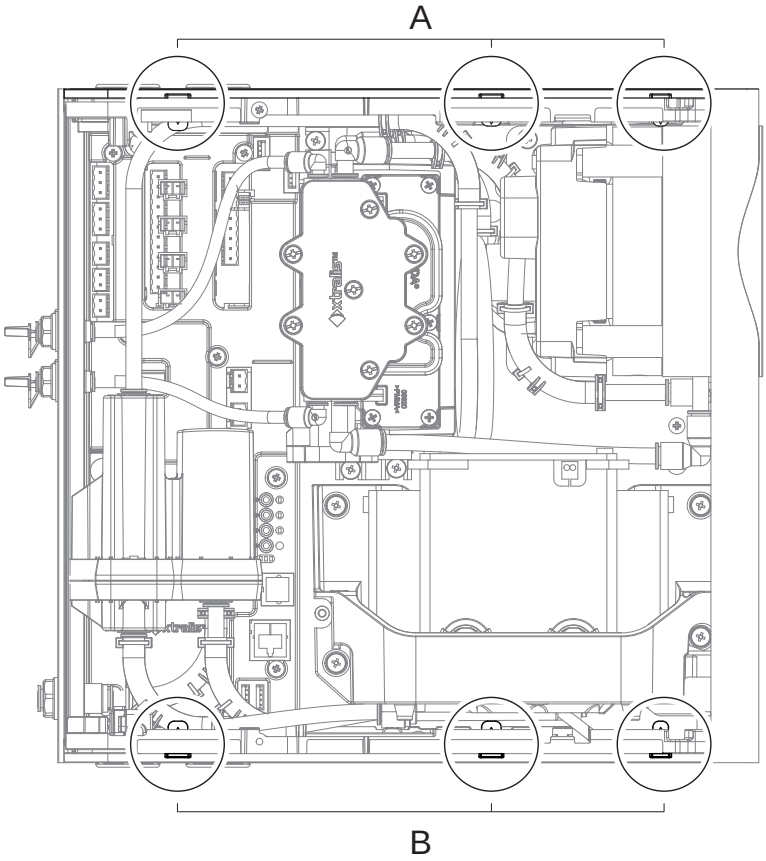

Legend	
A	Top cover retaining tabs
B	Bottom cover retaining tabs

Figure 7-9: Tabs used to remove top and bottom cover

6. Disconnect two pipes (A) and the cable (B) (Figure 7-10).

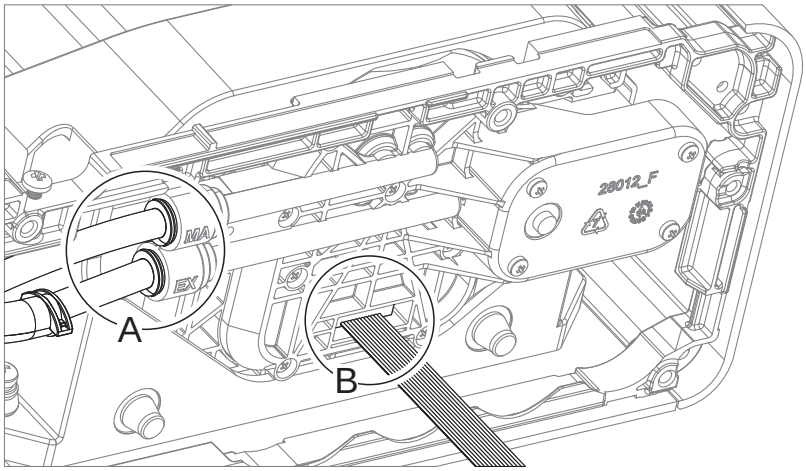

Figure 7-10: Remove pipes and cable

- To disconnect the pipes press on the black release button with either a screwdriver or spanner, as shown, while simultaneously pulling out the tube (Figure 7-11).

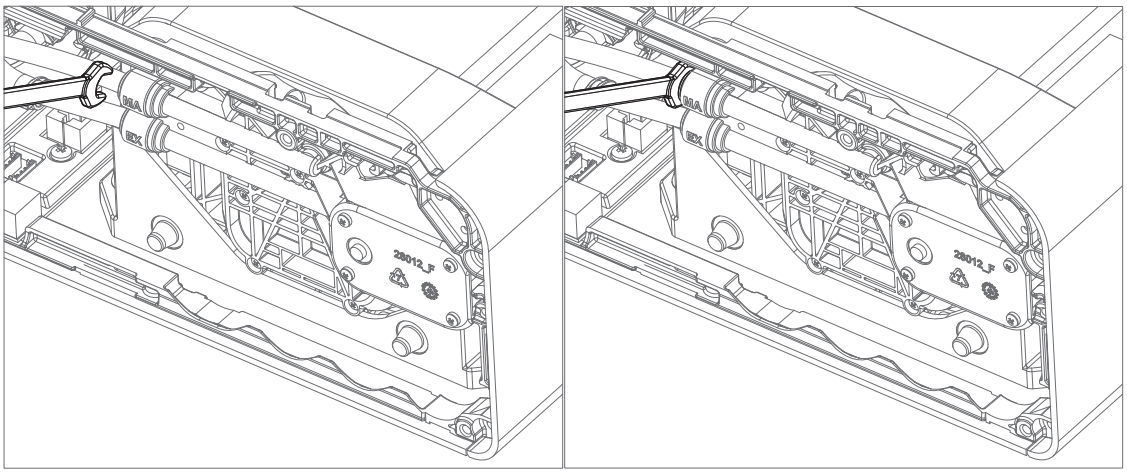

Figure 7-11: Remove pipes

- Remove the data cable from the Reverser (A) (Figure 7-12).

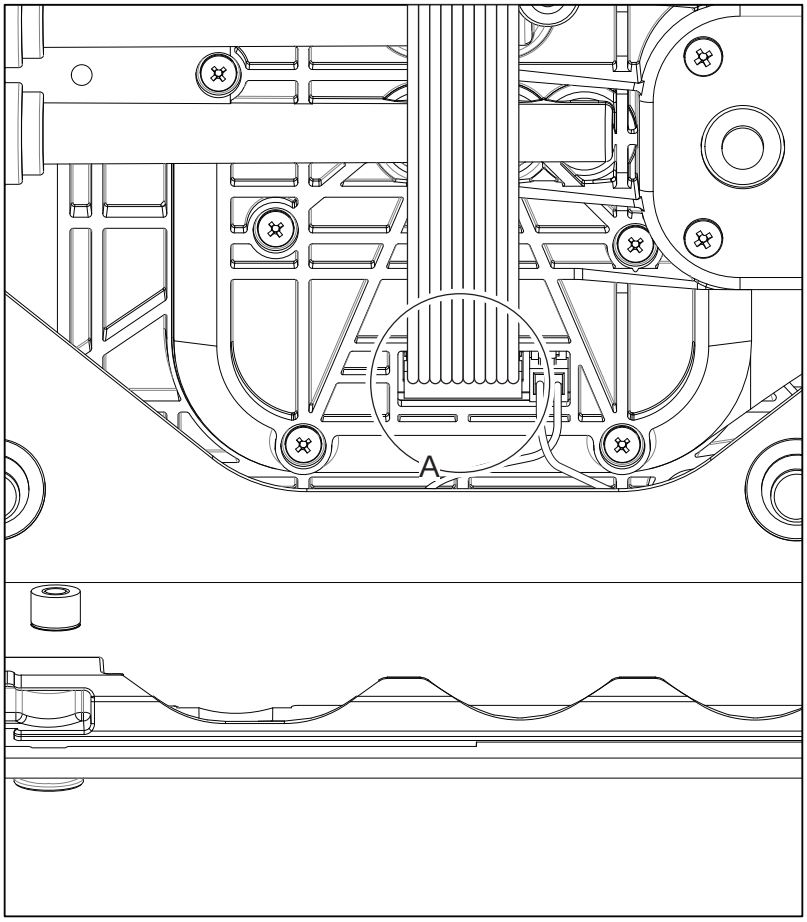

Figure 7-12: Remove cable

7. Remove the pump power cable from the rotary valve PCA. Use a screwdriver to press the lever on the side of the white connector as shown (A) (Figure 7-13).

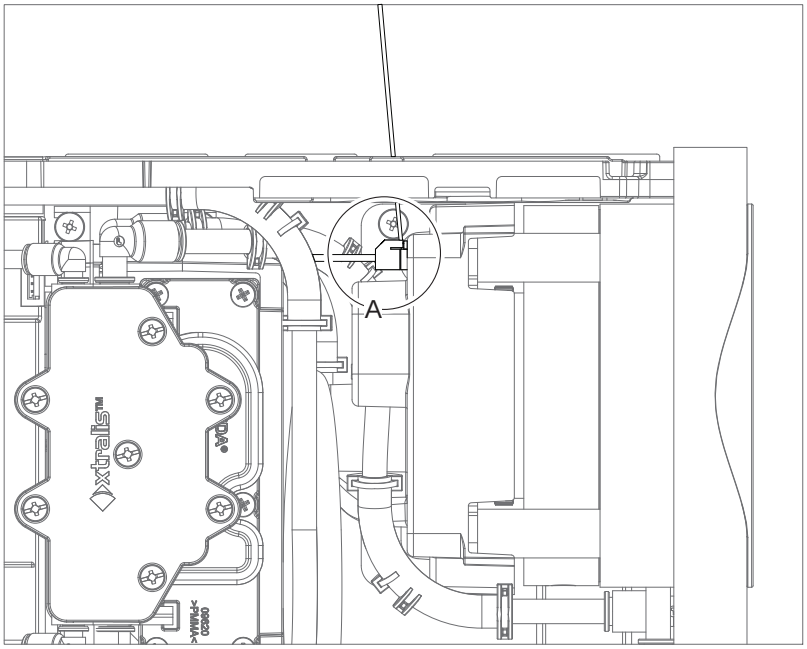

Figure 7-13: Remove power cable

8. Remove the four screws (A) which hold the pump to the detector's base (Figure 7-14).

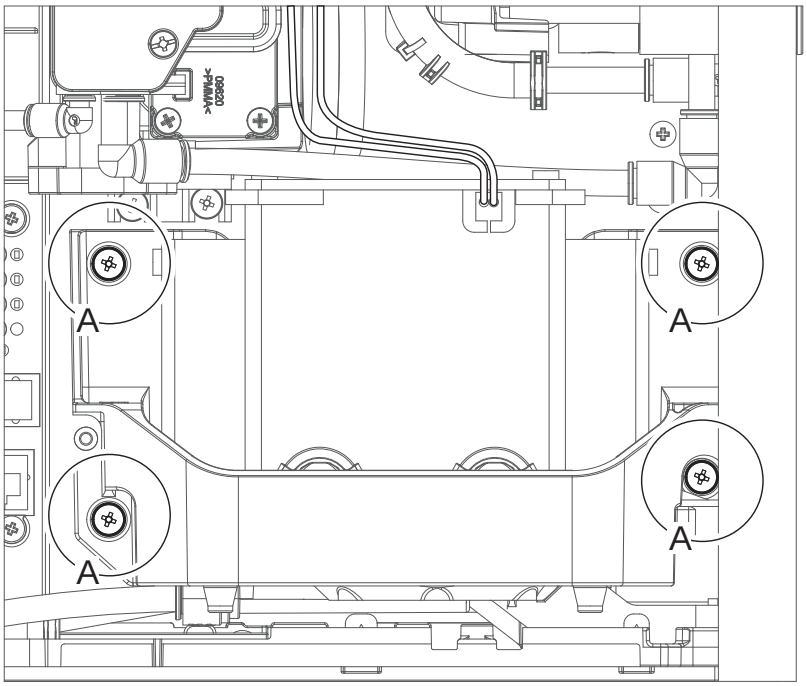

Figure 7-14: Remove pump retaining screws

9. Lift the pump out of the detector. Do this by tilting and lifting as shown (Figure 7-15).

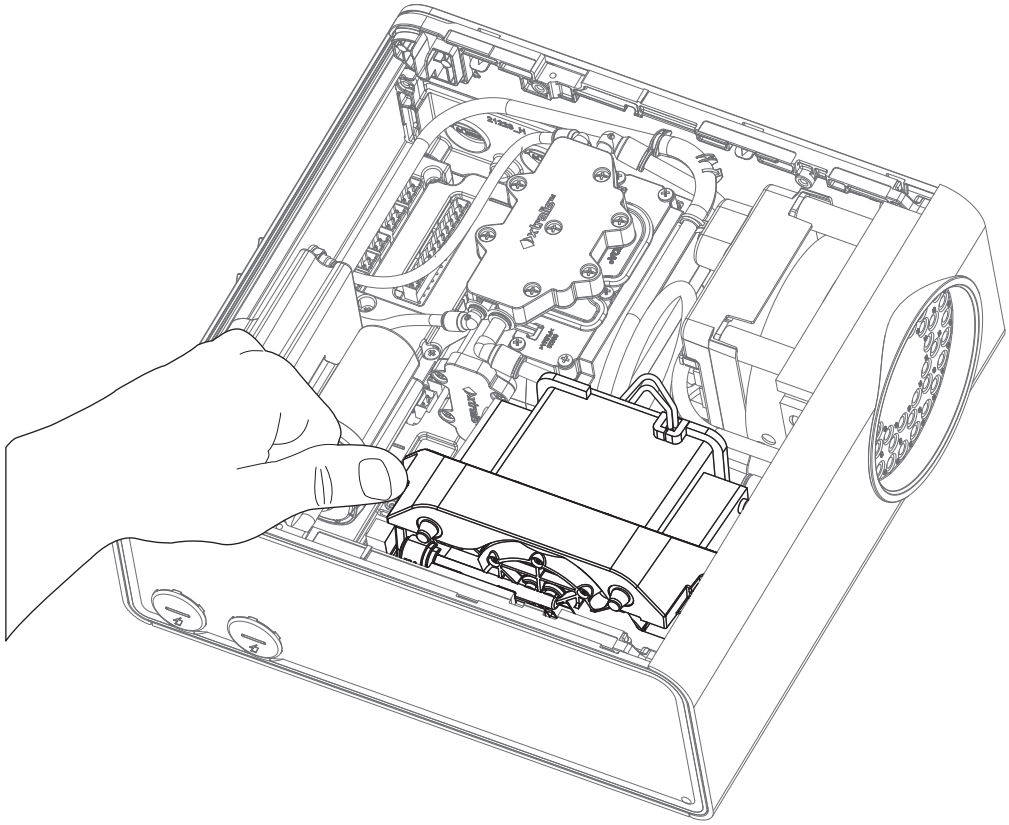

Figure 7-15: Remove pump

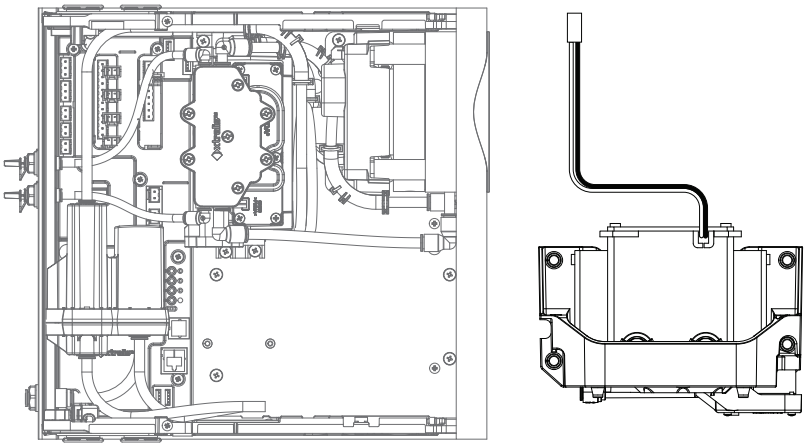

Figure 7-16: Pump removed

To re-install the pump:

1. Follow the removal procedure in reverse.
2. Perform a system leak test. Refer to Section 5.4 for further information.

7.6 Replacing the Rotary Valve

Caution: Electrostatic discharge (ESD) precautions need to be taken prior to removing the fascia from the detector. A wrist strap must be connected to the case of the detector (Figure 7-2).

Attention : Les precausions contre le decharge electrostatique dois etre respecter avant d'ouvrir le panneau du detecteur. Un bracelet doit être raccordé au panneau du détecteur (Figure 7-2).

1. Turn off 24V power to the detector.
2. Remove the Fascia. Refer to Section 7.3 for further information.
3. Remove the Pump. Refer to Section 7.5 for further information.
4. Disconnect two tubes, A and B (Figure 7-17). Use a spanner to push on the black release button on the pipe connector as shown while simultaneously withdrawing the pipe (Figure 7-18).

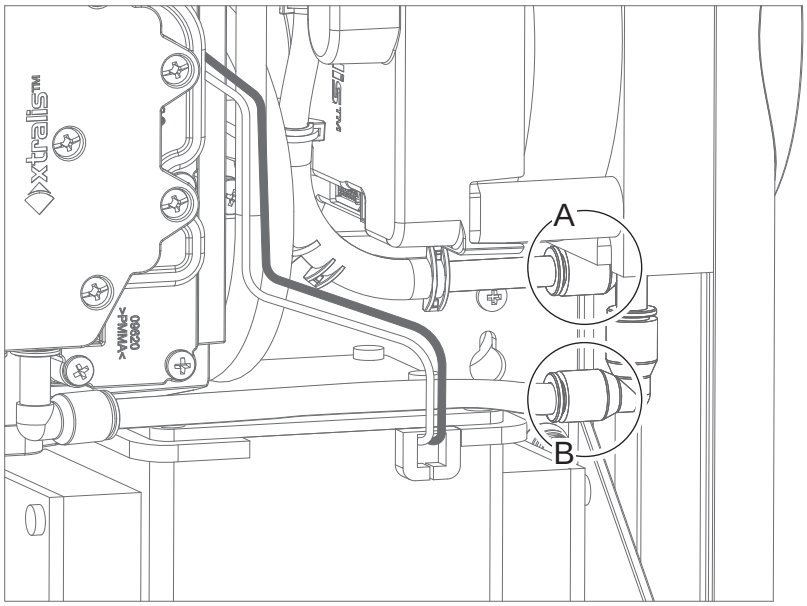

Figure 7-17: Disconnect pipes

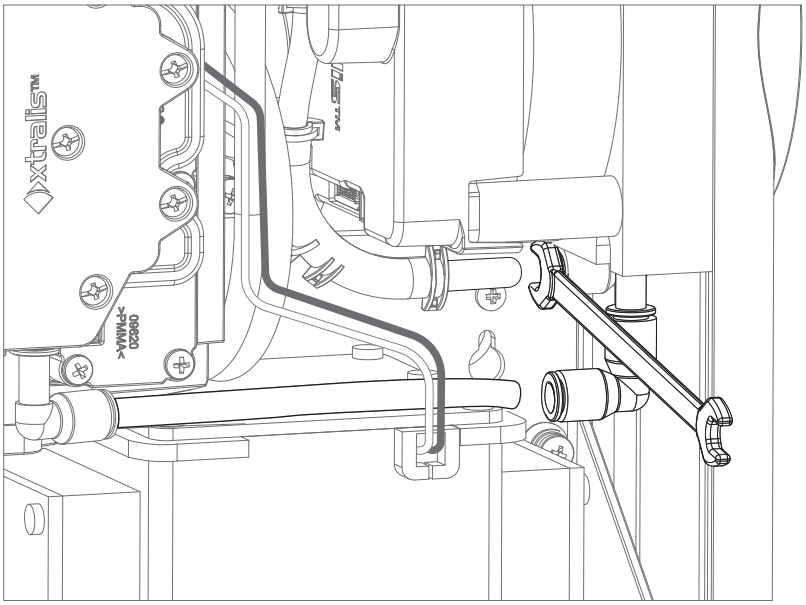

Figure 7-18: Disconnect pipe

5. Disconnect the three cables (A and B) (Figure 7-19).

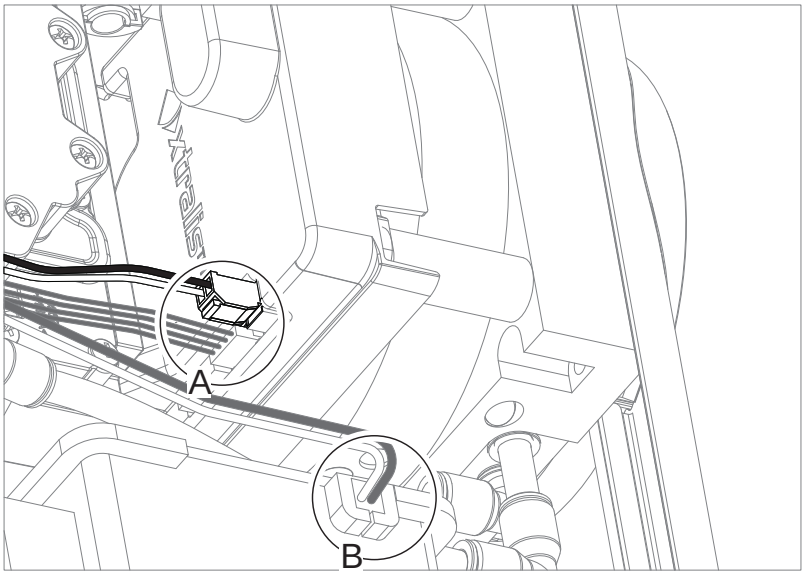

Figure 7-19: Remove cables

- To disconnect the red and black power cable, press the lever on the connector towards the top of the detector to unlatch the connector (Figure 7-20). The other two cables do not have a latch.

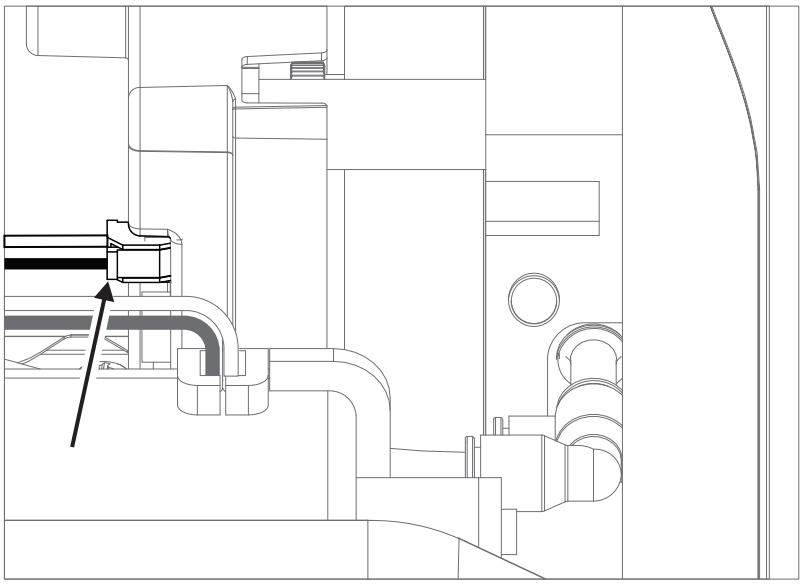

Figure 7-20: Disconnect power cable

6. Remove the two screws (A and B) securing the Rotary Valve to the baseplate (Figure 7-21, Figure 7-22).

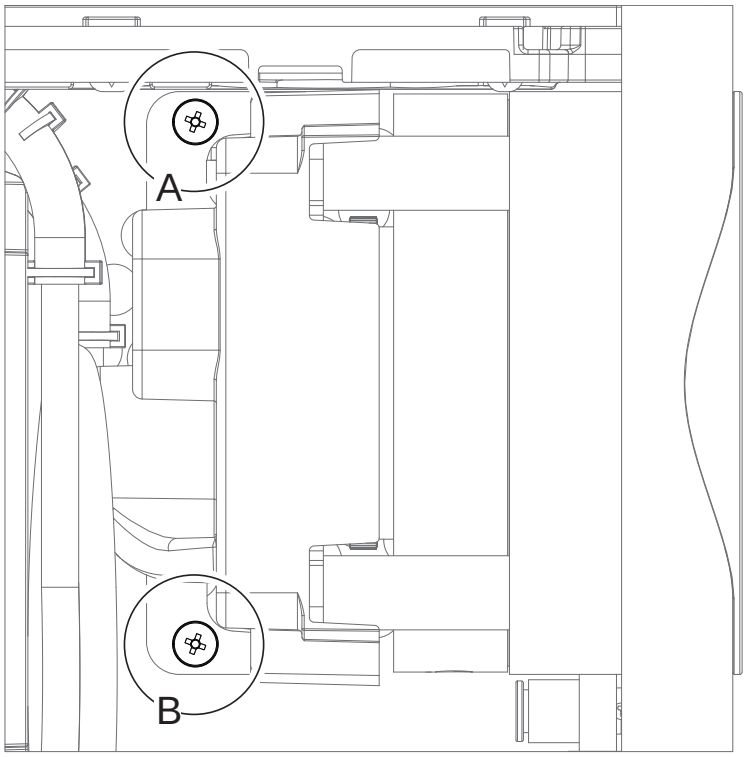

Figure 7-21: Remove rotary valve retaining screws

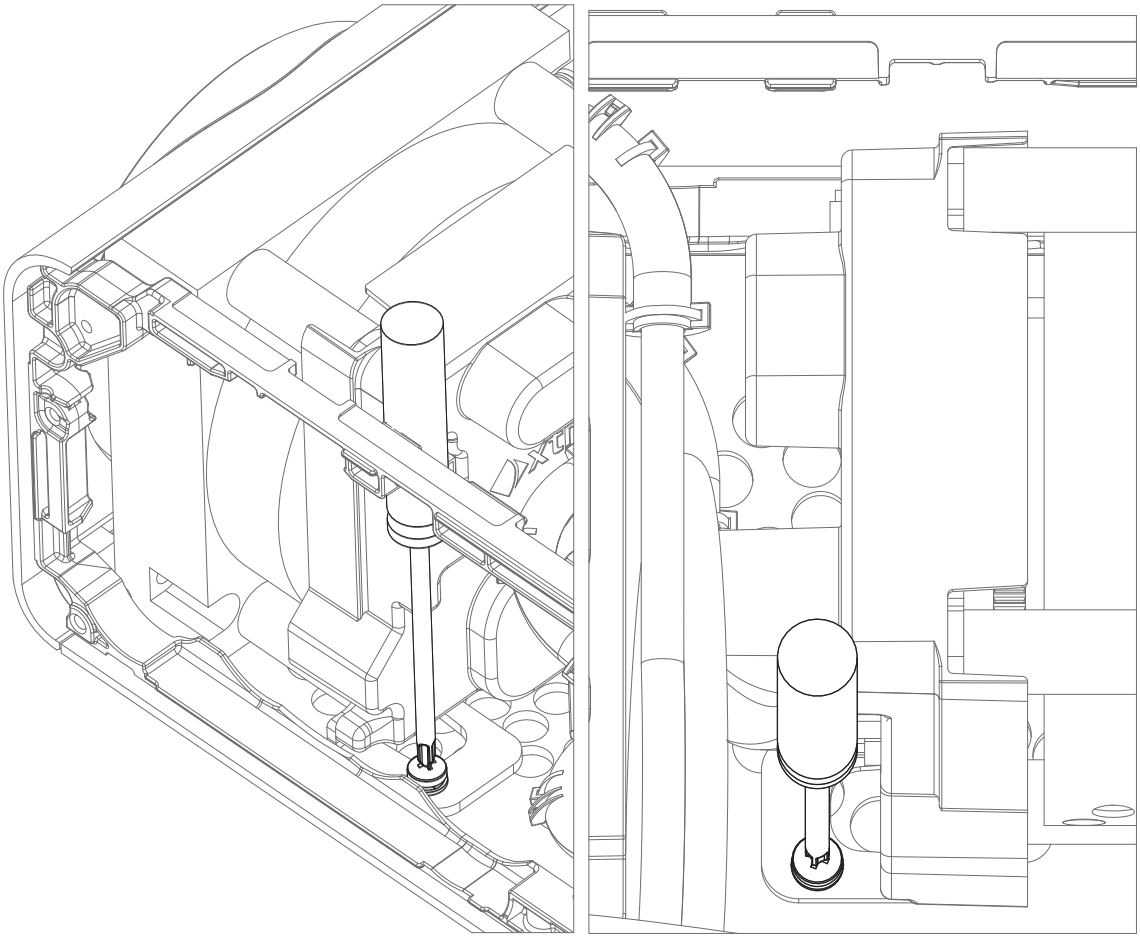

Figure 7-22: Remove rotary valve retaining screws

7. Tilt back the rotary valve and lift it out of the detector (Figure 7-23).

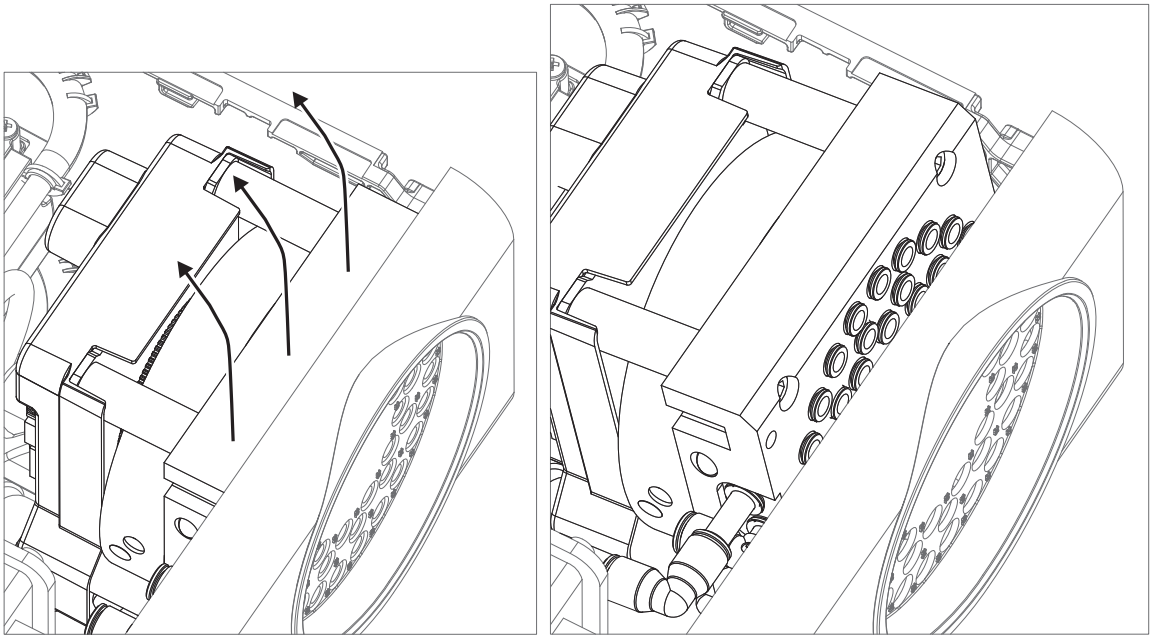

Figure 7-23: Remove rotary valve

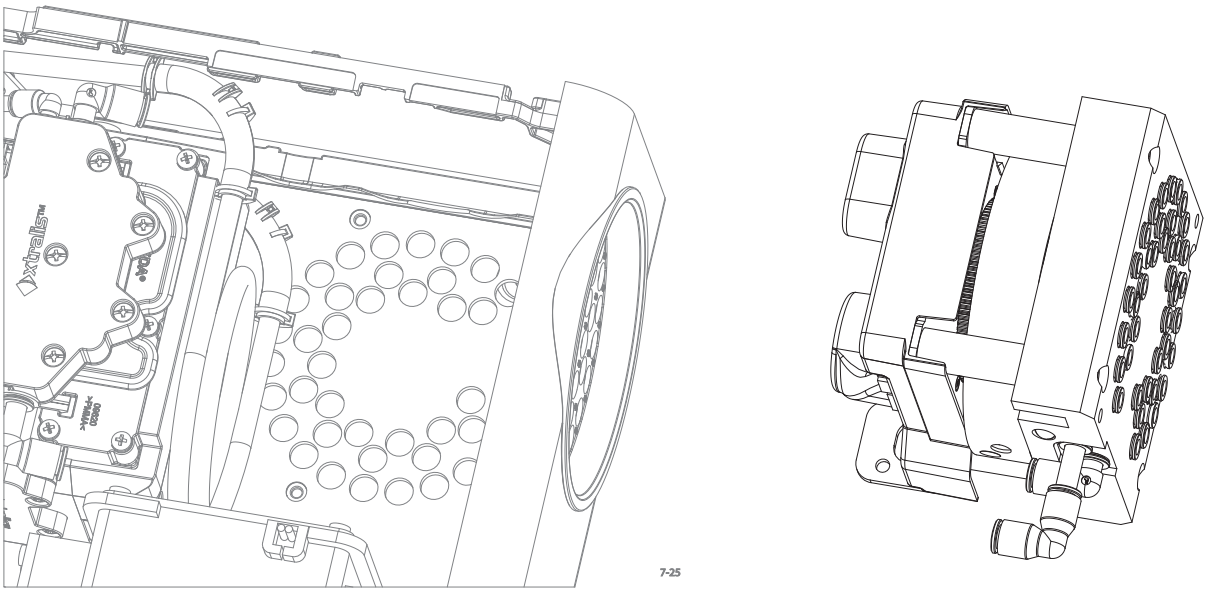

Figure 7-24: Detector after the Rotary Valve has been removed

Replacement

1. Follow the removal procedure in reverse.
2. Perform, a system leak test at the end of the process in order to determine that no air leaks have been introduced.

7.7 Replacing the Smoke Sensor Module

Caution: Electrostatic discharge (ESD) precautions need to be taken prior to removing the fascia from the detector. A wrist strap must be connected to the case of the detector (Figure 7-2).

Attention : Les precausions contre le decharge electrostatique dois etre respecter avant d'ouvrir le panneau du detecteur. Un bracelet doit être raccordé au panneau du détecteur (Figure 7-2).

1. Turn off 24V power to the detector.
2. Remove the Fascia. Refer to Section 7.3 for further information.
3. Remove the Pump. Refer to Section 7.5 for further information.
4. Disconnect the 4 wire loom (A) from the Rotary Valve (Figure 7-25).

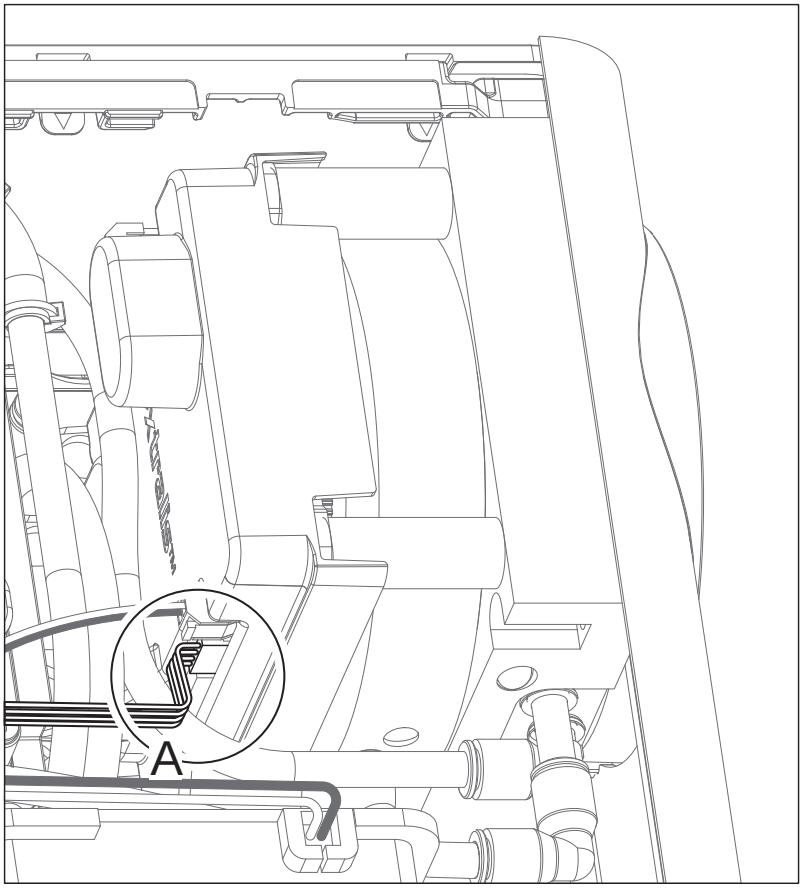

Figure 7-25: Disconnect data loom

5. Disconnect the smoke test port tubes (A and B) as shown in Figure 7-26 by pressing the black release button with a spanner and pull out the pipe as shown in Figure 7-27.

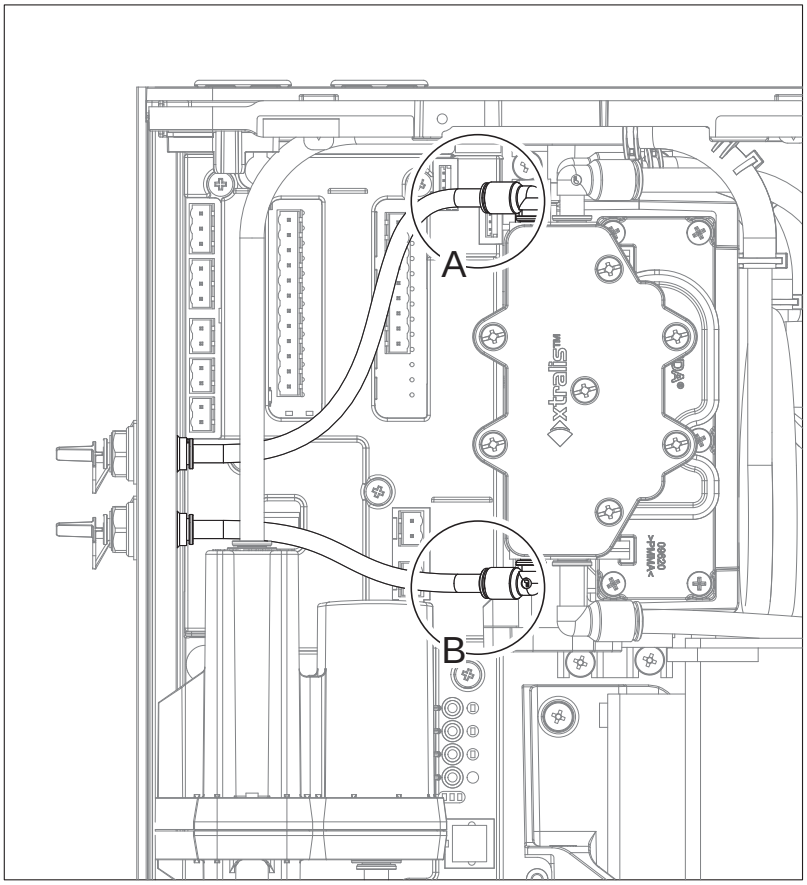

Figure 7-26: Smoke Test Port Pipes

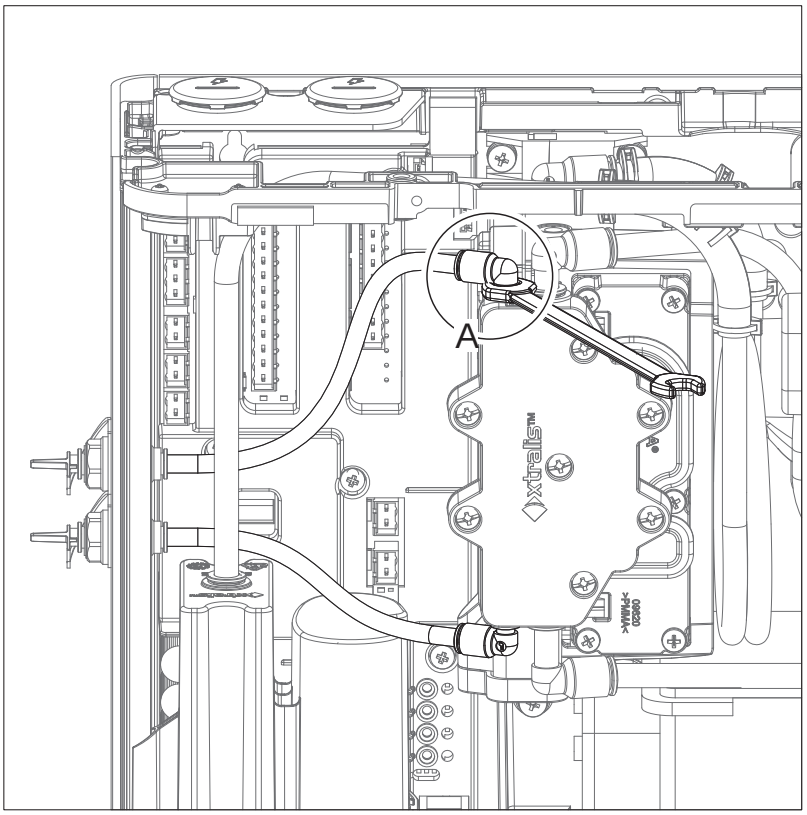

Figure 7-27: Disconnect Smoke Test Port Pipes

6. Remove the pipe (Figure 7-28).

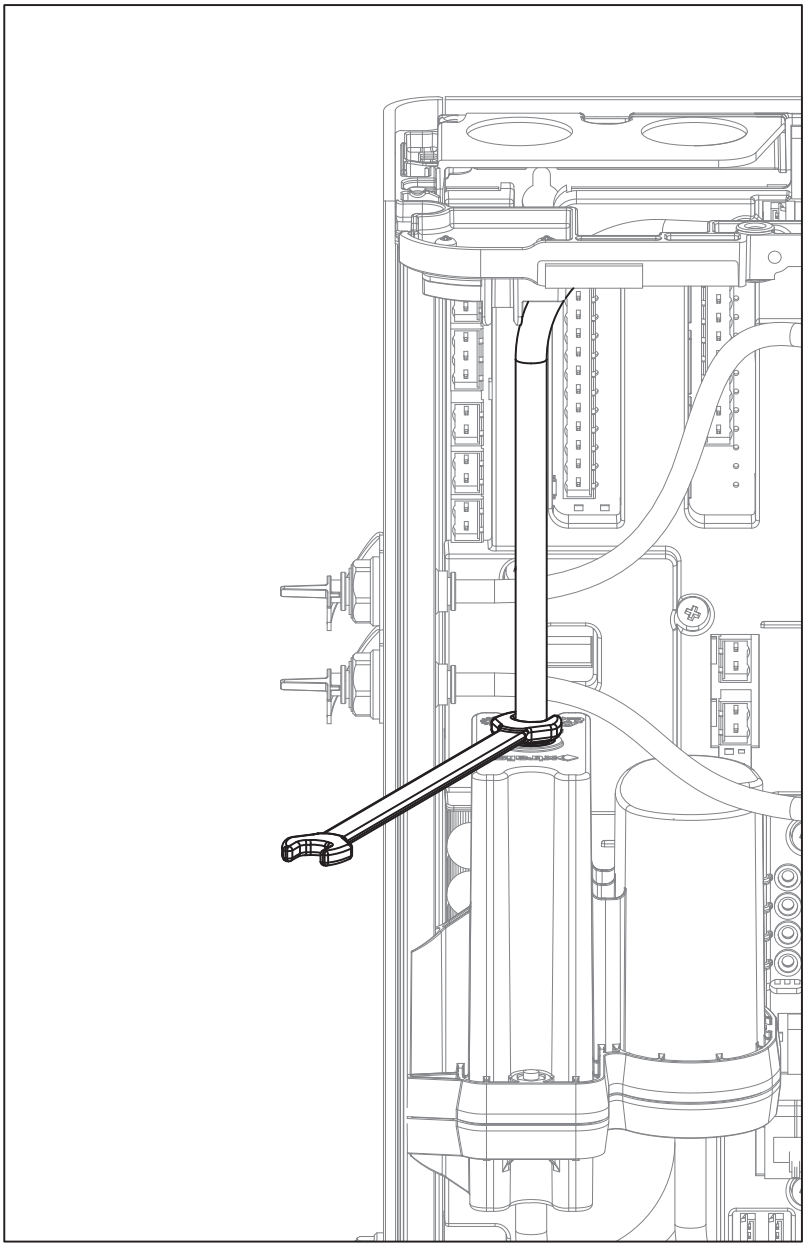

Figure 7-28: Remove the pipe

7. Disconnect the smoke sensor cable (A) (Figure 7-29).

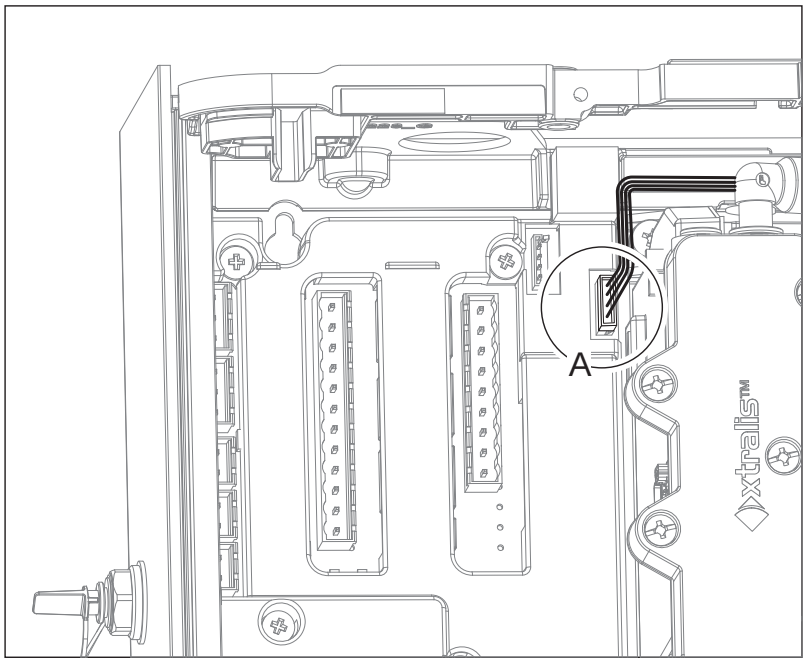

Figure 7-29: Remove the smoke sensor cable

8. Disconnect the pipe (A) at the junction with the Smoke Sensor Module (Figure 7-30).

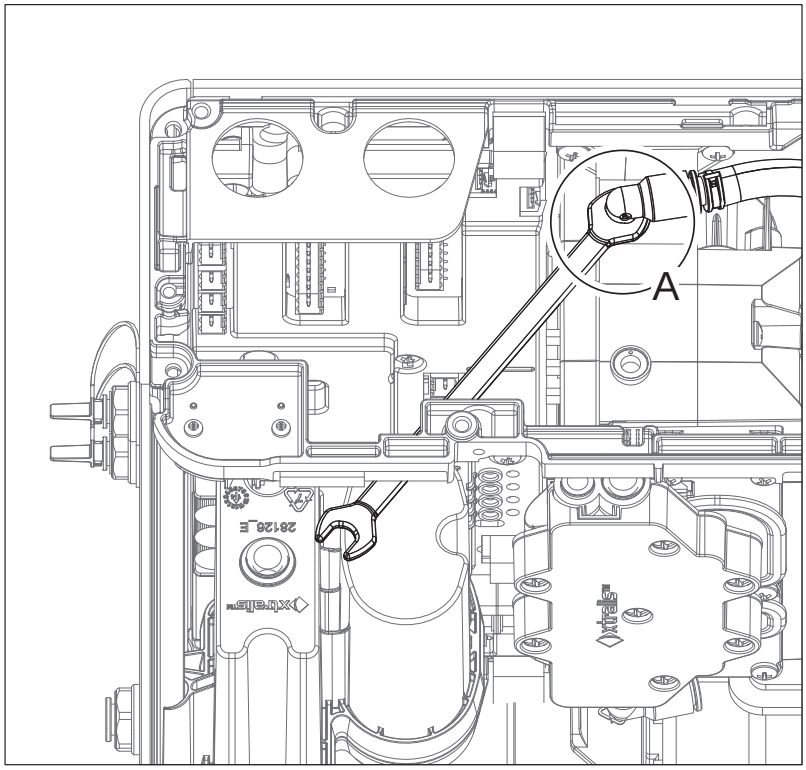

Figure 7-30: Disconnect pipe

9. Remove four Smoke Sensor Module retaining screws (Figure 7-31 and Figure 7-32). Two screws at the top and two screws at the bottom of the module.

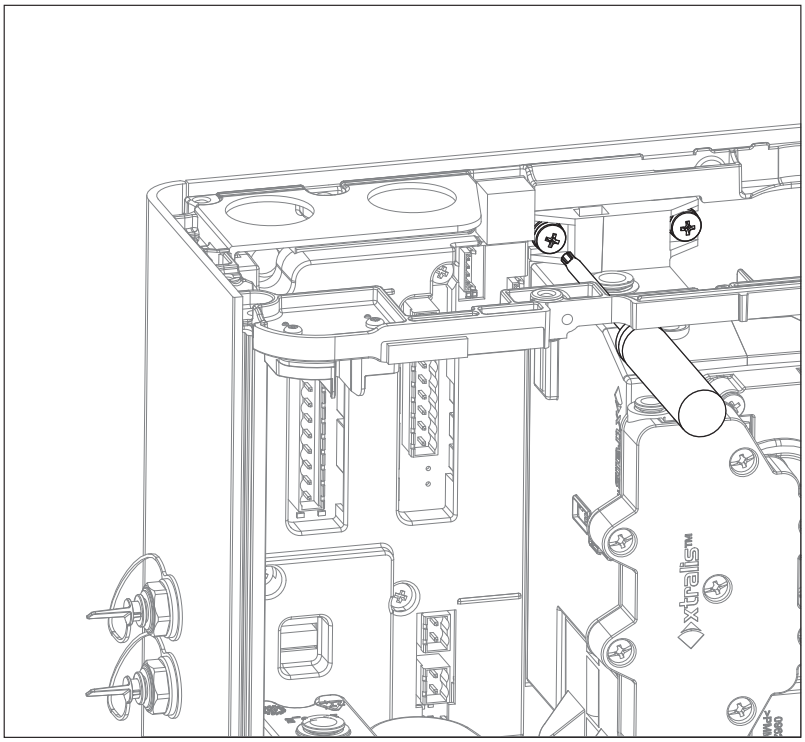

Figure 7-31: Remove Smoke Sensor Module retaining screws

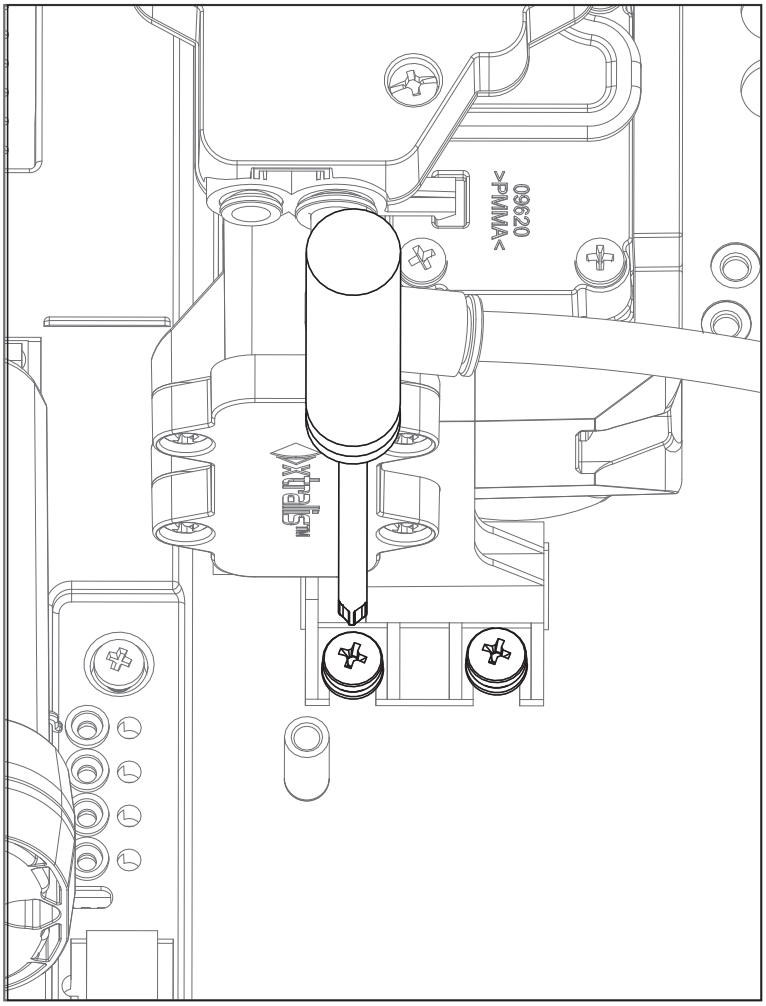

Figure 7-32: Remove Smoke Sensor Module retaining screws

10. Lift out the Smoke Sensor Module (Figure 7-33). Disconnect the two pipes (A and B) from the module.

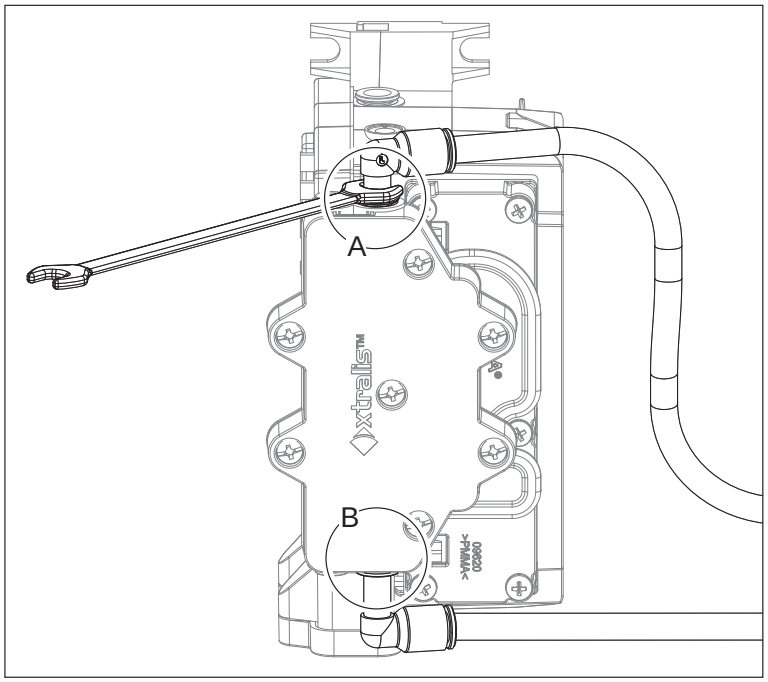

Figure 7-33: Remove Smoke Sensor Module

Replacement

1. Follow the removal procedure in reverse.
2. Perform a system leak test at the end of the process in order to determine that no air leaks have been introduced. Refer to Section 5.4 for further information.

7.8 Spare Parts

Gray-colored internal components such as the Filter, Detection Chamber, Pump and Valve are field-replaceable. Table 7-1 below provides a complete list.

Table 7-1: Spare Parts

Part No.	Description
VSP-970	VESDA-E Mounting Bracket
VSP-971	VESDA-E Smoke Sensor Module
VSP-972	VESDA-E Filter
VSP-973	VESDA-E Pump
VSP-974	VESDA-E Rotary Valve
VSP-975	VESDA-E LED Front Panel

8 Troubleshooting

If the VEA-040-A00-UL detector identifies a fault condition, the Fault LED on the front of the detector illuminates and an event containing details of the condition is written to the active event list.

The Xtralis VSC or iVESDA software can be used to obtain specific information on the event to enable further investigation and correction of the fault. The Xtralis VSC Online Help contains descriptions of each fault and recommended corrective actions.

8.1 Detector Status Information

Alarm Status | Summary Status | Detail Status | Version Info

Field	Value
Network Name	Xtralis
Location	Xtralis
Device Status	Enabled
Trouble Count	7
Active Alarm Status	Alert
Value	32
Current Sensitivity	Enhanced
Print Flow and Pressure	Off
Air Flow Normalizing	Off
Scanning State	Flow Scan
Tube Start / End	Tubes: 3 and 4
Percentage Completed	12.0 %
Flow - Chamber 1	0.00 %
Flow - Chamber 2	133.85 %
Sequence Number	284277
Alert (Current)	25
Action (Current)	63
Fire1 (Current)	100
Fire2 (Current)	200
Service Due Date	
Password Defined	True
WiFi status	Connected to access point
WiFi IP	192.168.33.100
WiFi Gateway	
Ethernet IP	192.168.0.200
Ethernet Gateway	
Protocol	VESDAnet Enhanced
Network Time	5/06/2015 8:40:09 AM

Figure 8-1: Detector Status Information

8.1.1 Scanning State

The Scanning State field in the Detector Status Information dialog (Figure 8-1) provides additional information about the function the detector is currently performing. The following table explains each indicator:

Table 8-1: Scanning State Indicators

Value	Explanation
Unknown	Check for faults.
Monitoring	Monitoring smoke and airflow.
Smoke Scan (Monitoring)	In the Home position, monitoring for smoke while still in Fire1 alarm state. Detector will start another Smoke Scan within 60 seconds.
Smoke Scan	Scanning tubes for smoke

Table 8-1: Scanning State Indicators (continued...)

Value	Explanation
Flow Scan (Monitoring)	In the Home position monitoring for smoke. Detector will continue the current Flow Scan cycle within 60 seconds.
Flow Scan	Scanning a set of tubes for flow faults
Air Flow Normalization (Monitoring)	In the Home position monitoring for smoke. Detector will continue the current Airflow Normalization cycle soon.
Air Flow Normalization	Performing an Air Flow Normalization cycle.
Sampling Point Test (Monitoring)	In the Home position monitoring for smoke and will continue the current Sampling Point Test cycle within 60 seconds.
Sampling Point Test	Performing a user initiated Sampling Point Test cycle
Tube Blow Back (Monitoring)	In the Home position monitoring for smoke and will continue the current Blow Back cycle within 60 seconds.
Tube Blow Back	Performing a user initiated tube Blow Back cycle
System Smoke Test	Performing a user initiated System Smoke Test.
System Alarm Test	Performing a user initiated Alarm Test.
System Leak Test (Monitoring)	In the Home position monitoring for smoke and will continue the current System Leak Test cycle soon.
System Leak Test	Performing a user initiated System Leak Test cycle
Flow Scan (Sampling Point Test)	Performing an automatic Sampling Point Test cycle and once completed a Flow Scan cycle will continue..
Flow Scan (Tube Blow Back)	Performing an automatic Blow Back cycle and once completed a Flow Scan cycle will continue.
Flow Scan (Leak Test)	Performing an automatic System Leak Test cycle and once completed a Flow Scan cycle will continue.

8.2 Fault Reporting through Relays

VESDA-E devices are often interfaced with Fire Alarm Control Panels (FACPs) or building management systems (BMS) via relays. In such instances the fault relays signal a fault condition to the FACP or the BMS. Use the Xtralis VSC software to further investigate the fault.

8.3 Troubleshooting with Xtralis VSC

The Xtralis VSC software displays faults in the active event list as they occur. The list displays the date and time of the fault, the serial number of the device on which the fault has occurred, the zone number, fault number, and a description of the fault.

The fault is removed from the active event list once it is cleared.

A StaX Modules

A.1 Local Relay StaX

The VESDA-E Local Relay StaX allows signaling of alarm location from the detector via relays as secondary reporting information and provides mounting of fire panel loop input modules inside the enclosure. It is mandatory to connect Fire 1 relay wiring to the FACP for primary alarm reporting.

Figure A-1: VESDA-E Local Relay StaX

A.1.1 Features

- 40 relays.
- Each relay responds to a smoke event located on one tube of the detector.
- Provides for mounting of loop modules inside enclosure.
- IP 40 enclosure (not UL tested).
- Easy mounting with optional steel support bracket.

A.1.2 Package Contents

The Local Relay StaX is shipped with the following components:

- 1 Local Relay StaX enclosure
- 1 mounting bracket
- 1 mounting spacer
- 1 mounting template
- 1 installation instruction sheet

A.1.3 Device Components

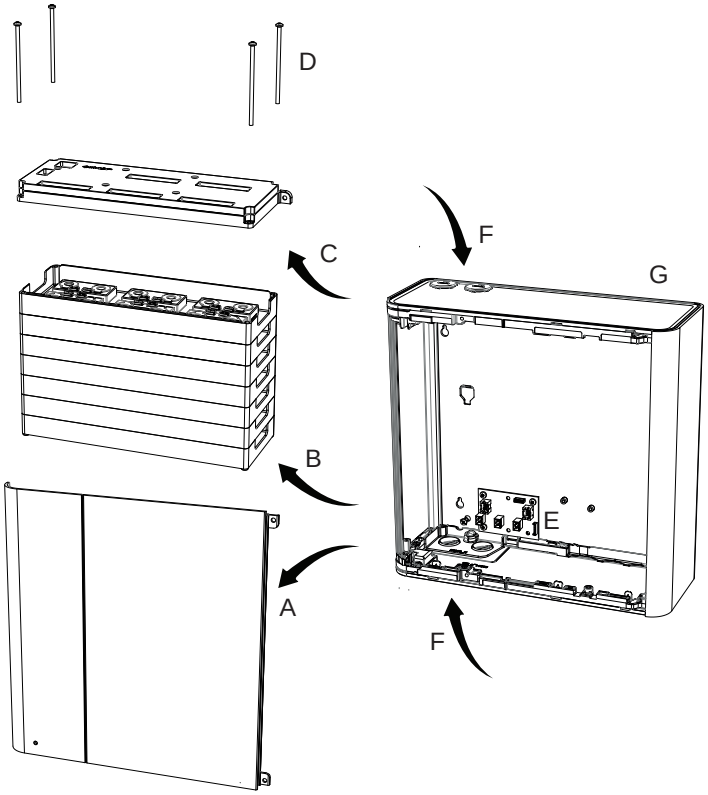

Legend	
A	Fascia
B	Trays
C	Relay PCA
D	Fixing Screws
E	Distribution Board
F	Cabling Inlets
G	Base

Figure A-2: Local Relay StaX Device Components

A.1.4 How the Local Relay StaX works

When the VESDA-E VEA-040-A00-UL detector detects an alarm it then scans to determine which tubes have smoke present. The Local Relay StaX will turn on the relays corresponding to each pipe for which smoke has been found.

- **Relay Mapping:** Relays 1 to 40 correspond to tubes 1 to 40 for the detector, or Expansion Module 1 or 2.
- **Latching:** The Local Relay StaX relay latching will follow the detectors Alarm latching configuration.

A.1.5 Specifications

Table A-1: Local Relay StaX Specifications

Specification	Value
Supply Voltage	18 to 30 VDC (24 VDC Nominal)
Power Consumption @24 VDC	• **Quiescent:** 0.5 W • **In Alarm:** 6 W
Dimensions (WHD)	13.9in x 13.4in x 5.3in (352.05 mm x 340.5 mm x 135.5 mm)
Weight	11.22 lbs (5.1 kg)
Operating Conditions Please consult your Xtralis representative for information on operation outside these parameters or where sampled air is continually above 0.015% obs/ft (0.05% obs/m) under normal operating conditions.	**Temperature:** • **Tested to:** 32°F to 120°F (0°C to 49°C)* • **Ambient:** 32°F to 102°F (0°C to 39°C) **Humidity:** • 5-95% RH, non-condensing

Table A-1: Local Relay StaX Specifications (continued...)

Specification	Value
Storage Conditions (Non-operational)	• **Humidity:** Dry (<95%) • **Temperature:** 0° to 85°C • Must not be exposed to sunlight or other radiation sources
Relays	• 40 relays • Contacts rated 2A @ 30 VDC (Resistive) • Programmable to latch or not latch
IP Rating	IP 40 (not UL tested)
Mounting	Upright position on a solid surface with steel support bracket or directly to mounting surface.
Cable Access	4 x 1 in (25 mm) cable entry ports
Cable Termination	Screw terminal blocks (0.2-1.5 sq mm, 24-16 AWG) **Note:** Use 18 AWG (1.1 mm²) or larger wire diameter for power connections.

* Product UL Listed between 32°F to 102°F (0°C to 39°C)

A.1.6 Dimensions

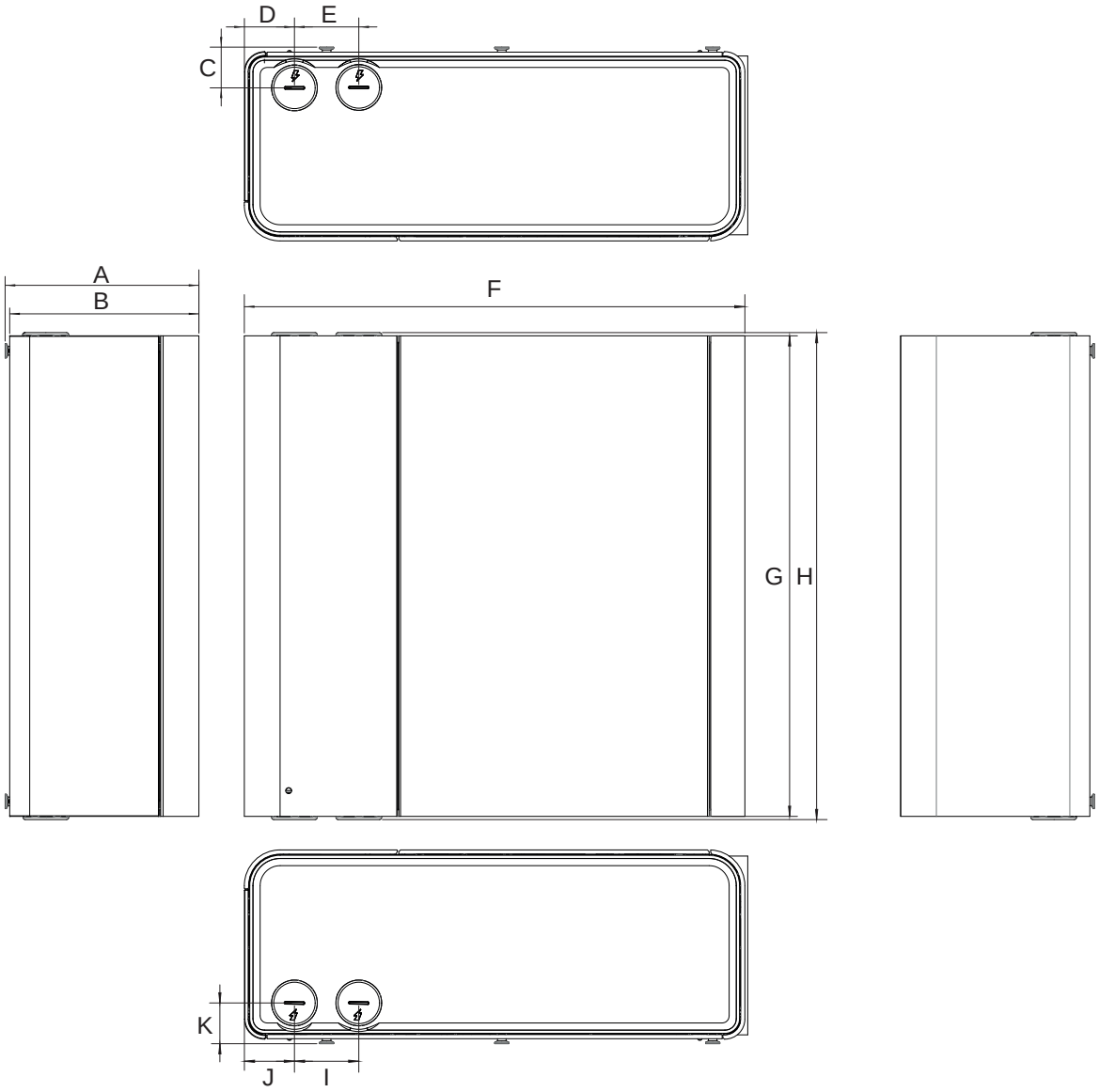

	mm	inch
A	135.5	5.3
B	132.3	5.2
C	28.5	1.1
D	35.0	1.4
E	45.0	1.8
F	350.05	13.8
G	336.0	13.2
H	340.5	13.4
I	45.0	1.8
J	35.0	1.4
K	28.5	1.1

Figure A-3: Front dimensions

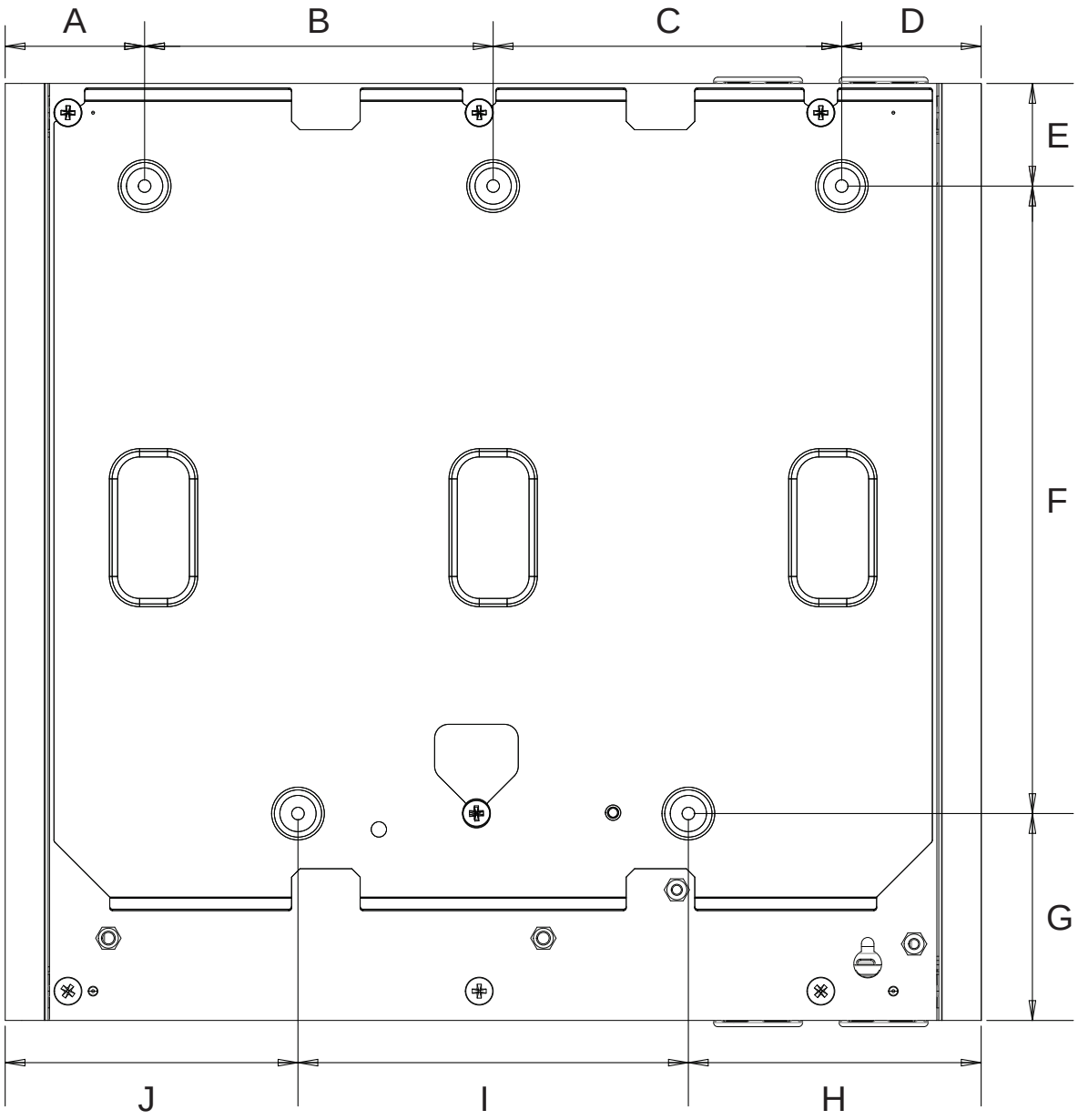

	mm	inch
A	50.0	2.0
B	125.0	4.9
C	125.0	4.9
D	50.0	2.0
E	36.8	1.4
F	225.0	8.9
G	74.2	2.9
H	105.0	4.1
I	140.0	5.5
J	105.0	4.1

Figure A-4: Rear dimensions - Wall Bracket

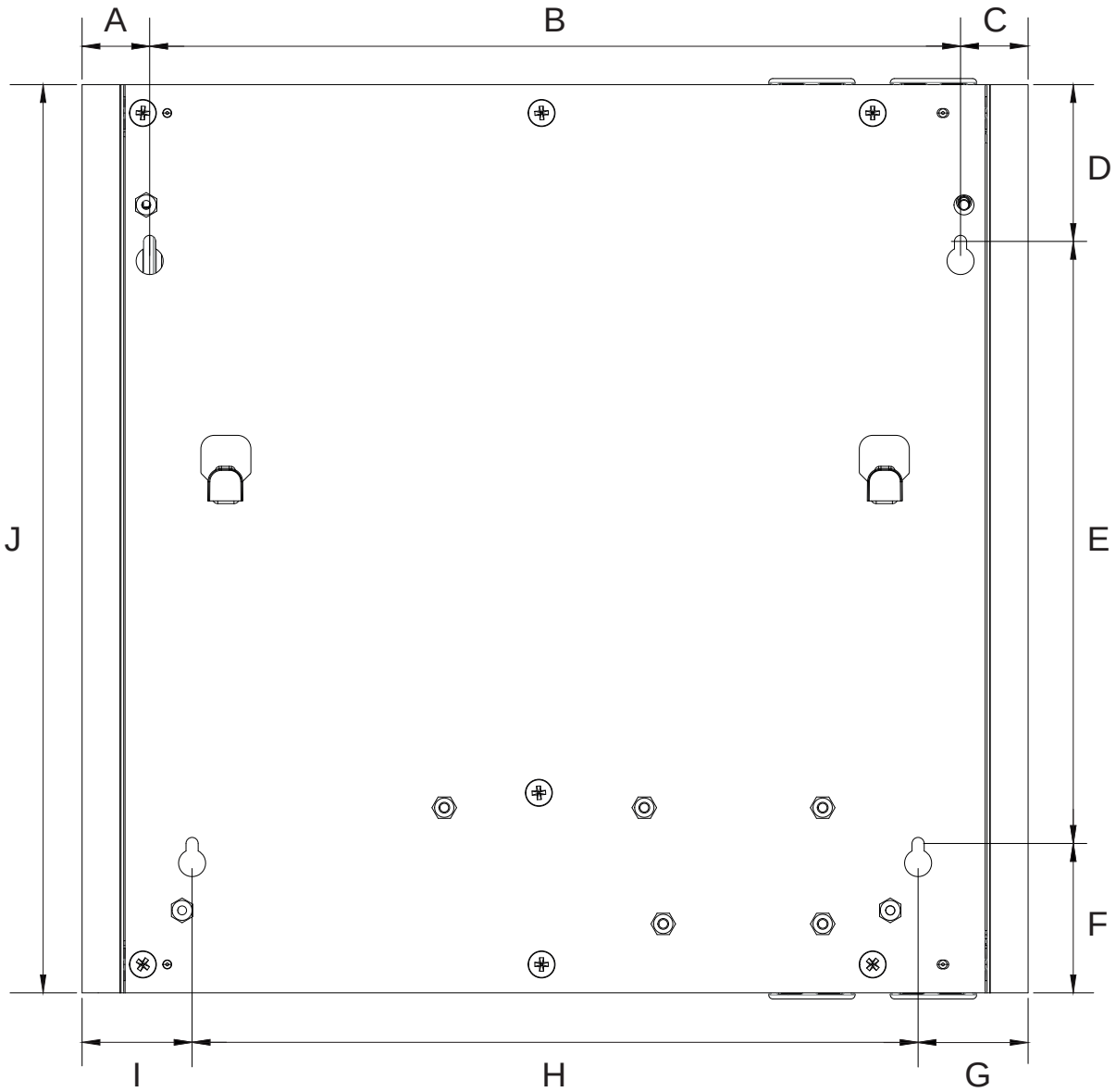

	mm	inch
A	25.0	0.98
B	300.0	11.81
C	25.0	0.98
D	58.0	2.28
E	222.75	8.77
F	55.25	2.18
G	40.70	1.60
H	286.6	10.57
I	40.7	1.6
J	336.0	13.23

Figure A-5: Rear dimensions - Direct Mounting

A.1.7 Installation Requirements

Prerequisites

- A completed system design.
- A 24V DC Power Supply, compliant with local codes and standards. The supply may also power the detector.
- Screws and inserts that are appropriate for the mounting surface.
- Cable glands that are compliant with the IP rating of the enclosure.
- Conduit, as specified in the system design.
- 0.2 mm² to 1.5 mm² (24 -16 AWG) wiring for relays.
- A PC or laptop installed with Xtralis VSC for initial configuration.

A.1.8 Mounting the Local Relay StaX using the Mounting Bracket

The Local Relay StaX can be mounted above or below the detector. A spacer has been provided to precisely align the Local Relay StaX mounting bracket with the detector mounting bracket.

For general mounting position guidelines, refer to Section 4.2 on page 23.

Mounting Procedure

1. Position the mounting bracket spacer (A) immediately above or below the detector mounting bracket (B), which has been previously secured to the mounting surface. If required, remove the detector first.

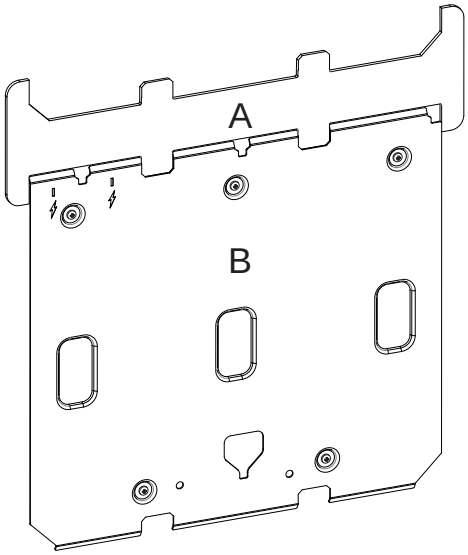

Figure A-6: Position the Mounting Bracket Spacer above or below the detector mounting bracket

2. Align the Local Relay StaX Mounting Bracket (C) with the spacer (B), and secure it to the mounting surface (Figure A-7), then remove the spacer.

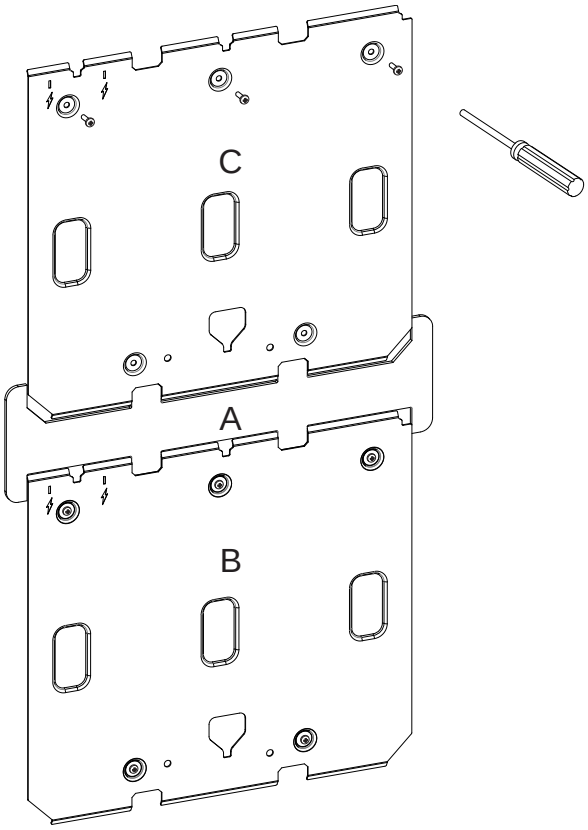

Figure A-7: Position and secure the Local Relay StaX Mounting Bracket

3. Attach and secure the Detector to its mounting bracket. Refer to Section 4.2.2 on page 25 for further information.
4. Fit the Local Relay StaX to its mounting bracket by aligning the four mounting studs to their respective recesses and sliding the unit into place (Figure A-8). The top of the unit should be aligned with the top of the mounting bracket.

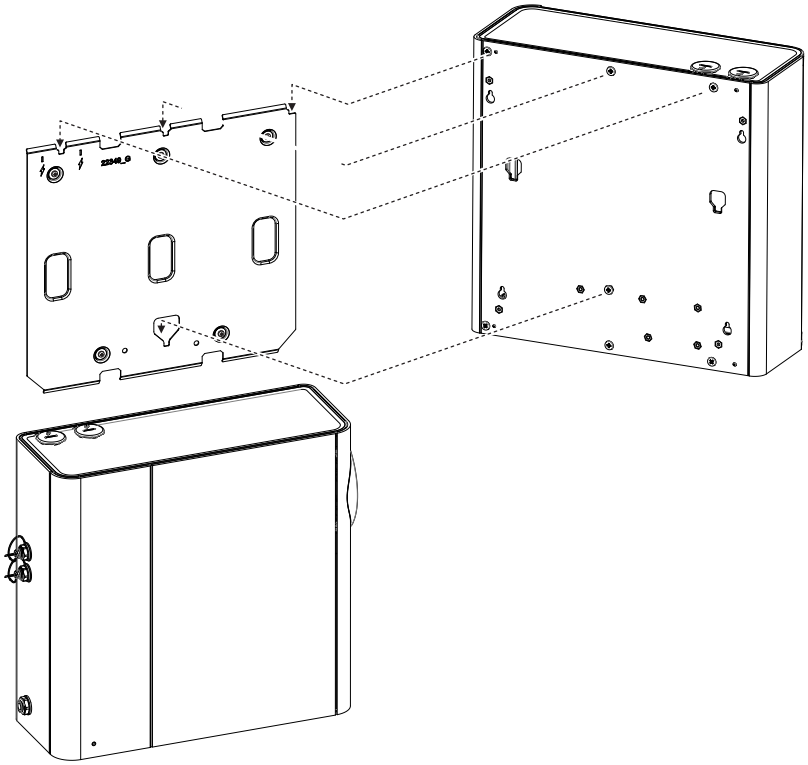

Figure A-8: Fit the Local Relay StaX to its mounting bracket

5. Secure the Local Relay StaX to its mounting bracket by removing the yellow tape covering the partially inserted locking screw and then tightening the locking screw. (Figure A-9).

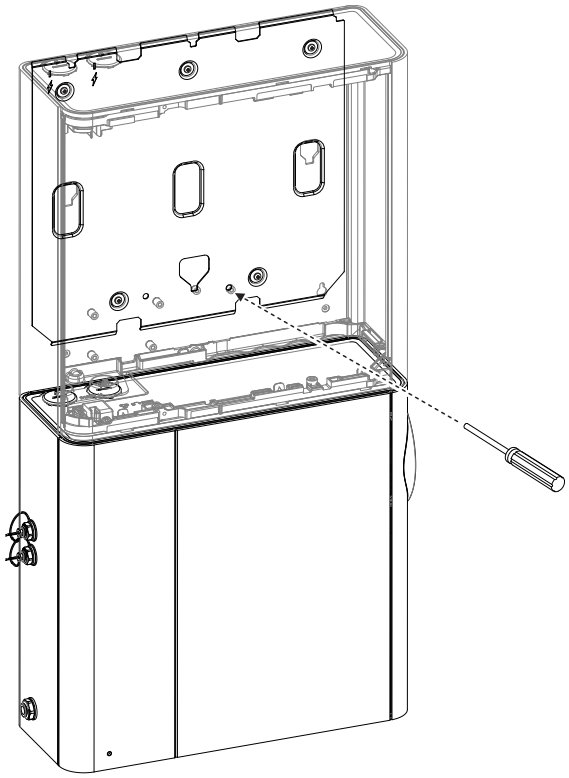

Figure A-9: Secure the Local Relay StaX to its mounting bracket

A.1.9 Mounting the Local Relay StaX directly to the Mounting Surface

The Local Relay StaX can be mounted immediately above or below the detector. A spacer has been provided to assist with positioning the Local Relay StaX in relation to the detector.

For general mounting position guidelines, refer to Section 4.2 on page 23.

Mounting Procedure

1. Remove the door and fascia from the Local Relay StaX.
2. Place the mounting bracket spacer flat on top of the detector (Figure A-10).

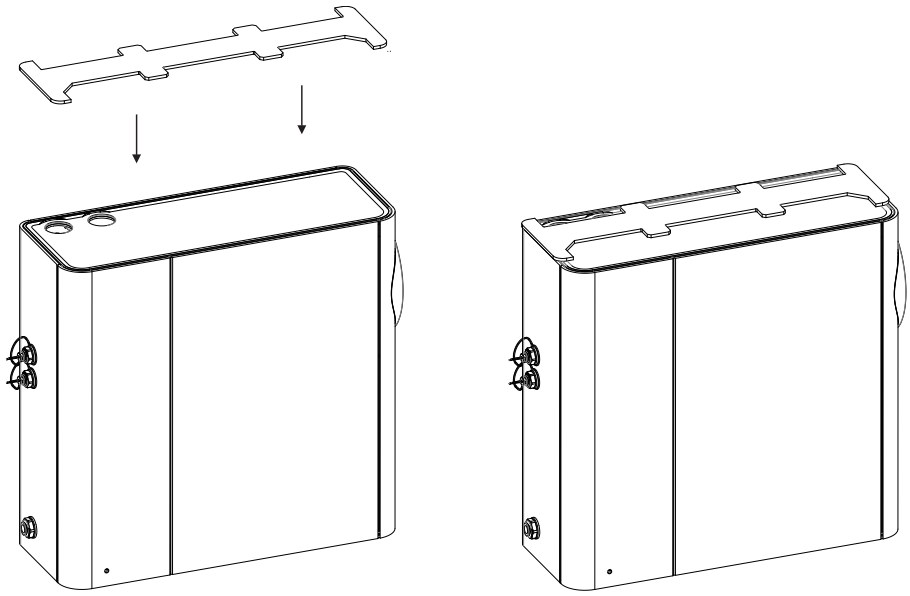

Figure A-10: Place the Mounting Bracket spacer on top of the detector

3. Place the Local Relay StaX on top of the detector. Mark positions for four pilot holes on the mounting surface through keyholes in the back of the Local Relay StaX.

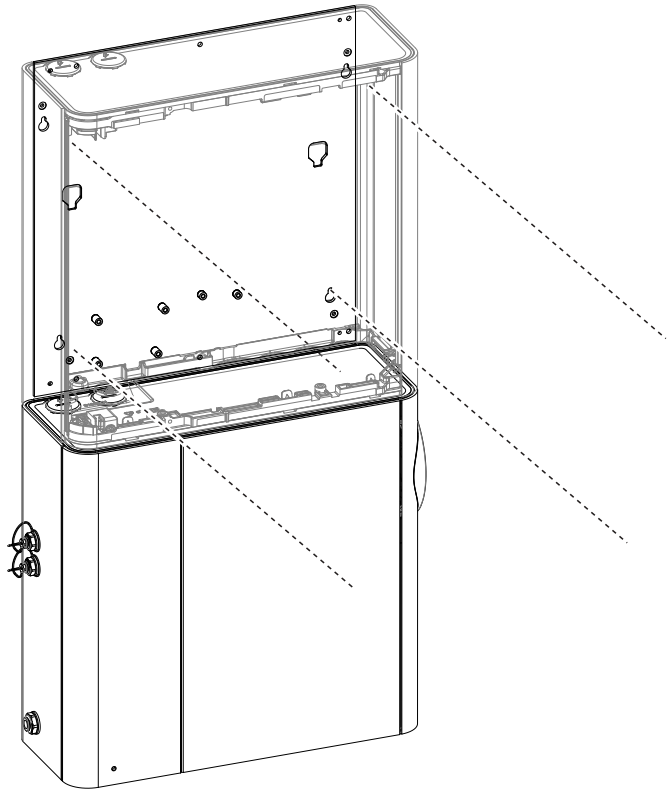

Figure A-11: Position mounting template

4. Remove the Local Relay StaX and mounting bracket spacer from above the detector. Insert two M4 button head screws in the upper two pilot holes and tighten until the screw head is protruding 7 mm from the wall (Figure A-12).

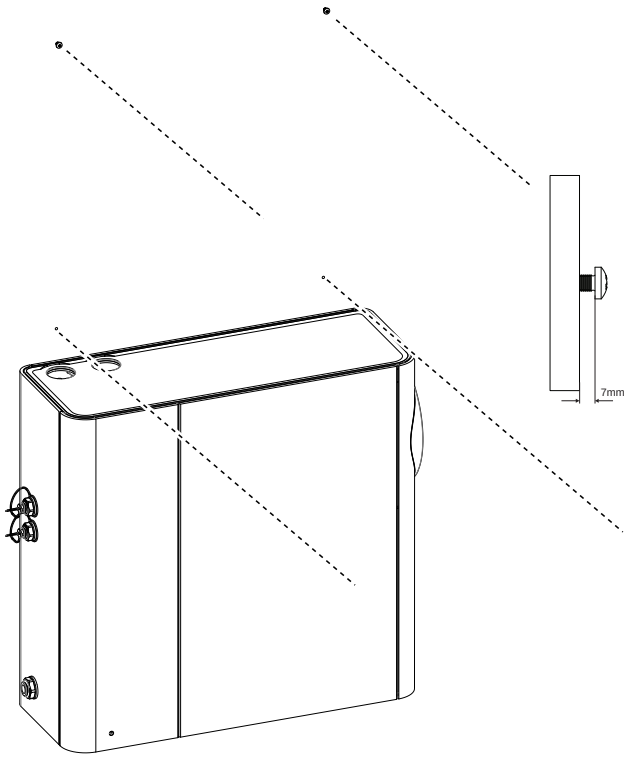

Figure A-12: Insert mounting screws

5. Reposition the Local Relay StaX above the detector, inserting the two mounting screws into their respective keyholes (Figure A-13).

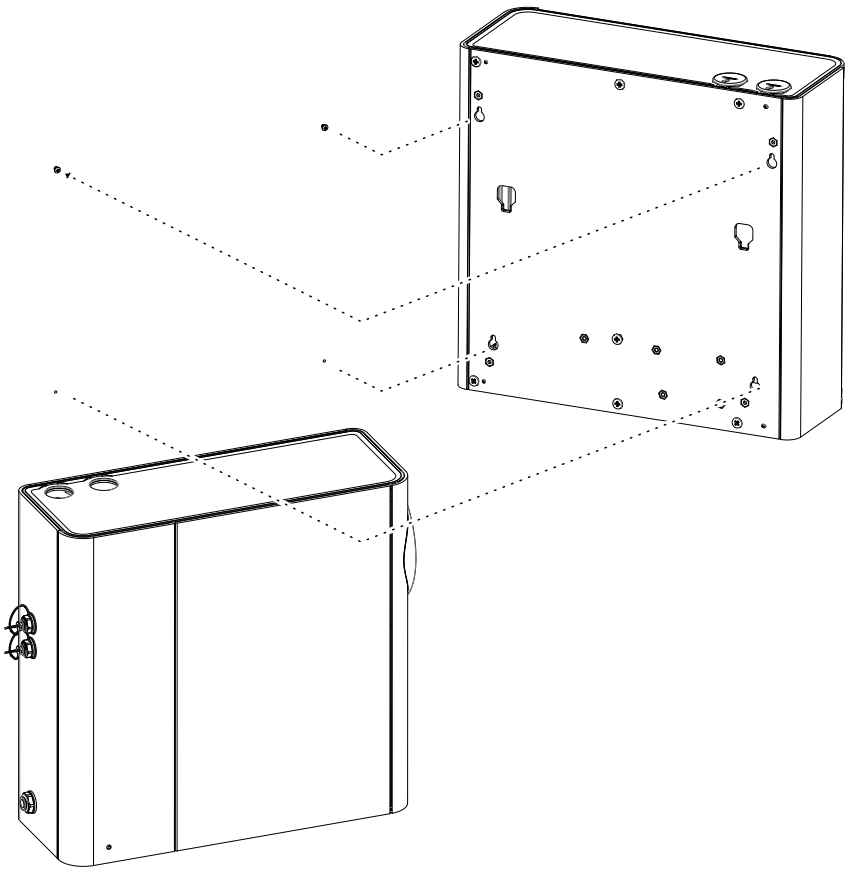

Figure A-13: Reposition the Local Relay StaX above the detector

6. Insert the third and fourth mounting screw and tighten all four (Figure A-14).

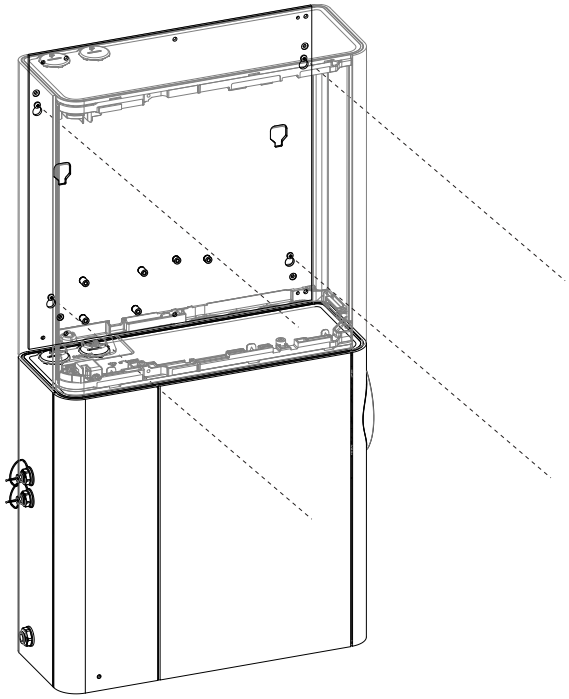

Figure A-14: Tighten Mounting Screws

A.1.10 Wiring

Note: Refer to Section 4.3.12 for further information on system connectivity.

Internal Wiring

The Local Relay StaX Relay PCA provides external connection points for the Relays.

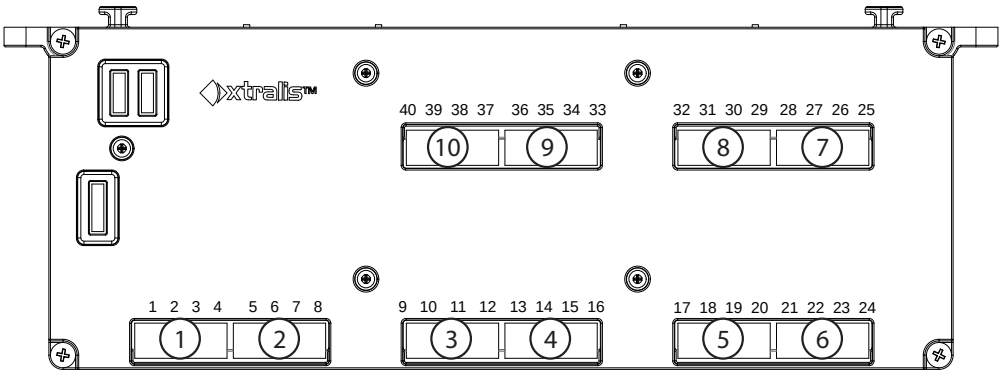

Figure A-15: Local Relay StaX Relay PCA

System Wiring

See Figure A-16 for instructions for wiring the Local relay StaX to the VEA Detector.

- **Data:** Connect from the DATA connector (C) on the detector to any DATA connector (C) on the Local Relay StaX Distribution PCA. (See Figure A-16).
- **Power:** Connect from the EXP PWR connector (B) in the detector to the PWR IN connector (A) in the Local Relay StaX.

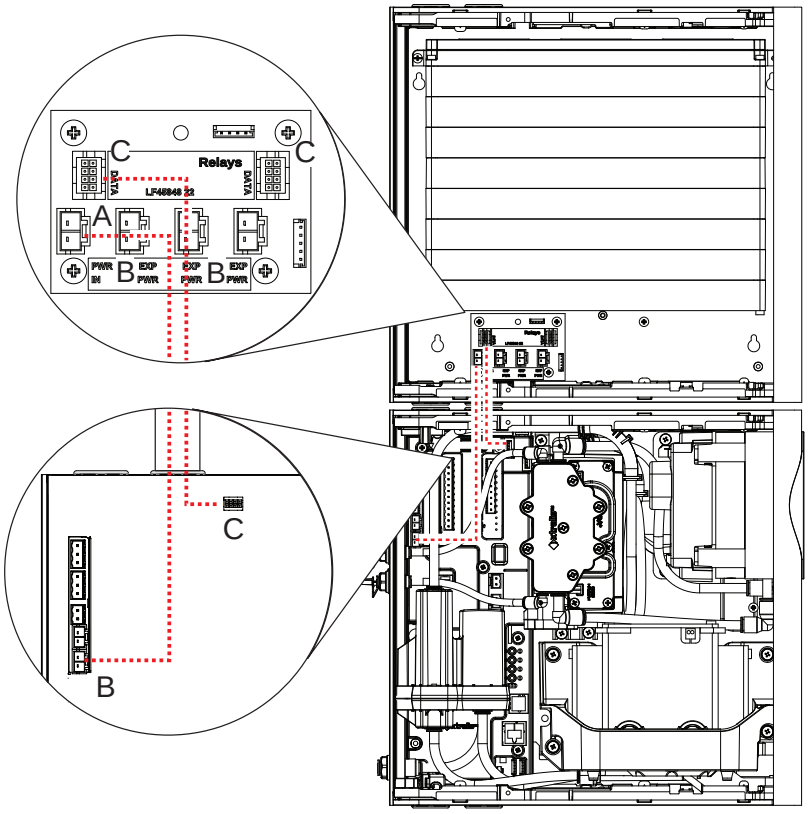

Legend	
A	PWR IN
B	EXP PWR
C	DATA

Figure A-16: Power and Data Wiring

Typical Wiring to Addressable Input Modules

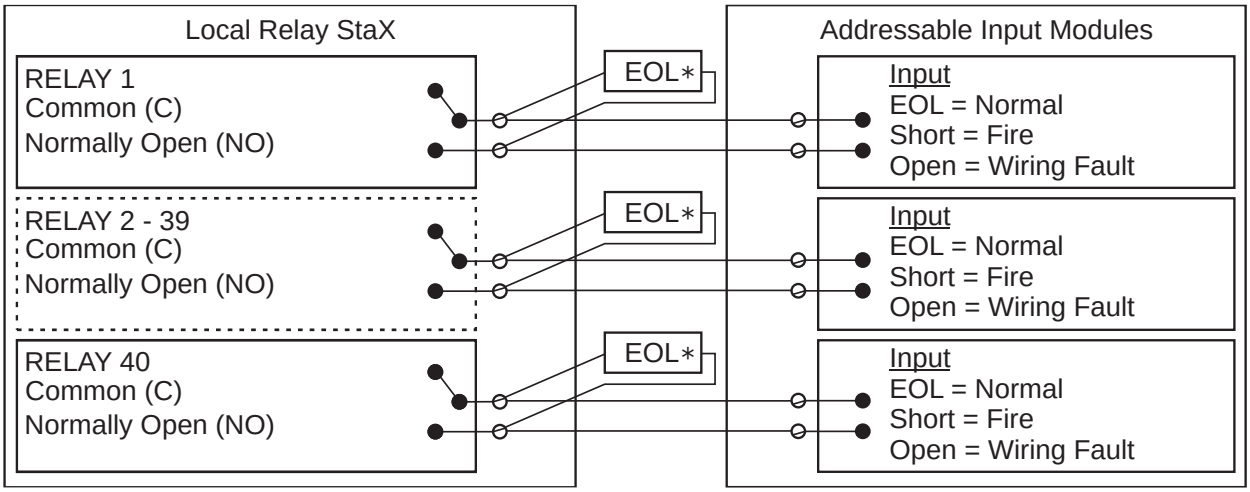

∗EOL: End of Line Resistor

Figure A-17: Typical Wiring to Addressable Input Modules

Note: UL Listed addressable input modules can be connected to the VEA-040-A00-UL relays, as shown in Figure 4-20 on page 36, for primary reporting of a fire alarm. The relay outputs of the Local Relay StaX (VER-A40-40-STX) provide secondary address information, identifying which tubes of the associated detector generated the alarm condition. UL listed addressable input modules can be connected to the relay outputs of the Local Relay StaX as shown in Figure A-17.

A.1.11 Mounting the Relay Trays inside the enclosure

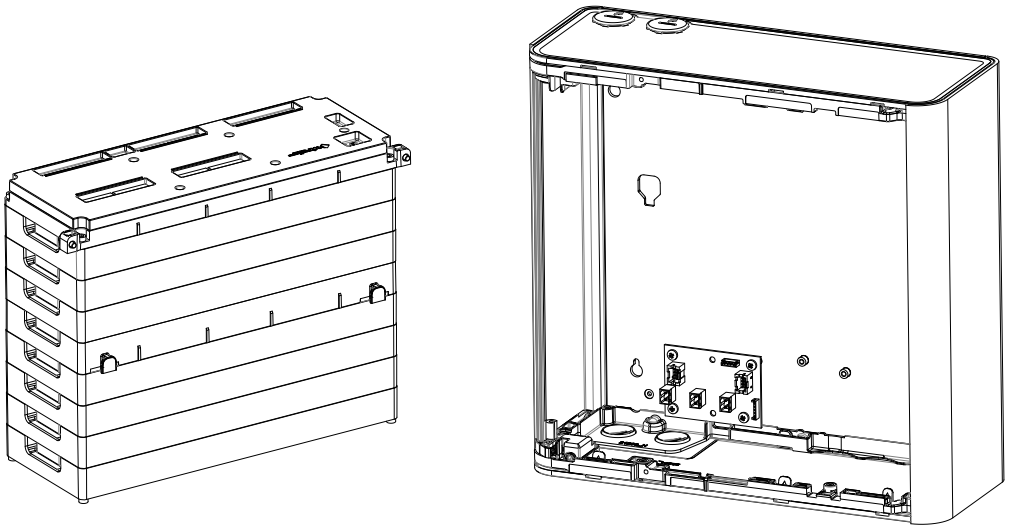

Figure A-18: Insert Trays into the enclosure

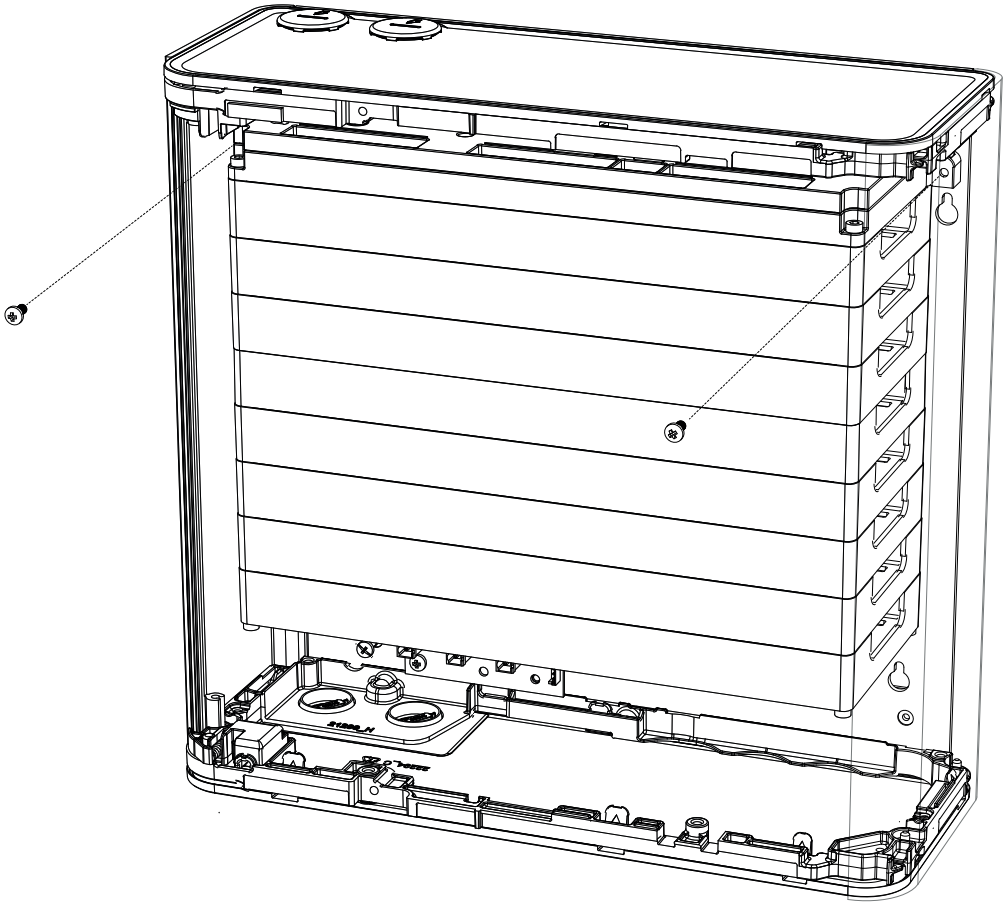

Figure A-19: Secure Trays to the enclosure

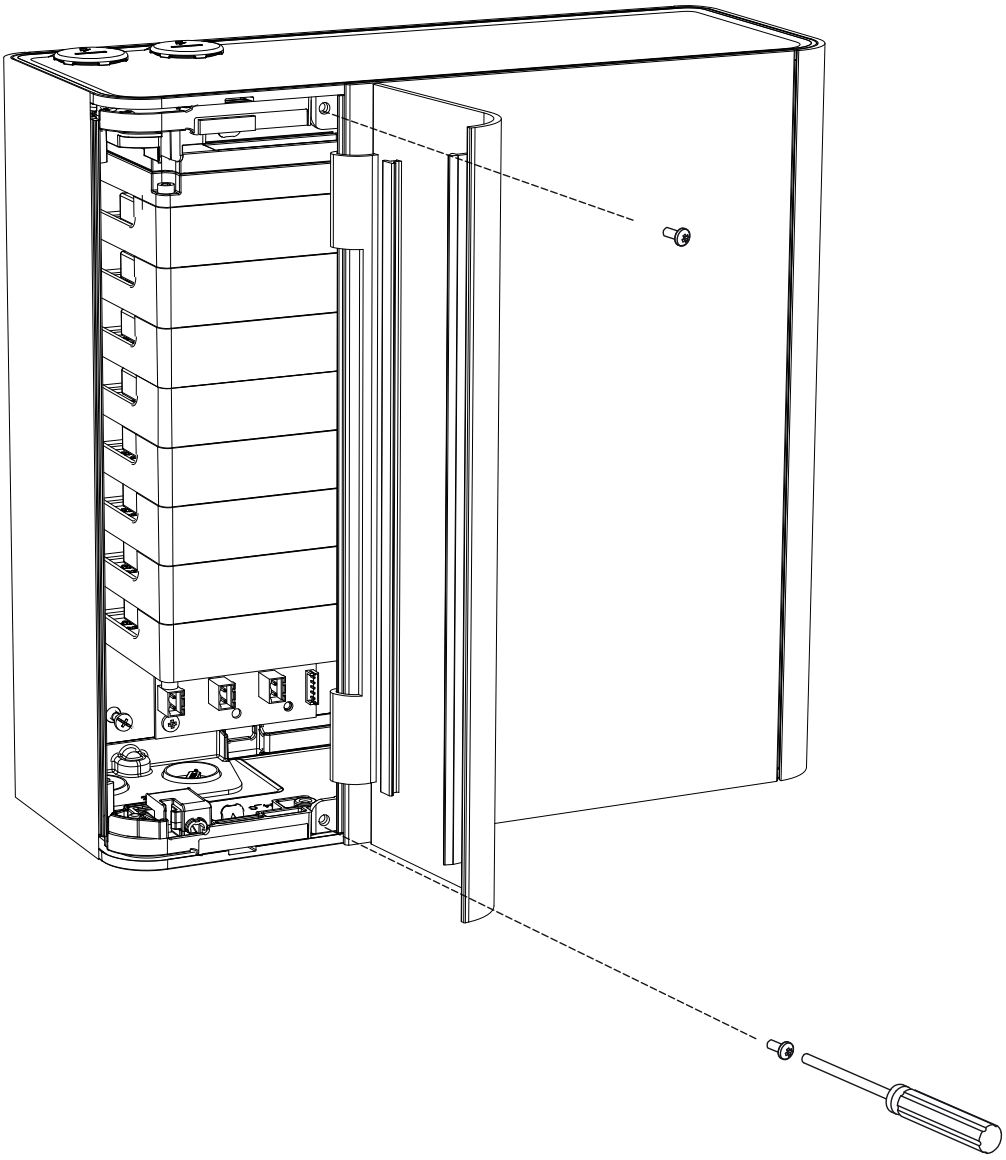

Figure A-20: Attach the Fascia

A.1.12 Configuration

Local Relay StaX

The relay PCA itself must be configured to signal smoke locations for the VEA-040-A00-UL detector.

There are two jumpers. Refer to Figure A-21 below.

Both jumpers are removed to use the Relay StaX with the detector.

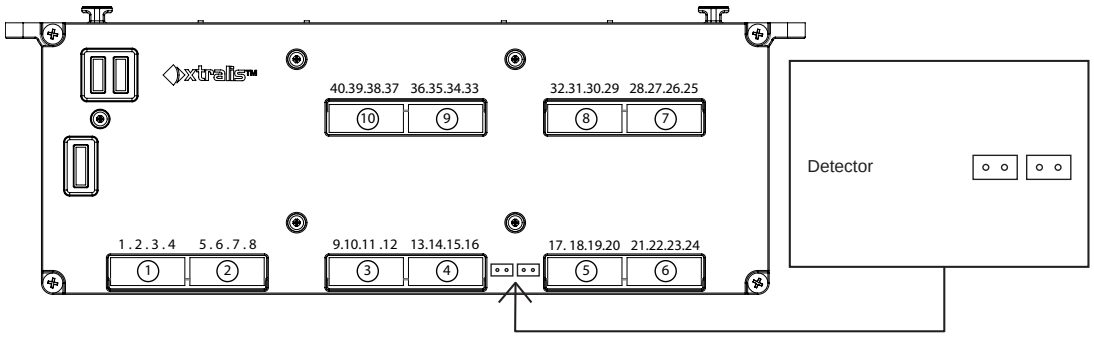

Figure A-21: Relay PCA Configuration Jumpers

Detector

The VESDA-E VEA-040-A00-UL detector must be configured to expect a connected relay module.

This is done by ticking a check box in the Relay column on the Module tab in Xtralis VSC. Refer to Section 5.5.5 for further information.

The example below tells the system to expect a relay module to be present for the detector.

Note: If the Relay Module is configured but not connected, a fault will be generated.

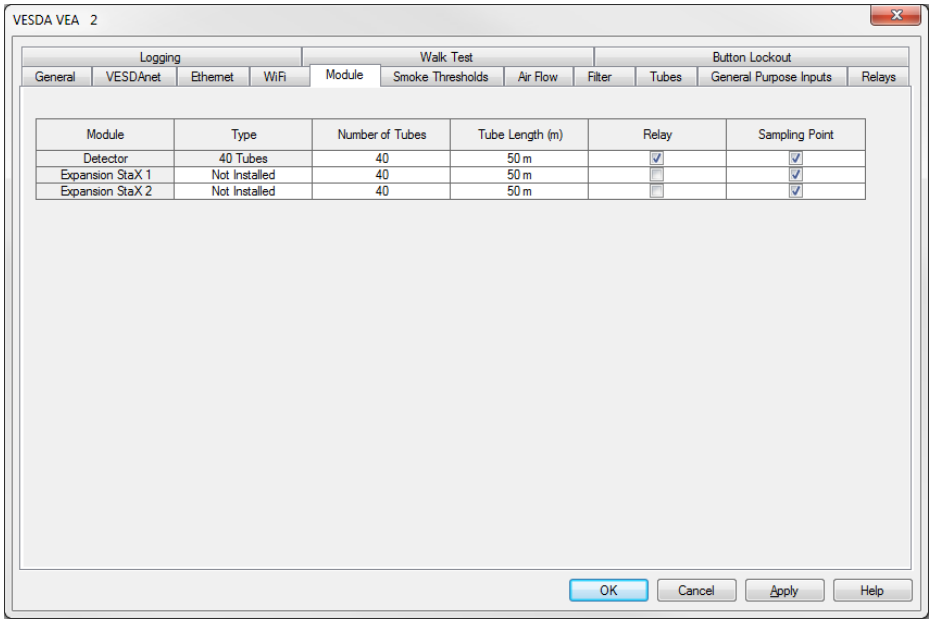

Figure A-22: Relay Module enabled in Xtralis VSC

A.1.13 Commissioning

To test the relays, use the Alarm Test function in Xtralis VSC.

Select the Alarm Test command in the Device Menu.

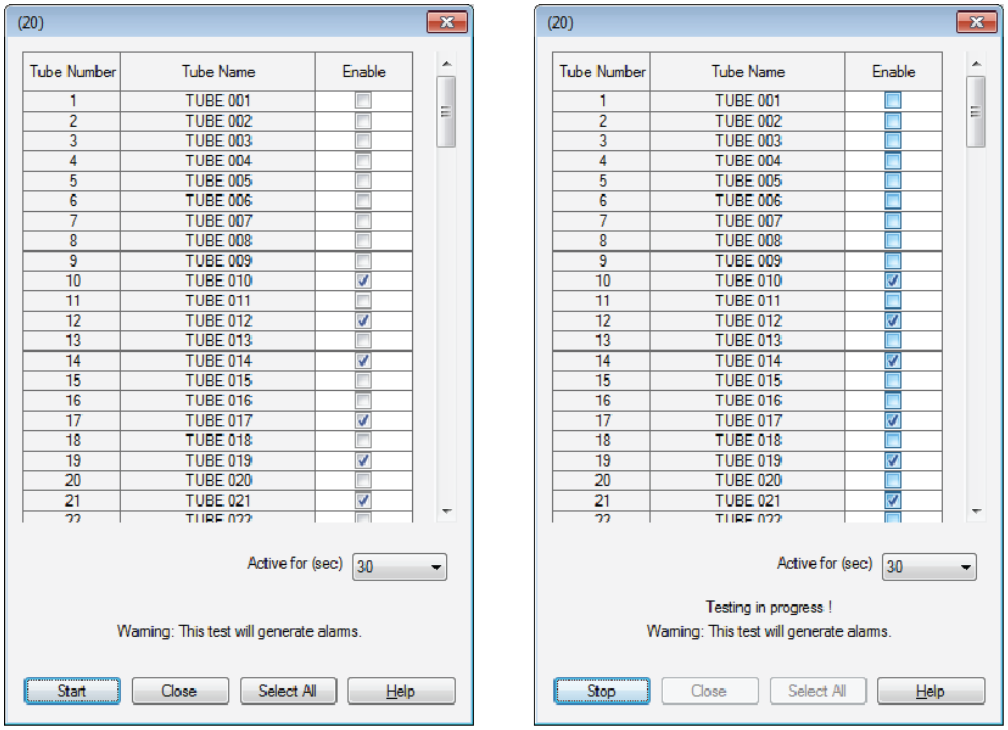

Figure A-23: Relay Testing

Select the relays to be tested and press “Start”. The detector will stop normal smoke detection and will go into alarm with the selected relays turned on. (The main detector Alarm relays will also be turned on.) The alarm test function will stop automatically after the selected “Active for” time. Or the user can stop the function by selecting “Stop”.

Note: This function will cause an alarm to be signaled via the relays in the Local Relay StaX and the detector’s relays.

This page is intentionally left blank.

B Glossary

Table B-1: Glossary

	Term	Description
A	Aspirator	Impeller type fan used to draw sampled air into the detector.
C	Commissioning	The process of making a smoke detection system operational.
	Condition	For example, Fire 1 condition, Urgent Fault condition. The detector is said to be in the Fire 1 condition when it has detected a Fire 1 alarm.
D	Disable	When the detector is disabled the detector will not signal alarms and faults via its relays. The detector signals that it is disabled using Relay 1. (Disable was previously referred to as isolate.)
E	Event Log	A data log of events (for example, alarms, troubles, user commands) which is stored in the detector.
F	Fault	An urgent fault is a condition where the system requires urgent attention as it may be unable to detect an alarm condition. A minor fault is a condition where the system requires attention or maintenance, but is still able to detect an alarm condition.
	Fire Alarm Control Panel (FACP)	A central monitoring and control system to which all smoke detectors report their status.
G	General Purpose Input (GPI) Unmonitored	An input to the detector which can be used to initiate a user configurable action. Applying a voltage between 5V and 30VDC triggers the selected action.
	General Purpose Input (GPI) Monitored	The monitored GPI senses contact closure and is configurable to initiate the same actions as the unmonitored GPI. In particular, it can be used to monitor the power supply.
H	High Airflow Environment	Where there are 10 or more air exchanges per hour.
	High Level Interface (HLI)	A communications interface between a VESDA device and other pieces of equipment using another communications protocol.
L	Latching	If the cause of a condition is removed (for example, smoke decreases below the threshold) and latching is enabled, the detector “remembers” the condition and holds the corresponding relays and displays in the active state as though the cause of the condition were still active.
O	Obscuration	The reduction in light transmission per meter or per foot due to the presence of particulates.
R	Relay	A device on a detector that has an electrical contact which can be configured to close when a condition occurs such as fire alarm or a fault in the detector. This is the primary method used to signal alarms and faults.

Table B-1: Glossary (continued...)

	Term	Description
S	Sampling Network	The tube network constructed to allow the VESDA-E detector to draw air for sampling.
	Sensitivity	Sensitivity refers to sensitivity to smoke. A high sensitivity denotes response to a lower concentration of smoke than a low sensitivity.
	Standby	When the detector is in standby mode the air pump is turned off and the detector will not signal alarms via its relays. The detector signals that it is in Standby mode using Relay 1.
Z	Zone	A defined area within the protected premises from which an alarm signal can be received.

www.xtralis.com
Doc. No. 36402_A1
Part No. AD36402-000
April 2021

All technical data is correct at the time of publication and is subject to changes without notice. All Intellectual Property including but not limited to trademarks, copyrights, patent are hereby acknowledged. You agree not to copy, communicate to the public, adapt, distribute, transfer, sell, modify or publish any contents of this document without the express prior written consent of Xtralis. Installation information: In order to ensure full functionality, refer to the installation instructions as supplied. © Xtralis