Honeywell

Honeywell Connected Life Safety Services
CLSS Gateway

HON-CGW-MBB

Installation and Users' Manual

P/N:LS10248-000HW-E | REV. H | JAN./09/2023
ECN: 00026306

Table of Contents

Section 1: General Information **9**
1.1: About This Manual 9
1.2: Information Sources 9
1.2.1: Training Modules 9
1.2.2: Related Documents 10
1.3: Documentation Feedback 12
1.4: Abbreviations Used 13
1.5: Approvals 14
1.6: Warnings and Cautions in This Manual 15
1.7: The Product Standards 15
1.8: Disclaimer 15
Section 2: Overview **16**
2.1: Operation 16
2.2: Honeywell Connected Life Safety Services 16
2.3: Gateway Board Layout 16
2.3.1: Connecting Interfaces 17
2.3.2: LED Indicators 18
2.3.3: Switches on the Gateway Board 20
2.4: CLSS Gateway Parts 20
Section 3: Security Recommendations **21**
3.1: For Users 21
3.2: For Preventing Potential Risks 21
3.2.1: Unauthorized Access 21
User Access and Passwords 21
3.2.2: Memory Media 21
3.2.3: Software and Firmware Updates 22
3.2.4: Viruses and Other Malicious Software Agents 22
3.2.5: Network and Firewall Setup 22
Best Practices: Network Security 23
Best Practices: Connected Devices 23
3.2.6: Securing the Monitoring Stations 23
Section 4: Installation **25**
4.1: Wall Mounting the Fixed Gateway 25
4.2: Mounting the Portable Gateway 27
4.2.1: Mounting onto the Chassis 27
4.3: Gateway Board Connection Options 28
4.3.1: Connecting to a Fire Alarm Panel 30
4.3.2: Installing a Cellular Module 30
Compatibility Requirements 30
Before Installing a Cellular Module 30
Precautions for Service Quality 30
To Install a Cellular Module 30
Replacing the SIM Card 31
4.3.3: Installing the External Aerials 32
To Install an External Antenna 32
Section 5: Configurations **33**
5.1: Commissioning the Gateway 33
5.1.1: The Commissioning Steps 33
5.1.2: Exporting Panel's Topology Data 33
To Export the Topology Data 33

5.1.3: To Configure via the Wireless Connection ... 33
5.2: Verifying the Gateway Connections ... 36
5.3: Panel Brand and Connection Settings ... 37
5.3.1: To Change the Connection Settings ... 37
5.3.2: Importing the Gent Panel's Inventory ... 38
5.3.3: To Configure the Panel's Connection Settings ... 39
5.4: Honeywell CLSS Alarm Transmission Services ... 40
Communication Management ... 40
5.4.1: Central Station Communication ... 40
5.4.2: Activating the Central Station Communication ... 41
Adding a Central Station to the CLSS Account ... 41
Install a Fixed Gateway at the Site ... 41
Configuring the Central Station Communication ... 41
Verifying the Central Station Communication Configurations ... 42
5.4.3: Dual Path Communication for Alarm Transmission ... 43
Supervision Period ... 43
Transmission Options ... 43
Test Time Interval ... 43
Event Exclusion ... 45
Section 6: Post-Installation Activities ... 46
6.1: Upgrading the Gateway Firmware ... 46
6.1.1: To Upgrade Before Commissioning the Gateway ... 46
6.1.2: To Upgrade After Commissioning the Gateway ... 47
6.1.3: To Locally Upgrade with a PC ... 48
6.1.4: To Verify the Upgrade ... 48
6.1.5: LED Indications During the Upgrade ... 48
6.2: Troubleshooting ... 49
6.2.1: To Troubleshoot LED-Indicated Issues ... 49
6.2.2: To Troubleshoot Other Issues ... 50
Section 7: Modbus Communications ... 52
7.1: Operation ... 52
7.2: Functionality ... 52
7.3: Recommended Cybersecurity Practices ... 52
7.4: Required Software ... 52
7.5: IP Requirement ... 52
7.5.1: IP Port Settings ... 52
7.5.2: IP Restrictions for the Gateway ... 52
7.6: Bandwidth Calculation ... 53
Requirements for the Calculation ... 53
7.7: System Architecture ... 54
7.7.1: Network of Panels ... 55
7.7.2: Redundancy ... 56
An Example ... 56
7.7.3: NFN Legacy Modbus Gateway ... 57
Replacing the Modbus Gateway (Modbus-GW) ... 57
Using Both the CLSS Gateway and the Modbus Gateway ... 57
7.8: Agency Listings and Approvals ... 58
7.8.1: Agency Restrictions and Limitations ... 58
7.9: Standards ... 58
Underwriters Laboratories ... 58
Underwriters Laboratories Canada ... 58

National Fire Protection Association ... 58
Underwriters Laboratories Canada ... 58
7.10: Compatible Equipment ... 59
7.11: Modbus Feature Activation ... 60
7.11.1: To Purchase the Modbus Support ... 60
7.11.2: To Activate the Modbus Support ... 61
7.12: Installation and Configurations ... 62
7.13: The IP Settings ... 62
7.14: To Connect with the Modbus Client ... 62
7.15: To Configure the Modbus Settings ... 63
7.16: To Configure the Modbus Client ... 66
7.17: Modbus Command Support ... 66
Exception Responses ... 66
Modbus Addressing ... 66
7.18: CLSS Gateway Control Feature ... 67
7.18.1: Enabling the Control ... 67
7.18.2: Control Commands ... 67
For NOTIFIER UL ... 67
Generic Commands List ... 69
7.19: NOTIFIER UL: Analog Values and Trending ... 69
Analog Value Use Cases ... 70
7.20: Register Mapping ... 71
7.20.1: Register Mapping Overview ... 71
Point Status Holding Registers ... 71
Zones/Panel Circuits Status Holding Registers ... 74
Channel Status Holding Registers ... 75
Mapping for Channels ... 76
Mapping for Channels ... 78
7.20.2: Gamewell-FCI: CAM Text Event Holding Registers ... 78
Bell Circuits Status Holding Registers ... 80
Panel Status Holding Register ... 82
Analog Values Input Registers ... 82
Panel and System Troubles Holding Registers ... 82
7.20.3: General Counters ... 83
7.20.4: Gateway Information Input Registers ... 84
7.20.5: Node Status Details ... 84
For Gamewell Panel Status ... 84
For Pearl Panel Status ... 84
7.21: Read Device Identification (0x2B/0x0E) ... 85
7.22: Troubleshooting ... 85
7.22.1: What are some basic guidelines when installing a CLSS Gateway? ... 85
7.22.2: How fast can the Modbus client poll the gateway? ... 85
7.22.3: How can I tell if the gateway is running? ... 86
7.22.4: How do I recover a lost password from the gateway? ... 86
7.22.5: What is an “initialization read” for analog values? ... 86
7.22.6: How many analog values can I read at a time? ... 86
7.22.7: Why do I get an exception code when trying to read an analog value? ... 86
7.22.8: Why do I get all zeros when I read an analog value? ... 86
7.23: What is the “Analog Value Polling Time Out”? ... 86
7.24: Conversion to Modbus RTU ... 87
7.24.1: Hardware Configuration ... 87
7.24.2: Software Configuration ... 87

7.24.3: Connecting the Moxa MGate MB3180 Interface ... 88
7.25: System Trouble ... 89
7.26: Exception Responses ... 89
7.27: CLSS Gateway Active Event Code ... 90
7.28: Device Types ... 91
7.29: System Troubles Register Map ... 93

Section 8: The BACnet Feature ... 112
8.1: Agency Listings ... 112
8.1.1: Compliance ... 112
National Fire Protection Association ... 112
Underwriters Laboratories ... 112
Underwriters Laboratories Canada ... 112
8.2: Installation ... 112
Local ... 112
Canada ... 113
8.3: Compatible Equipment ... 113
8.4: CLSS Gateway Parts ... 114
8.5: System Requirements ... 114
8.6: Recommendations ... 114
8.7: System Architecture ... 115
8.7.1: IP Restrictions for the Gateway ... 115
8.7.2: IP Requirements ... 115
IP Port Settings ... 115
8.7.3: Single Panel Architecture ... 116
8.7.4: Multi-panel Network Architecture ... 117
8.8: BACnet Feature Activation ... 118
8.8.1: To Purchase the BACnet Support ... 118
8.8.2: To Activate the BACnet Support ... 119
8.9: Configuring the BACnet Network Settings ... 120
8.9.1: Installation and Configurations ... 120
8.9.2: The IP Settings ... 120
8.10: To Connect with the BACnet Client ... 121
8.10.1: To Configure the BACnet Settings ... 122
8.11: Replacing the BACNET-GW ... 126
8.12: Using Both the CLSS Gateway and the Legacy BACnet Gateway ... 126
8.13: BACnet PIC Statement ... 127
8.13.1: Protocol Implementation Conformance Statement (Normative) ... 127
BACnet Protocol Revision: 14 ... 127
Equations for Object IDs (Instance Numbers) ... 136

Appendix A: Gateway Operating Conditions ... 141
A.1: Wirings and Power ... 141

Appendix B: Modulations and Power Used ... 142

Appendix C: Connecting to the Panels ... 143
C.1: Gateway Board Connections ... 143
C.1.1: Connecting to a Fire Alarm Panel ... 144
Improving the Signal Fidelity ... 144
C.2: Supported Panels ... 145
C.3: AM Series Panels ... 145
C.3.1: Connection Options ... 145
C.3.2: To Use an RS-232 Connection ... 145

C.3.3: Power Connection 146
C.4: ESSER Panels 147
C.4.1: Connection Options 147
C.4.2: To Make a Remote Access Connection on RS-232 148
C.4.3: To Make a WINMAG Connection on RS-232 152
C.4.4: Power Connection 152
C.4.5: To Make a WINMAG Connection Using an SEI 1 Card 154
IQ8: Connecting through a Serial Interface Card 154
C.4.6: Power Connection 154
C.4.7: To Make a WINMAG Connection Using an SEI 2 Card 156
For IQ8 Panels 156
C.4.8: Power Connection 156
C.4.9: Power Connection 157
C.4.10: To Make a WINMAG Connection on RS-485 159
For FlexES Panels 159
C.4.11: To Make a CMSI Connection Using an OTG-RS232 Cable 160
C.5: Farenhyt Panels 161
C.5.1: Connection Options 161
C.5.2: To Use an RS-485 Connection 161
C.5.3: Power Connection 161
C.5.4: Programming for Annunciator (ANN-PRI) 163
C.5.5: To Program for Annunciator 163
C.6: Fire-Lite® Panels 164
C.6.1: Connection Options 164
C.6.2: To Use an RS485 Connection 164
C.6.3: Power Connection 164
C.6.4: Programming for Annunciator (ANN-PRI) 166
C.6.5: To Program for Annunciator 166
To Verify the Changes 166
C.7: FireWarden Panels 167
C.7.1: Connection Options 167
C.7.2: To Use an RS-485 Connection 167
C.7.3: Power Connection 167
C.7.4: Programming for Annunciator (ANN-PRI) 169
C.7.5: To Program for Annunciator 169
To Verify the Changes 169
C.7.6: To Use Panel's Printer Port Connection 170
C.7.7: Power Connection 170
C.8: Gamewell-FCI Panels 172
C.8.1: Connection Options 172
C.8.2: To Use Panel's Printer Port Connection 172
C.8.3: Power Connection 173
C.8.4: Power Connection 174
C.9: Gent Panels 176
C.9.1: Connection Options 176
C.9.2: Compact Series Panels 176
To Use a RS-232 Connection 176
C.9.3: Power Connection 177
To Use a USB Connection 178
C.9.4: Power Connection 178

C.9.5: Vigilon Series Panels 179
To Use a UART/TTL Connection 179
C.9.6: Power Connection 179
To Use an RS-232 Port via an I/O Card 179
C.9.7: Power Connection 181
To Use a USB Connection 181
C.9.8: Power Connection 181
C.10: Morley-IAS Panels 182
C.10.1: Connection Options 182
C.10.2: To Use an RS-232 Connection 182
C.10.3: Power Connection 182
C.11: NOTIFIER® UL 184
C.11.1: Connection Options 184
C.11.2: To Use a NUP Connection 184
Direct Connection with the Panel 184
Connection through an NCM Card 185
Connection through a DVC Card 187
C.11.3: Power Connection 189
C.12: NOTIFIER® European Panels (EN) 190
C.12.1: Connection Options 190
C.12.2: To Use a NUP Connection 190
C.12.3: To Use an RS-485 Connection 191
C.12.4: Power Connection 191
C.13: Silent Knight Panels 193
C.13.1: Connection Options 193
C.13.2: To Use an RS-485 Connection 193
C.13.3: Power Connection 193
C.13.4: Programming for Annunciator (ANN-PRI) 195
C.13.5: To Program for Annunciator 195
C.14: Triga Panels 196
C.14.1: Connection Options 196
C.14.2: To Use an RS-485 Connection 196
C.14.3: Power Connection 196
C.14.4: Programming for Annunciator (ANN-PRI) 198
C.14.5: To Program for Annunciator 198
C.15: VESDA® Detectors 199
C.15.1: Connection Options 199
C.15.2: To Use an Ethernet Connection 199
Before Connecting 199
C.15.3: Power Connection 199

Appendix D: Compatible Cellular Modules 201
D.1: Operation 201
D.2: Supported Modules 202
D.3: Standards and Codes 202
D.4: Approvals 202

Appendix E: LAN-Connected CLSS Horizon 203
E.1: Functionality 203
E.2: CLSS Horizon Topology 203
E.3: IP Requirements 204
E.3.1: IP Port Settings 204

E.3.2: IP Restrictions for the Gateway 204
E.4: Compatible Equipment 204
E.5: Connecting the LAN-Connected Horizon 205
E.6: Configuration Settings 206
E.6.1: To Configure Using the CLSS App 206
E.6.2: To Configure Using the Configuration Tool 207
E.6.3: To Provide Server Capability to the Gateway 209
E.7: To Configure the Gateway in CLSS Horizon 210

Section 1: General Information

1.1 About This Manual

This *CLSS Gateway Installation and Users' Manual* provides detailed procedures about installation, deployment, and upgrade of the gateway. The manual describes:

- the fixed CLSS Gateway,
- its installation environment,
- mounting and connecting the gateway circuit board to a fire detection panel, and
- initial gateway configurations

Using This Manual This manual is written with the understanding that the user is trained in the operations and services required for this product.

Usages

In this manual, product name usages are as below:

- The *CLSS Gateway* may also be referred as the *gateway*
- The *Connected Life Safety Services* mobile App may also be referred as the *CLSS App*
- The *CLSS Site Manager* may also be referred as *the Cloud*
- The term CLSS Gateway may refer to HON-CGW-MBB and CGW-MB, unless otherwise specified

1.2 Information Sources

Honeywell offers suitable information sources based on informational requirements.

1.2.1 Training Modules

Training modules are available when logged onto:

https://fire.us.honeywell.com/#/help-videos (For USA)

https://fire.eu.honeywell.com/#/help-videos (For Europe)

1.2.2 Related Documents

The following table lists documents related to the CLSS Gateway:

Table 1.1: Related Document List

Product	For This Purpose...	Refer to...
CLSS Gateway		
	Quick Installation and Setup	CLSS Gateway Quick Installation Guide P/N: 50151848-001
	Get comprehensive installation and configuration details	CLSS Gateway Installation and Users' Manual (This document) P/N: LS10248-000HW
	Configure for Honeywell Alarm Transmission Service	Supplement for Honeywell Alarm Transmission Service P/N: LS10248-152HW
Gent Vigilon Panels:		
• COMPACT-24-N	Installation	Installation Instructions - Vigilon Compact Panel Based Fire Detection and Alarm System P/N: 4188-1026
• COMPACT-PLUS	Installation	Installation Instructions - Vigilon Compact Plus Panel Based Fire Detection and Alarm System P/N: 4188-1101
• VIGPLUS-24 or VIGPLUS-72	Installation	Installation instructions Vigilon Plus 4/6 Loop Control Panel Based Fire Detection and Alarm System P/N: 4188-1100
Notifier Panels:		
• NCA-2	Installation	NCA-2 Installation Manual 52482
• NFS-320	Installation	NFS-320 Installation Manual P/N: 52745
	Programming	NFS-320 Programming Manual P/N: 52746
	Operation	NFS-320 Operations Manual P/N: 52747
	UL Listing Information	NFS-320 and NFS-320SYS Listing Document P/N: 52745LD

Table 1.1: Related Document List *(Continued)*

Product	For This Purpose...	Refer to...
• NFS2-640	Installation	NFS2-640 Installation Manual P/N: 52741
	Programming	NFS2-640 Programming Manual P/N: 52742
	Operation	NFS2-640 Operations Manual P/N: 52743
	UL Listing Information	NFS2-640 Listing Document P/N:52741LD
• NFS2-3030	Installation	NFS2-3030 Installation Manual P/N-52544
	Programming	NFS2-3030 Programming Manual P/N-52545
	UL Listing Information	NFS2-3030 UL Listing Document P/N: LS10006-051NF-E
• N16	Installation, Programming, Operation	N16 Instruction Manual P/N: LS10239-000NF-E
	UL Listing Information	N16 UL Listing Document P/N: LS10239-051NF-E
VeriFire® Tools		
	Software Installation	VeriFire® Tools Product Installation Guide P/N: 51690
	On-line Help	VeriFire® Tools Help Files
CLSS-Enabled LTE Commercial Fire Alarm Communicator		
	Install and get started quickly	Getting Started with CLSS P/N: QHW-62051
	Installation and Operation	CLSS-Enabled LTE Commercial Fire Alarm Communicator Installation and Operating Guide LS10265-000HW-E

Table 1.1: Related Document List *(Continued)*

Product	For This Purpose...	Refer to...
CLSS Pathway (HW-AV-LTE-M)		
	Quick Installation and Configuration	CLSS Pathway - Quick Start Guide P/N: LS10339-000HW-E
	Installation	CLSS Pathway - Product Installation Document P/N: LS10338-000HW-E
	Installation and Operation	CLSS Pathway - Installation and Operation Manual P/N: LS10340-000HW-E
CLSS Connector Utility		
	Install the utility and onboard the CLSS Gateway with a Central Monitoring Station	CLSS Central Station Onboarding Guide P/N: LS10378-000HW-E
CLSS Horizon		
	Installation and Operation	CLSS Horizon Cloud Connected GUI Installation and Operation Manual P/N: LS10252-000HW-E

1.3 Documentation Feedback

Your feedback helps us keep our documentation up-to-date and accurate. If you have any comments or suggestions about our Online Help or printed documents, you can email us.

Please include the following information:

- Product name and version number (if applicable)
- Printed document or Online Help
- Topic title (for Online Help)
- Page number (for printed document)
- A brief description of content you think should be improved or corrected
- Your suggestion for how to correct/improve documentation

Send email messages to:

FireSystem.TechPubs@Honeywell.com

Please note this email address is for documentation feedback only. If you have any technical issues, please contact Honeywell Technical Services.

1.4 Abbreviations Used

Table 1.2: Abbreviations List

Abbreviation	Description
CLSS	Connected Life Safety Services
DACT	Digital Alarm Communicator Transmitter
ESD	Engineered Systems Distributor
LTE	Long-Term Evolution The wireless broadband communication standard for mobile devices and data terminals.
NFN	NOTI-FIRE-NET™ The network interface for NOTIFIER™ Intelligent Fire Alarm Control Panels
NUP	NOTIFIER Universal Protocol The Universal Protocol by NOTIFIER for all fire alarm panel communications. This protocol enables direct transfer of data between the panels and networks, without the need to translate.
OC	Ownership Code The code that confirms ownership of the gateway
POTS	Plain Old Telephone Services
PSTN	Public Switched Telephone Network
TTL	Transistor-Transistor Logic A physical connection for performing both the logic gating and amplifying functions on the serial data.
UART	Universal Asynchronous Receiver/Transmitter A physical connection that converts and provides serial data for the panel and parallel data for the gateway.
USB	Universal Serial Bus

1.5 Approvals

UL

S35608

FCC

FCC ID: PV3CGWMB

Compliance Statements:

This device complies with Part 15 of the FCC Rules. Operation is subject to the following two conditions:

1. This device may not cause harmful interference.
2. This device must accept any interference received, including, an interference that may cause undesired operation.

Caution Statements:

- Any changes or modifications not expressly approved by the party responsible for compliance could void the user's authority to operate this equipment.
- This equipment should be installed and operated with a minimum distance of 20 cm between the radiator and your body.

Industry Canada (IC) Statement

IC ID: 1609A-CGWMB

Compliance Statements: This device complies with Industry Canada license-exempt RSS standard(s). Operation is subject to the following two conditions: 1) This device may not cause interference., 2) This device must accept any interference, including interference that may cause undesired operation of the device.

Déclarations de conformité: Le présent appareil est conforme aux CNR d'Industrie Canada applicables aux appareils radio exempts de licence. L'exploitation est autorisée aux deux conditions suivantes : (1) l'appareil ne doit pas produire de brouillage, et (2) l'utilisateur de l'appareil doit accepter tout brouillage radioélectrique subi, même si le brouillage est susceptible d'en compromettre le fonctionnement.

Caution Statements:

- This equipment complies with radio frequency exposure limits set forth by Industry Cananda for an uncontrolled environment.
- This equipment should be installed and operated with a minimum distance of 20 cm between the device and the user or bystanders.

Déclarations de mise en garde:

- Cet équipement est conforme aux limites d'exposition aux radiofréquences défines par Indstrie Canada pourun environment non contrôlé.
- Cet équipement doit être installé et utilisé aven un minimum de 20 cm de distance dispositif et l'utilisateur ou des tiers.

Intertek

ID: 104270338NYM-001

NFPA Compliance (USA)

Install the CLSS Gateway in accordance with the *National Fire Protection Association Installation Standard* NFPA 72.

CSFM

CSFM ID: 7300-1637:0504

FDNY

COA# 2020-TMCOAP-000121-AMND
COA# 2020-TMCOAP-000122-AMND
COA# 2021-TMCOAP-001761-CERT
COA# 2021-TMCOAP-006279-AMND

1.6 Warnings and Cautions in This Manual

WARNING:

THESE INSTRUCTIONS CONTAIN PROCEDURES TO FOLLOW TO AVOID INJURY AND DAMAGE TO EQUIPMENT. IT IS ASSUMED THAT THE USER OF THIS MANUAL HAS BEEN SUITABLY TRAINED AND IS FAMILIAR WITH THE RELEVANT REGULATIONS.

CAUTION: USERS MUST FOLLOW THE PROCESSES AND USAGES APPROVED AS PER THE REGULATORY COMPLIANCE. A CHANGED OR MODIFIED USAGE NOT EXPRESSLY APPROVED BY COMPLIANCE COULD VOID THE USER'S AUTHORITY TO OPERATE THE CLSS Gateway.

ELECTRO-STATIC SENSITIVE DEVICES:

TAKE SUITABLE ESD PRECAUTIONS WHEN REMOVING OR INSTALLING PRINTED CIRCUIT BOARDS.

1.7 The Product Standards

THIS GATEWAY'S PANEL IS CE MARKED TO SHOW THAT IT CONFORMS TO THE REQUIREMENTS OF THE FOLLOWING EUROPEAN COMMUNITY DIRECTIVES:

- Electro Magnetic Compatibility (EMC) Directive 2014/30/EU
- Low Voltage Directive (LVD) 2014/35/EU
- Radio Equipment Directive 2014/53/EU
- RoHS Directive 2011/65/EU
- Safety LVD Directive 2014/35/EU
- Green Directive 2011/65/EU, (EU) 2015/863
- WEEE Directive 2012/19/EU

The gateway is designed to meet Additional National Requirements: EFSG [BRE, AFNOR/CNPP, and VdS], INCERT, SBSC, EMEA, and EAC

1.8 Disclaimer

Images in the document are for reference purpose only and are subject to change. All trademarks, service marks, word marks, design marks, and logos are property of their respective owners.

Section 2: Overview

CLSS Gateway is an embedded and intelligent gateway for connected buildings. It enables system maintenance providers as well as end users to remotely manage connected fire detection systems. The gateway also supports them to ensure compliance.

2.1 Operation

The gateway acts as a portal among fire alarm panels, *CLSS Site Manager*, and peripheral devices. The gateway connection with the fire alarm panel enables reading the inventory and transmitting the data. Connection with the *CLSS Site Manager* facilitates remotely monitoring and managing the fire detection systems.

2.2 Honeywell Connected Life Safety Services

The software suite enables remote management of fire detection systems. It monitors the building's fire system events in real-time and notifies users about the events immediately. It also supports periodic maintenance activities and helps in reports generation.

2.3 Gateway Board Layout

The illustration below points out those parts that are used for connections and trouble shooting.

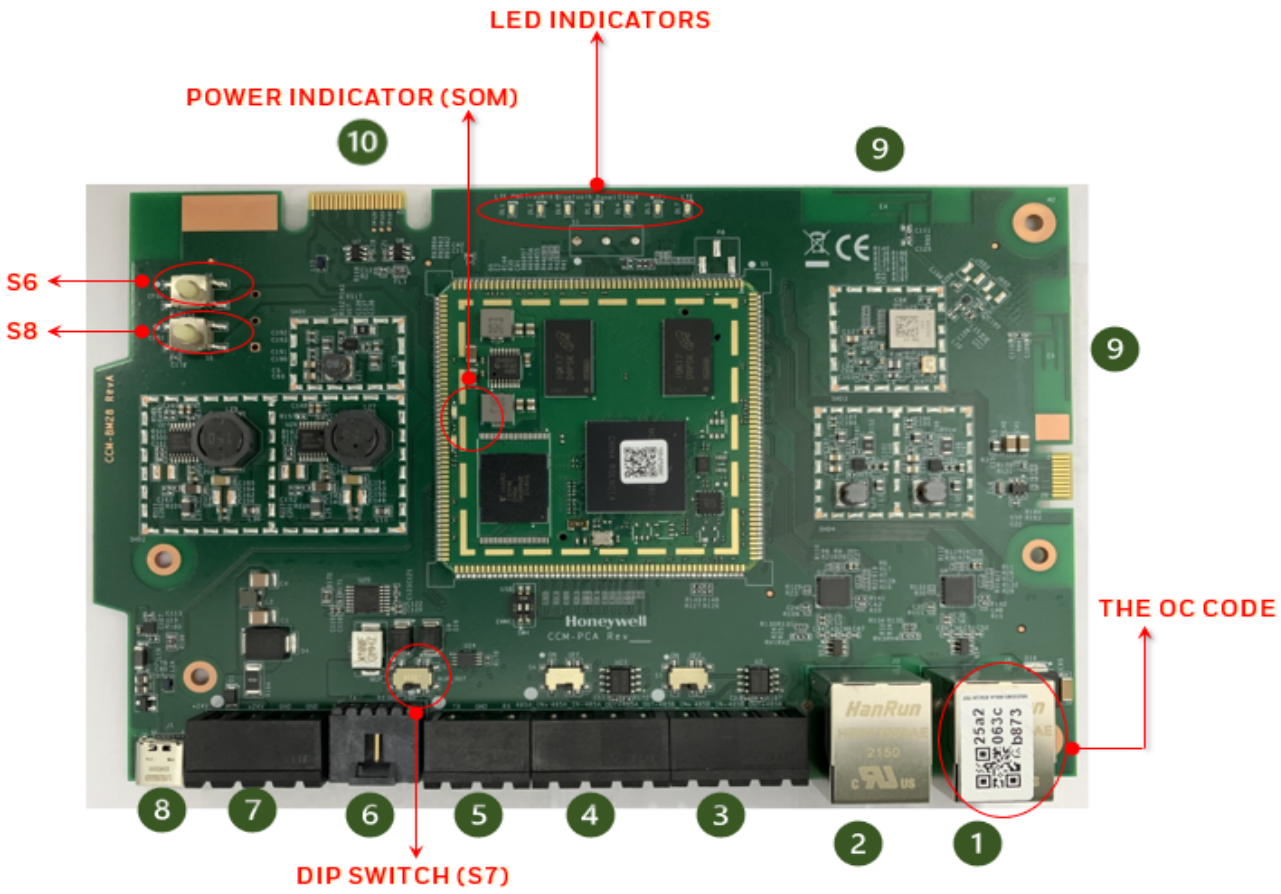

Figure 2.1: Printed Circuit Board: Layout

2.3.1 Connecting Interfaces

Figure 2.1 uses numbered labels to show the location of the interfaces for connections. This manual uses these numbered labels at various places for your convenience.

The table below uses these numbered labels to describe the type and usage of the interfaces.

Table 2.1: Gateway Interface Details

Number in the Figure	Interface Type	Label Name	Usage
1	Ethernet 1	J4	Primary Ethernet port (Eth1) that can permanently connect the gateway board with the CLSS Gateway services or a Modbus client/server. The Ownership Code (OC) on it confirms the ownership of the board. It should be registered in the *CLSS Site Manager* during the first time installation of the CLSS Gateway. Cable: CAT 5 standard Ethernet cable with RJ45 connector
2	Ethernet 2	J3	Secondary Ethernet port (Eth0) providing a TCP/IP connection to a configuration computer. Cable: CAT 5 standard Ethernet cable with RJ45 connector
3	RS-485B	P5	Receives the alarm data and device data from an RS-485 port of a panel.
4	RS-485A	P1	Receives the alarm data and device data from an RS-485 port of a panel.
5	UART/TTL	P4	Receives the alarm data and device data from a UART/TTL port of a panel.
6	NUP (RS-232)	P7	Transfers fire-related and device-related data from the panel to the *CLSS Site Manager* through the gateway. It also helps in administering the fire detection system. Connects the gateway board to a panel's RS-232 port. If the connected panel supplies power, the gateway would get power from the panel through the RS-232 port.
7	Power	P2	Connects to an external 24-volt DC power when required. It uses a power-limited, regulated, power-supply-listed connection for fire-protective signaling. Twisted-unshielded pair, 12 to 18 AWG (3.31 mm² to 0.82 mm²) It is used only when the gateway board is connected with: • A network card or • When power is not supplied to the NUP connector
8	USB	J5	Receives the alarm data and device data from a USB port of a panel.
9	Wireless Aerial	E4	Wireless antenna
10	Cellular	4D	40-pin connector for the compatible cellular module.

2.3.2 LED Indicators

The LED indicators on the gateway board use different colors to identify the operational status of the gateway. To know the location of the LED indicators on the gateway board, refer to Figure 2.1, “Printed Circuit Board: Layout”.

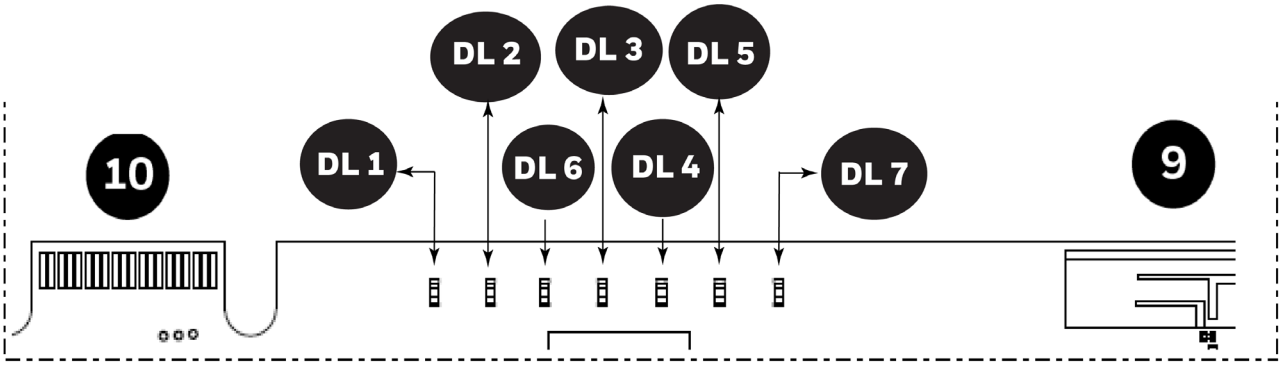

Figure 2.2: The LED Indicators on the Gateway

Table 2.2: LED Indicators and Their Messages

SOM Power-Indicating LED Indicates the gateway board’s received power status. See “Power Indicator” in Figure 2.1.	
green	**ON** The circuit board is receiving 24V power from its power source. **OFF** The circuit board is *not* receiving power.
DL1 LTE Power LED Indicates the power supply status for cellular communications	
green	**ON** The LTE radio device is receiving power from the circuit board. **OFF** The LTE radio device is *not* receiving power.
DL2 Trouble LED Indicates the gateway’s operational status	
amber	**OFF** There are no issues. **FLASHING SLOW** (flashes once per 1 second) There are communication issues with the panel or the Internet connectivity. **ON** There is a critical error in the system. To fix the issues, you can refer to the 6.2, "Troubleshooting" section, which discusses about some possible issues and their solutions.
DL6 Mobile Connectivity LED Indicates the status of mobile communications between the gateway and the CLSS App.	
Blue	**FLASHING SLOW** (flashes once per 1 second) The gateway is connected to the CLSS App. **FLASHING FAST** (flashes once per 0.25 second) The gateway is ready for the CLSS App connection. **OFF** The mobile connectivity is disabled.

Table 2.2: LED Indicators and Their Messages *(Continued)*

DL3 Panel Connectivity LED Indicates the connection status of the panel	
green	**FLASHING SLOW** (flashes once per 1 second) The panel is connected with the gateway board. **FLASHING FAST** (flashes once per 0.2 second) The gateway is fetching the inventory data. **ON** Configuration mode is enabled for configuring the gateway network settings. **OFF** The gateway is *not* communicating with the panel.
DL4 CLSS Site Manager Connectivity LED Indicates the gateway connection status with *CLSS Site Manager*	
green	**ON** The gateway is downloading the firmware from the *CLSS Site Manager*. **FLASHING SLOW** (flashes once per 1 second) The gateway is connected with *CLSS Site Manager*. **FLASHING FAST** (flashes once per 0.2 second) The gateway is connected with Internet, but not connected with the *CLSS Site Manager*. **OFF** The gateway is *not* connected with Internet.
DL5 Wireless Connectivity LED Indicates the gateway wireless connectivity status	
green	**FLASHING SLOW** (flashes once per 1 second) The wireless connectivity is enabled for the *CLSS Site Manager* connection. **OFF** The wireless connectivity is disabled.
DL7 Cellular Connectivity LED Indicates the LTE radio connection status	
green	**FLASHING SLOW** (flashes once per 1 second) The LTE radio is transmitting data. **FLASHING FAST** (flashes once per 0.2 second) The LTE radio may have a connectivity issue, which requires attention. **OFF** There is no cellular connection.

2.3.3 Switches on the Gateway Board

Below table informs about the switches on the gateway board. To locate the switches on the gateway board, refer to Figure 2.1:, "Printed Circuit Board: Layout".

Table 2.3: Gateway Board Switches

Switches	Purpose
S6	For securely configuring the gateway's settings Pressing the switch for six seconds switches the gateway board to the configuration mode.
S7	For changing the direction of the 24V power of the NUP/RS-232 connector NUP_IN: The gateway board receives power through its NUP/RS-232 port. NUP_OUT: The gateway board receives power through its power supply port, which is connected to an external power supply source.
S8	For enabling mobile pairing Pressing the switch for ten seconds enables mobile pairing.

2.4 CLSS Gateway Parts

Part Number	Description
HON-CGW-MBB	CLSS Gateway with enclosure
CGW-MB	CLSS Gateway board
CGW-BB	CLSS Gateway enclosure
50160636-001	CLSS Gateway kit. It includes a 30" NUP cable and a NOTIFIER lock and key set.
32351718-001	10 ft NUP Serial (RS-232) cable kit

Section 3: Security Recommendations

3.1 For Users

An administrator should:

- Regularly review the user roles and permissions for a CLSS account
- Immediately remove users who should no longer have access to CLSS

A technician should:

- Use discretion to allow or deny a location access request.
- Disconnect the *CLSS App* from the *CLSS Gateway*, once the required activity is completed.
- Turn OFF the location access in the CLSS App's **Security Settings**, when location access is not required.

3.2 For Preventing Potential Risks

Security threats applicable to networked systems include unauthorized access, communication snooping, viruses, and other malicious software agents.

3.2.1 Unauthorized Access

Unauthorized access results from unsecured user name and password, uncontrolled access to the equipment, or uncontrolled and unsecured access to the network.

It results the following:

- Loss of system availability
- Incorrect execution of controls causing damage to the equipment
- Incorrect operation, spurious alarms, or both
- Theft or damage to the contents of the system
- Capture and modification or deletion of data causing possible liability to the installation Site and Honeywell

User Access and Passwords

Observe the following good practices:

- The password has one numerical, one upper case, one lower case, and one special character whenever any user registers or changes the credentials.
- Enforce a password change periodically
- Do now allow any dictionary words as passwords
- Check passwords against known common weak password databases
- Do not allow common and predictable passwords though they meet other requirements. For example: P@SSwOrd
- Not allow usernames, service names, or any such context-specific words
- Passwords should be complex and not easily guessed; and, should not contain phrases used in common speech.
- Do not use personally identifiable information as a password, such as social security numbers, addresses, birth dates.
- Provide only the minimum level of access and privileges for each user.
- Ensure physical security of passwords. Avoid and warn against writing user names and passwords where they can be seen by unauthorized personnel.
- Periodically audit user accounts and remove any that are no longer required.

3.2.2 Memory Media

- Use only authorized removable media.
- Use an up-to-date anti-virus software to scan the removable media and check for viruses and malware.
- Ensure that the memory media is not used for other purposes to avoid risk of infection.
- Control access to media containing backups to avoid risk of tampering.

3.2.3 Software and Firmware Updates

System software and firmware updates may be offered from time to time.

Ensure that your local representative:

- Has the up-to-date contact details, and
- Periodically visits the Honeywell web site for up-to-date product information

3.2.4 Viruses and Other Malicious Software Agents

Malicious Software include the following:

- Viruses
- Spyware
- Worms
- Trojans

These may be present in a computer using a Monitoring Station Software or in a USB pen drive, which is used to copy data to computer.

The intrusion of malicious software agents can result in performance degradation, loss of system availability, and the capture, modification, or deletion of data — including configuration and device logs.

USB devices from other infected systems on the network or malicious Internet sites can also transfer viruses.

3.2.5 Network and Firewall Setup

Inbound (In) Port: The port another computer uses to access a gateway functionality. An application on the gateway will be actively listening on this port for client connections.

Outbound (Out) Port: The gateway uses outbound ports to connect to Internet or *CLSS Site Manager*. The Cloud services in the *CLSS Site Manager* will be listening on these ports waiting for a connection from the gateway.

By default, block all inbound and outbound connections and allow only the ports listed in the below table:

Port Number	Type	IN/OUT	Purpose/Remarks
443	HTTPS - TCP	Bidirectional	NOC APIs communications with a Supplier Cloud and *CLSS Site Manager*
1433	TCP	Bidirectional	NOC Server and SQL DB private network-based communications
9000	TCP	Bidirectional	Pathway devices and NOC communications
9000	UDP	Bidirectional	Pathway devices and NOC heartbeat communications
6000 - 6030	TCP	Bidirectional	Monitoring station and NOC communications

The *CLSS Pathway* device sends alarms to *CLSS Site Manager*, using the below endpoints:

Region	All End-points
West US	• https://fireclssnocwus.honeywell.com/clssnocalarmrcvr/ • https://fireclssnocwus.honeywell.com/clssnocapisrv/
East US	• https://fireclssnoceus.honeywell.com/clssnocalarmrcvr/ • https://fireclssnoceus.honeywell.com/clssnocapisrv/

Best Practices: Network Security

Open protocols, unencrypted connections, and unauthenticated sites are risks.

Ensure the following:

- Required firewalls and VPN connections are in place
- The logging systems monitor malicious activity and perform regular audits
- Unused services and ports are disabled
- Security patches are up to date
- Users have only minimum required privileges for files and folders

Best Practices: Connected Devices

■ For VESDA Detectors

- For the *CLSS Gateway* version 3.3.4.20 or below: When the Eth0 port is connected to a VESDA detector, it is highly recommended to *not* use the Eth1 port for the CLSS Cloud connectivity as it poses potential security risks. Instead, use wireless or cellular connection to the CLSS Cloud.
- Adhere to the xtralis security guidelines: https://xtralis.com/file/9584
- When connected with one VESDA detector, use a short point-to-point link between the VESDA detector and the *CLSS Gateway*.
- When connected with multiple VESDA detectors, allow only the VESDA detectors and the gateway connections. Do not allow any other connections.
- Allow only authorized personnel to configure VESDA devices.

3.2.6 Securing the Monitoring Stations

- Good security practices should be observed on the Monitoring Station PCs.
- Operating systems and software should be kept up to date by installing the manufacturers updates, as well as maintaining up-to-date anti-virus software on all computers, which may be connected directly or via a network.
- For monitoring stations, it is recommended to use secure VPN channel, which must be placed behind the firewall.
- It is suggested to use hardware receiver as an adapter at the monitoring station.
- For the CLSS Pathway devices, it is recommended to use secure private network, and keep them behind the firewall.
- Only authorized personnel should get access to private network.
- Best industry standards should be followed while configuring the firewall policies.
- Devices should be safely installed in the secure zone and they must be out of reach to unauthorized personnel.
- Ensure that the computers are regularly scanned for viruses.
- Only install files and software from trusted sources and use only them on associated computers to avoid malicious software.
- Use only authorized removable media. For example, use CD, DVD, external hard drives, or USB memory sticks, which have been scanned using up-to-date anti-virus software.

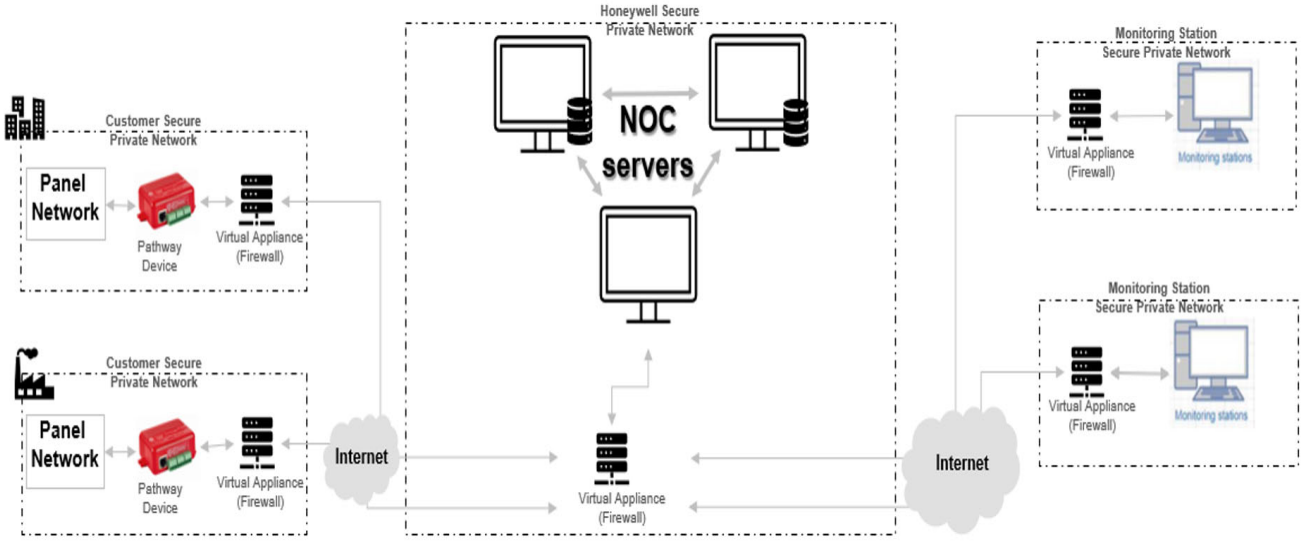
Honeywell Secure
Private Network
NOC
servers
Customer Secure
Private Network
Panel
Network
Pathway
Device
Virtual Appliance
(Firewall)
Customer Secure
Private Network
Panel
Network
Pathway
Device
Virtual Appliance
(Firewall)
Internet
Virtual Appliance
(Firewall)
Internet
Monitoring Station
Secure Private Network
Virtual Appliance
(Firewall)
Monitoring stations
Monitoring Station
Secure Private Network
Virtual Appliance
(Firewall)
Monitoring stations

Section 4: Installation

You can use a fixed gateway in the fire detection system.

NOTE: This section refers to the fixed gateway P/N: HON-CGW-MBB. For instructions on mounting the portable gateway, P/N: CGW-MB, refer to the NBB-2 installation document LS10250-000NF-E.

CAUTION: THE GATEWAY MUST BE INSTALLED INDOORS IN A DRY LOCATION.

WARNING: INSTALL AS PER THE LOCAL BUILDING AS WELL AS CUSTOMER-SPECIFIC REQUIREMENTS. FOR EXAMPLE, INSTALLING AND OPERATING THE GATEWAY WITH ITS WIRELESS TECHNOLOGY MIGHT BE RESTRICTED NEAR MEDICAL EQUIPMENT, FUELS, OR CHEMICALS. ENSURE THAT THERE ARE NO CONFLICTS.

4.1 Wall Mounting the Fixed Gateway

It is recommended to keep the gateway within 1 meter (3-feet) from the connected panel or the network card. The minimum distance between the gateway and the panel should be 30 cm.

CAUTION: THE EQUIPMENT IS SUITABLE FOR MOUNTING AT A MAXIMUM HEIGHT OF 9.9 FEET ONLY.

NOTE: In a low LTE signal area, you may choose to use external aerials.

Follow the instructions below to mount the gateway enclosure:

1. Open the package and take out the contents.
2. Inspect the contents for damage. If there is any damage, do not proceed with installation. Return the package.
3. Place the right-side door edge on a flat surface for support.
4. At the right-side door edge, punch out a hole for the door locking screw or for an optional keyed lock (see Figure 4.1).

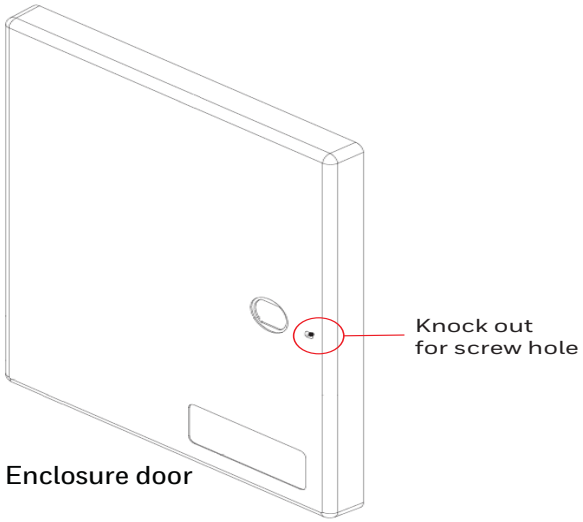

Figure 4.1: Screw Hole Knock Out

5. Depending upon the wall construction, select suitable screws to mount the enclosure.
6. Place the backbox on the wall where the enclosure is to be mounted.
7. Confirm that the placement of the backbox allows the door to swing open freely.

8. Mark and pre-drill the hole for the top mounting bolt (see Figure 4.2).

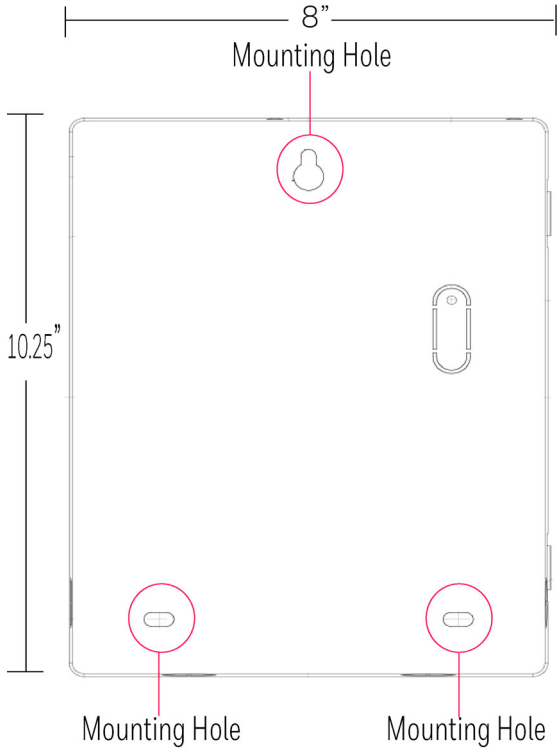

Figure 4.2: Mounting the Backbox

9. Remove the backbox.
10. In the top mounting hole, insert the mounting screw.
11. Tighten the screw, leaving space for hanging the enclosure.
12. Mount the backbox over the top screw and level it.
13. Mark the locations for the two lower mounting holes.
14. Remove the backbox and drill the mounting holes.
15. Mount the backbox over the top screw, then install the remaining fasteners.
16. Tighten all fasteners securely.

4.2 Mounting the Portable Gateway

Section reserved for future functionality.

4.2.1 Mounting onto the Chassis

Section reserved for future functionality.

4.3 Gateway Board Connection Options

The gateway board can be connected with a cellular module, wireless aerials, the *CLSS Site Manager*, a configuration computer, a panel, a mobile device, and an external power supply.

Figure 4.3 illustrates the connection options at the top side of the gateway board.

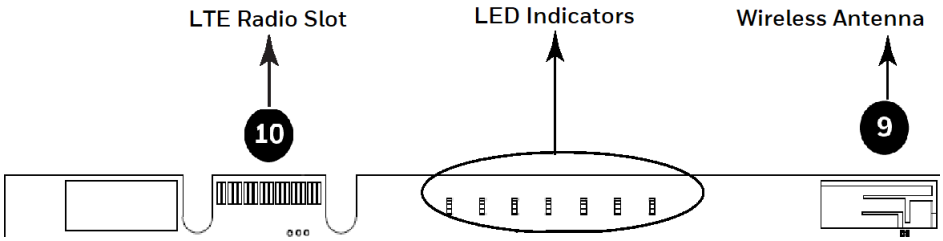

Figure 4.3: Gateway Connections - Top Side

Figure 4.4 illustrates the gateway connection options at the bottom side of the gateway board.

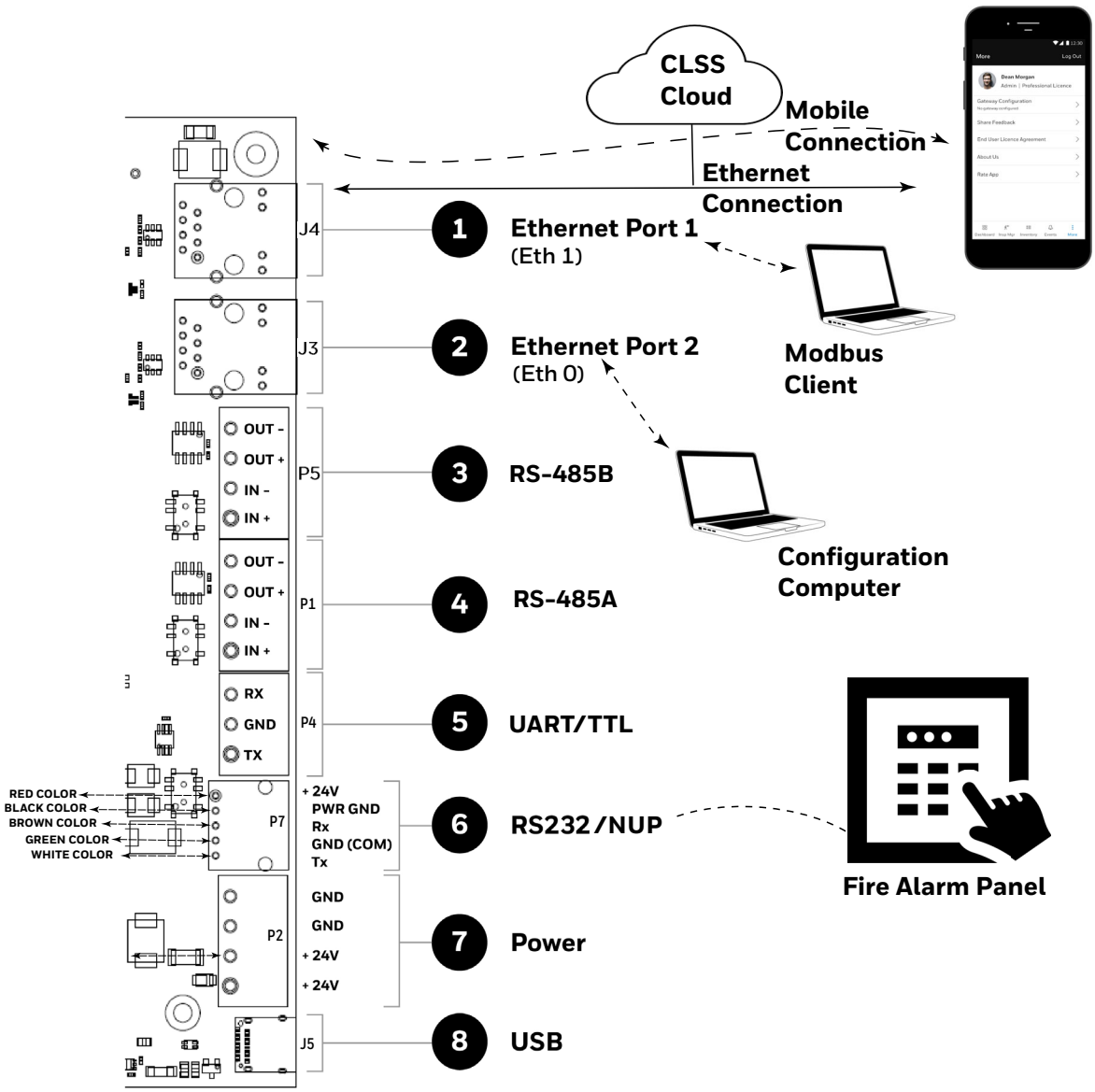

Figure 4.4: Gateway Connection Options - Bottom Side

4.3.1 Connecting to a Fire Alarm Panel

To know about supported panel variants, their connection options, and commissioning procedure, refer to the "Connecting to the Panels" on page 143.

4.3.2 Installing a Cellular Module

To use *CLSS Site Manager* and to provide value-added alarm transmission services with a cellular connection, plug in the cellular module onto the gateway board.

Compatibility Requirements

To ensure proper operation, these cellular module shall be compatible with the CLSS Gateway.

To know more about the supported devices, refer to "Compatible Cellular Modules" on page 201.

Before Installing a Cellular Module

- If installing on an existing operational gateway, inform the operator and local authority that the gateway will be temporarily out of service.
- Disconnect power to the gateway.

Precautions for Service Quality

- Carefully select the installation location of the CLSS Gateway.
- Do not mount the gateway on or near metal objects. This includes steel cabinets, metal walls, steel beams, steel roofs or roofing girders, foil backed insulated walls, and duct works.
- During the installation, periodically monitor the signal quality via the CLSS App to predict QoS (Quality of Service) of the LTE radio over time.

  If the installation location does not offer good QoS, try the following options:

  1. Move the gateway to achieve the best QoS. Typically, moving it to a higher placement offers the best QoS.
  2. Use an optional antenna external aerial connection. Antenna must be located in the same room as the CLSS Gateway enclosure. Refer to the See "To Install an External Antenna" on page 32. for details.

To Install a Cellular Module

The installation involves plugging the cellular module onto the gateway board, and securing the mounted device with a retention strap. The strap will compress the RF ground system between the cellular modules and the gateway board assembly.

1. Switch OFF the gateway.
2. Punch out the appropriate knockouts on the enclosure for the aerials (see Figure 4.5).

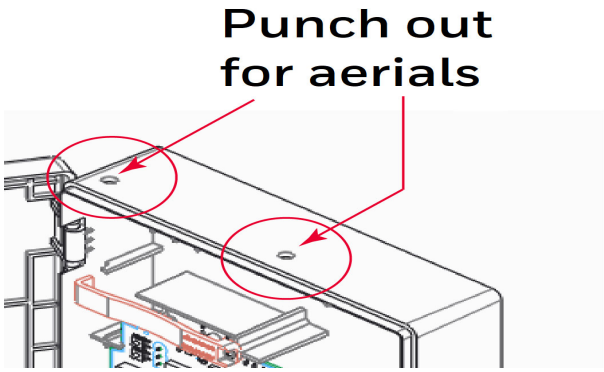

Figure 4.5: Knockouts on the Enclosure

3. Open the enclosure door.

4. On the top edge of the gateway, plug the cellular module onto the 40-pin expansion slot (see Figure 4.6).

WARNING: DO NOT USE THE SCREW ON THE TOP EDGE OF THE CELLULAR MODULE. IT WILL ADVERSELY AFFECT THE RADIO PERFORMANCE. REFER TO THE DO NOT USE THIS SCREW SHOWN IN THE FIGURE 3.4.

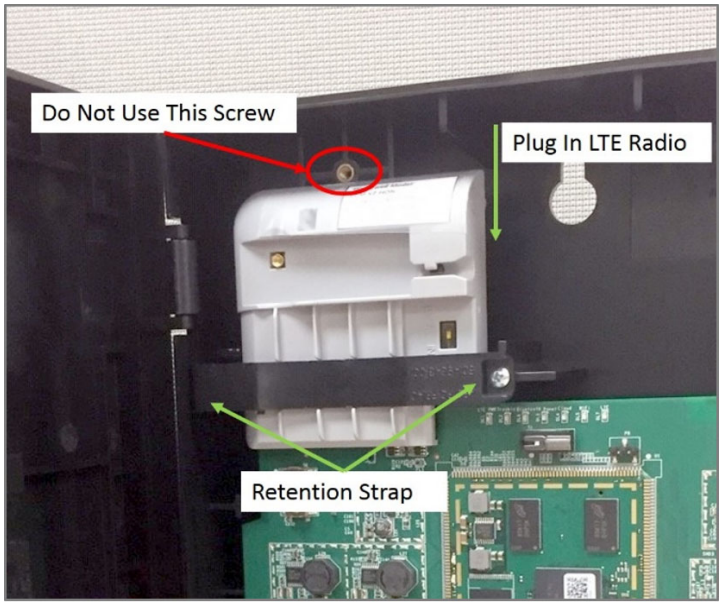

Figure 4.6: Installing the Cellular Module

5. Secure the cellular module with the retention strap and a screw, which come with the module (see Figure 4.6).

WARNING: FAILURE TO USE THE RETENTION STRAP MAY ADVERSELY AFFECT THE AERIAL PERFORMANCE.

Replacing the SIM Card

The cellular module comes with a factory-mounted SIM card. If necessary, replace it as follows:

1. Open the gateway door.
2. Remove the NUP cable or the 24v DC power cable to switch OFF the gateway board.
3. Remove the retention strap screw and the retention strap (see Figure 4.6).
4. Slide the cellular module upward to disconnect it from the gateway board.
5. Carefully remove the back cover of the cellular module.

6. Find the SIM card holder and slide its door to unlock (see Figure 4.7).

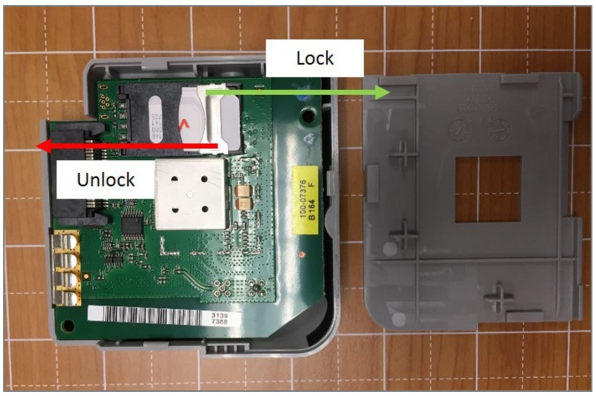

Figure 4.7: Unlock or Lock Movement

7. Remove the old SIM card and replace it with the new card.
8. Slide the card holder door back and lock it (see Figure 4.7).
9. Place the bottom cover onto the communicator and snap it closed.

4.3.3 Installing the External Aerials

In a low LTE signal area, using an external aerial may boost the signals.

When installing an aerial, ensure that:

- The aerial is within its granted FCC directional gain limitations
- The installation is in accordance with the manufacturer's instructions

To Install an External Antenna

1. Switch the SW1 switch on the cellular module to EXT.
2. Connect the internal coax adapter onto the module.
3. Route the coax adapter cable through the knock out on the enclosure.
4. Tighten the nuts at both sides of the knock out.
5. Take the external antenna.
6. Thread the antenna onto the antenna connector and tighten it.
7. (If there is a magnet at the bottom of the antenna) Attach the magnet onto the top wall of the enclosure.

   Or

   (Optional) Use a double-sided adhesive tape to secure the attachment.

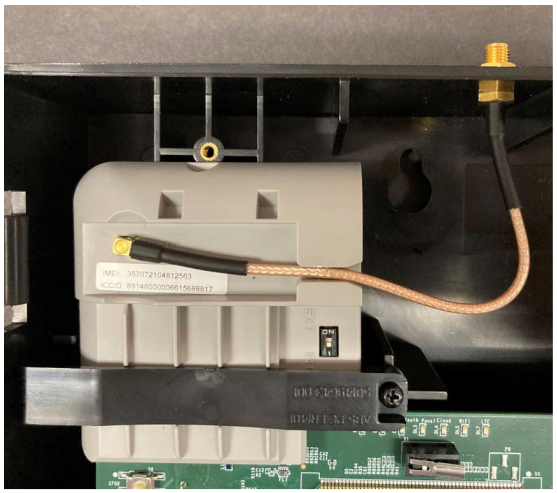

Figure 4.8: Installing an External Antenna

Section 5: Configurations

The gateway settings control the gateway's communications with the mobile, panel, detectors, and *CLSS Site Manager*.

5.1 Commissioning the Gateway

You can commission the CLSS Gateway for an already added customer or for a new customer.

5.1.1 The Commissioning Steps

Step 1: Connect to the IP network through the Ethernet 1 port of the gateway for the *CLSS Site Manager*.

Step 2: Send the panel's topology onto the *CLSS Site Manager*.

Refer to the Exporting Panel's Topology Data section.

Step 3: Connect the gateway to a panel.

Refer to the Connecting to the Panels section.

Step 3: Configure the gateway to use the connected panel.

Refer to the Configurations section. (The current section)

Steps 4: Inspection and maintenance of the gateway.

5.1.2 Exporting Panel's Topology Data

The first-time commissioning of the gateway includes uploading the panel's topology data to the *CLSS Site Manager*.

NOTE: The topology data is exported using the supported panel manufacturer's programming tool. To know about their recommended tool for exporting and related configurations, refer to the panel's documentation.

To Export the Topology Data

1. Using the tool, which the panel manufacturer recommends, export the panel's topology data into your configuration computer.
2. From the configuration computer, log into the *Connected Life Safety Services* application.
3. Ensure that the relevant *customer*, *site*, and *building* details are available in the application.
4. Select the building where the panel is located.
5. Go to the building's inventory page.
6. Click on the **Config File** button, find the exported topology data file, and select that file.
7. Wait for the upload success message.
8. Confirm that the inventory page shows details of the panel's connected devices.

5.1.3 To Configure via the Wireless Connection

1. In the mobile device, download the *Connected Life Safety Services* App from Play Store or App Store.
2. Install the App.
3. From the Honeywell on-boarding email, note down the login credentials.
4. On the mobile device, log into the *CLSS* App.
5. On the App's dashboard, at the right bottom, tap the **More** icon (see Figure 5.1).

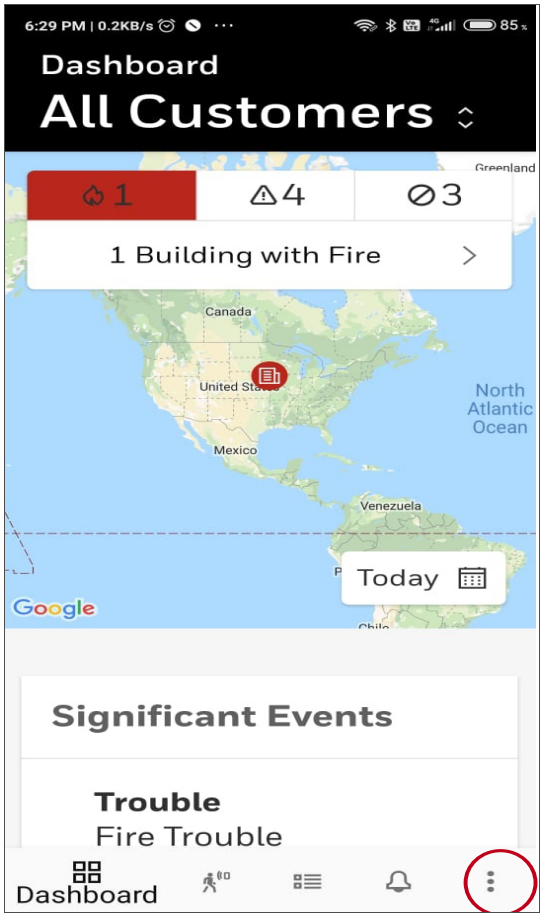

Figure 5.1: CLSS App Dashboard

6. Tap **Gateway Configuration**.
7. Follow the on-screen instructions for mobile connectivity.

NOTE: Based on the gateway you are configuring, select either *Portable Gateway* or *Fixed Gateway*.

8. Wait for the App to connect with the gateway, the fire alarm panel, Internet, and *CLSS Site Manager*. The App notifies you when configuration is completed.
9. On the dashboard, from the **All Customers** option, find the required *customer* > *site*.
10. Tap on the specific building.
11. To commission the gateway, tap on **CONNECT GATEWAY** and follow the on-screen instructions (see Figure 5.2).

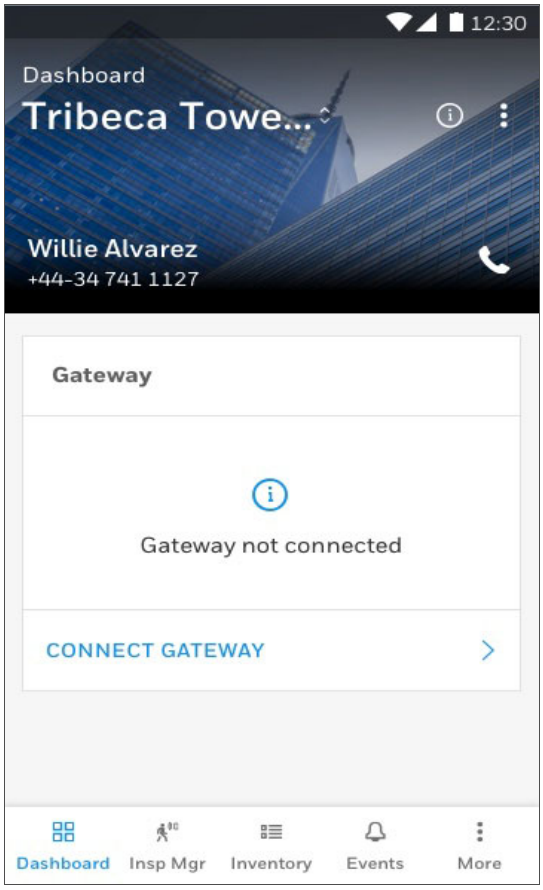

Figure 5.2: Building Details Page

NOTE: In the *Connected Life Safety Services* App, the option to enable the control functionality is available for 60 minutes, which can be extended.

At the end of 60 minutes, the user will have the option to extend the session. If not extended, the session will expire after 60 minutes and the user must enable a new session of control functionality within the *Connected Life Safety Services* App.

5.2 Verifying the Gateway Connections

While configuring the gateway, confirm that the LEDs indicate successful connections as shown in Figure 5.3.

If the LED is indicating differently, refer to Table 2.2 to know the operational status. If necessary, refer to the 6.2, "Troubleshooting" section to fix the problem or contact Honeywell Technical Support.

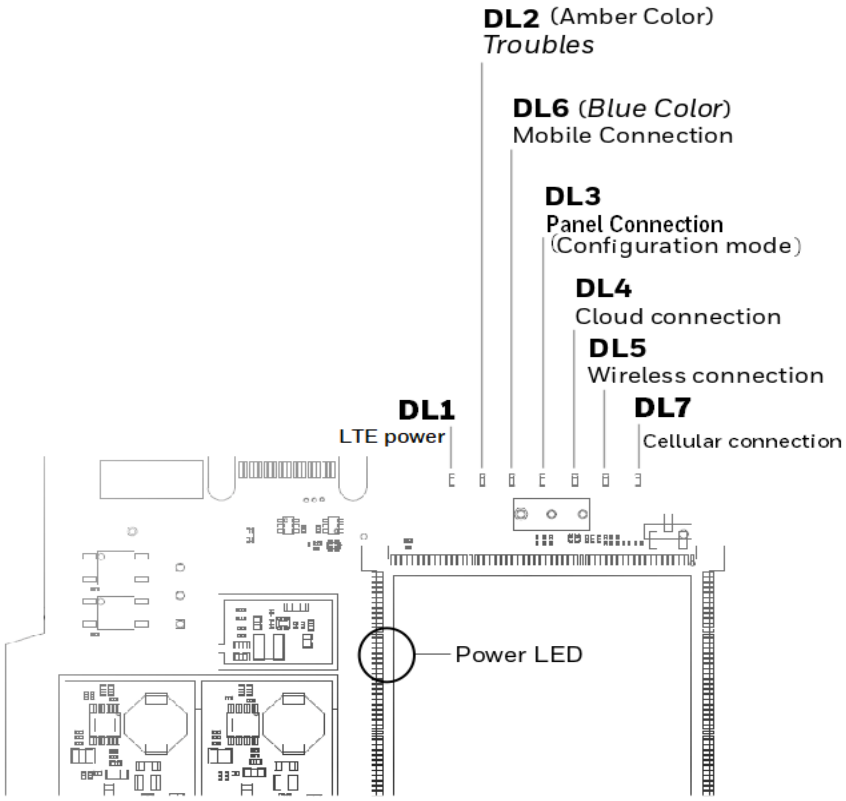

LED Indicator	State	Meaning
Power-Indicating LED	ON	Successful power connection
DL1	ON OFF	ON - The cellular module is installed and receiving power. OFF - The cellular module is not installed.
DL2	OFF	There are no issues
DL6	Flashing fast[a]	Successful mobile connection
	Flashing slow[b]	Ready for connection
	OFF	Disabled mobile connection
DL3	ON	The gateway is in the configuration mode
	Flashing fast	The gateway is getting the inventory data
	Flashing slow	The gateway is communicating with the panel
DL4	Flashing slow	The gateway is communicating with *CLSS Site Manager*
	Flashing fast	The gateway has the Internet connectivity, but not the *CLSS Site Manager* connectivity

a FLASHING FAST = 0.2 second ON and 0.2 second OFF
b FLASHING SLOW = 1 second ON and 1 second OFF

LED Indicator	State	Meaning
DL5	Flashing slow	The gateway has wireless connection with *CLSS Site Manager*
DL7	OFF	There is no cellular connection.
	Flashing slow	The LTE radio is transmitting data for the cellular connection.
	Flashing fast	The LTE radio has connectivity issues.

Figure 5.3: Connection Indicators

5.3 Panel Brand and Connection Settings

When the mobile App is connected with the *CLSS Site Manager*, you can change the panel brand's communication settings.

NOTE: You can change the connection settings using either the CLSS mobile App or the *Gateway Configuration Tool*.

5.3.1 To Change the Connection Settings

1. To change the newly connected panel's settings:
   1. Select the Customer and the Site.
   2. Tap on your connected gateway from the list of gateways.

   OR

   To change the previously connected panel's settings:

   1. Tap the three dots at the top right on the mobile App.
   2. Tap **Install Fixed Gateway**.
   3. Select the Customer and the Site.
   4. Tap on your connected gateway from the list of gateways.
2. Tap on the **Panel Brand & Connection** option on the **Gateway Summary** screen.
3. Tap on **Panel Brand**.
4. Change the panel brand, if required.
5. Tap **NEXT**.
6. Select the connection type for the panel from the **Connection Type** screen.
7. Tap **APPLY**.
8. Tap **Panel Type** on the **Gateway Summary** screen.
9. Change the values for the panel brand on the **Communication Settings** screen.
10. Tap **SAVE**.

5.3.2 Importing the Gent Panel's Inventory

The `.dat` file has configuration details of all the devices and panels in the Gent panel network along with their addresses.

1. Run the *BACnet Import Generator* tool.
2. Follow the below process to register the *BACnet Import Generator*:

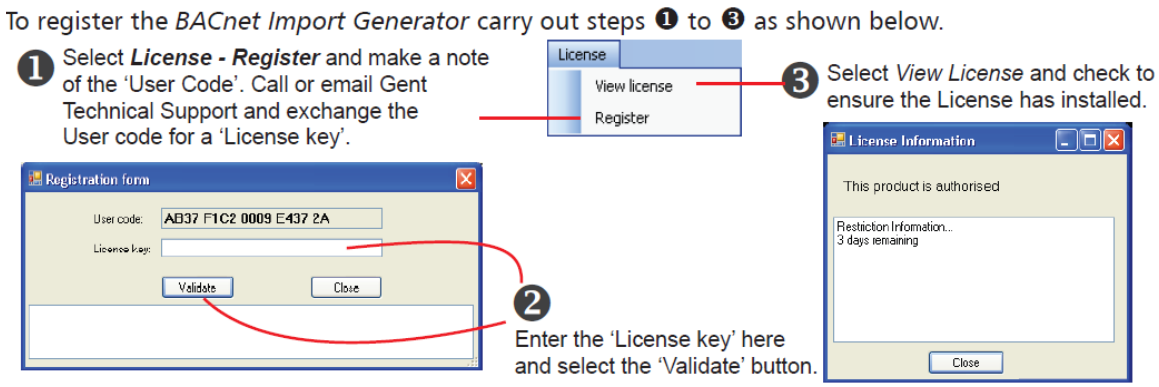

3. Create an *Input* folder and an *Output* folder.

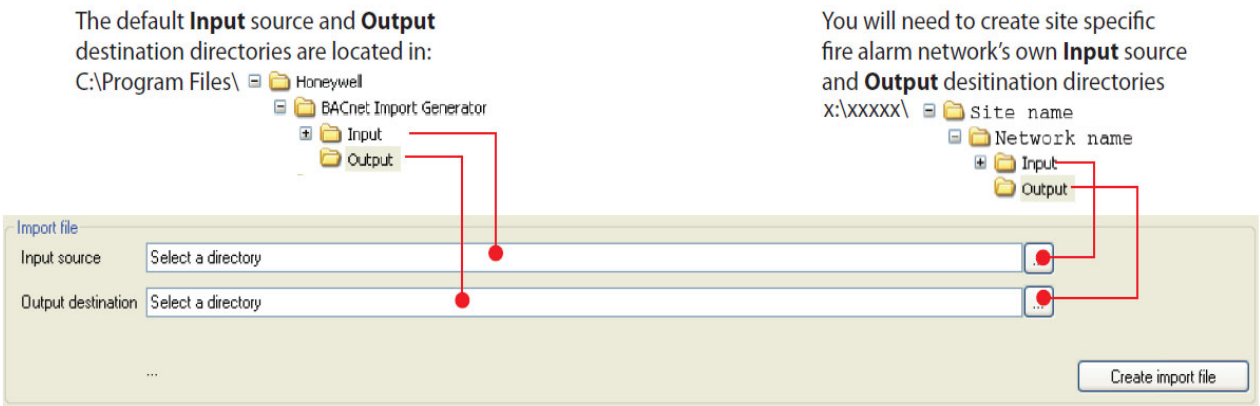

NOTE: The *Input* folder will store Vigilon configuration settings. The *Output* folder will store the `GENTGW.ini`, `GentComm.ini`, and `BacnetImport.dat` files.

4. Copy the panel's configuration files into the *Input* folder.

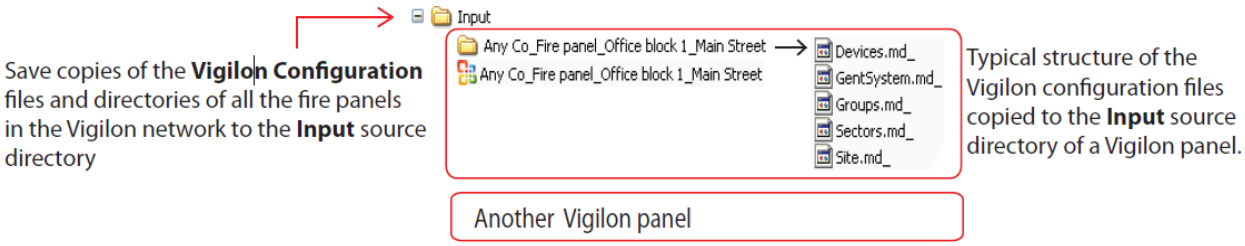

5. Click **Create Import File**.
6. Check that the `BACnetImport.dat` file appears in the *Output* folder.

5.3.3 To Configure the Panel's Connection Settings

CLSS gateway details are provided through the *Gateway Configuration Tool*, a web page-based configuration tool running on the gateway.

1. On the CLSS Gateway board, find the S6 button.
2. Press the S6 button for a minimum of 6 seconds and then release it. It will switch the gateway to configuration mode.
   The LED indicator DL3 turns ON and SOLID indicating that the configuration is enabled.
3. Connect the Ethernet cable to *Eth0* for enabling web configuration.

NOTE: The web configuration is available only on *Eth0*.

4. Open the Configuration Computer connected to the *Eth0* port of the gateway.

NOTE: The static IP of the *Eth0* port is *192.168.10.190*.

5. In the Chrome browser, enter the following URL:
   https://192.168.10.190:9443/config/index.html
6. Do the following if any security warning is shown. Otherwise, go to step 7.
   5. Click the *Advanced* link below the error message.
   6. Agree to proceed.
7. In the **Gateway Configuration Tool** page, enter the password.

NOTE: The default password is: Welcome123

8. Click **Gateway Settings** (see Figure 5.4).

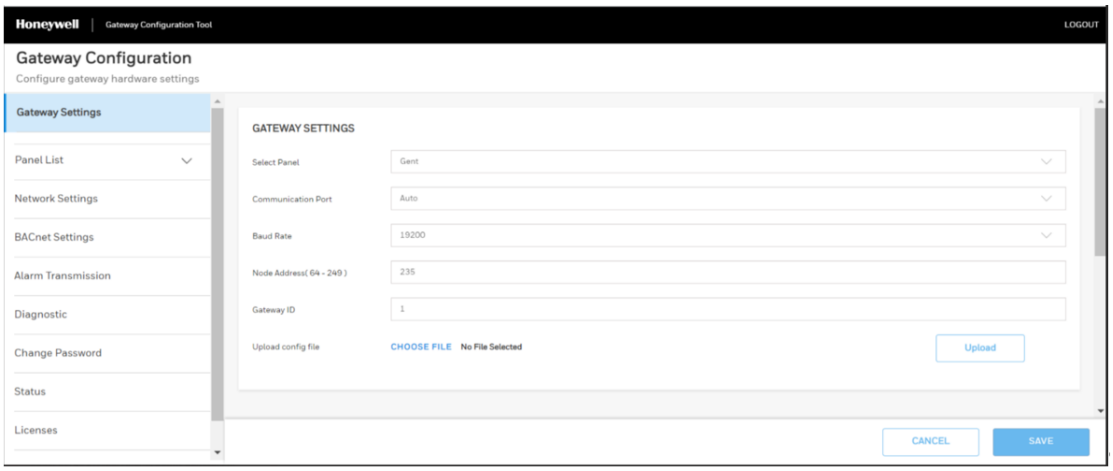

Figure 5.4: Gateway Settings Screen

9. Provide the required gateway settings details:

Table 5.1: Gateway Settings Details

Field	Description
Select Panel	Select the panel brand to which gateway is connected.
Communication Port	Select the panel port to which the gateway is connected. Options are: Auto, RS-232, or TTL.
Baud Rate	Select the Baud Rate assigned for the panel. It could be 9600, 19200, 38400, 57600, or 115200.
Node Address	Specify the gateway address between 64 to 249. The default node address is 235. **Important**: Each gateway in its network of gateways should have its own node address.
Upload Config File	Click to upload a file for the generation of IFOM inventory. The file format is different for different panel brands. Refer to the Importing the Gent Panel's Inventory section to generate Gent panel's inventory.

NOTE: Availability of the above fields depends upon the panel brand.

5.4 Honeywell CLSS Alarm Transmission Services

The CLSS Gateway enables the central monitoring service providers, fire department, and its building occupants to have the quickest response possible to an event. The building occupants are given early, personalized guidance to safety.

This service also increases the first-time fix rate for all service providers. Its predictions about certain upcoming needs reduce business disruptions as well.

NOTE: This special service is available only to select service providers. For more details, contact Honeywell Technical Support.

Communication Management

- The communication path between the gateway and the Central Station is supervised. The default supervision timing is 5 minutes.
- In case of an AC failure, the CLSS Gateway communicates to the central station after 120-minutes.

5.4.1 Central Station Communication

The CLSS Gateway receives events from a listed Fire Alarm Control Unit and transmits events using cellular, wireless, or Ethernet to Honeywell's Network Operations Center (NOC). All signals from the CLSS Gateway are delivered to Honeywell's NOC, which routes the events to the appropriate central monitoring station over an IP network.

5.4.2 Activating the Central Station Communication

In the *CLSS Site Manager*, the service provider administrator should activate the central station communication. It is a one-time activity, which can be done for an operational gateway or for a newly installed gateway.

NOTE: Before activating the central station communication, ensure that the CLSS Gateway has no communication failures. During a connection failure, the CLSS Gateway cannot send event data to the *CLSS Site Manager* or the NOC.
For example, if the gateway's Ethernet cable is disconnected, its fire panel will display *UDACT Trouble*. Only after restoring the connection and clearing the trouble, the *CLSS Site Manager* or the NOC can receive events again.

Adding a Central Station to the CLSS Account

Only those central stations added in the external accounts of the CLSS Site Manager can receive alarms the gateway sends. Therefore, a service provider administrator should first perform this one-time activity and add the accounts.

NOTE: Using the credentials given, you can log onto the *CLSS Site Manager* available on https://fire.honeywell.com and enable this feature. Honeywell recommends Chrome browser for using the *CLSS Site Manager*.

1. Log onto the CLSS *Site Manager.*
2. Click on the profile icon at the top right and click **External Accounts**.
3. Click **ADD NEW** under the **Central Stations** section.
4. Follow the on-screen instructions to add the central station account.

Install a Fixed Gateway at the Site

To enable central station communications, a CLSS Gateway must be installed.

NOTE: You can skip this procedure if you are activating the central station communication for a CLSS Gateway that is already installed.

1. Log into the *Connected Life Safety Services* App in your mobile device.
2. Tap the three horizontal dots icon at the top-right side on the **All Customers** dashboard.
3. Select **Install Fixed Gateway** from the pop-up menu.
4. Follow the on-screen instructions to complete the gateway installation in the App.

Configuring the Central Station Communication

A technician or a service provider administrator can configure the central station communication of the CLSS Gateway.

1. Log onto the CLSS Site Manager.
2. Select the customer from the **All Customers** list at the top-right side.

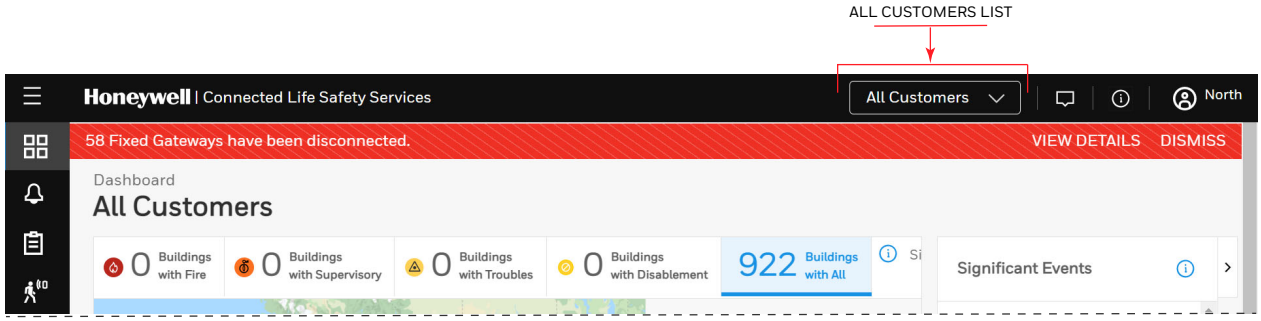

3. Select the customer, select the site, and then select the building requiring alarm transmission.

4. Click the **FEATURE ACTIVATION** icon at the left navigation bar.

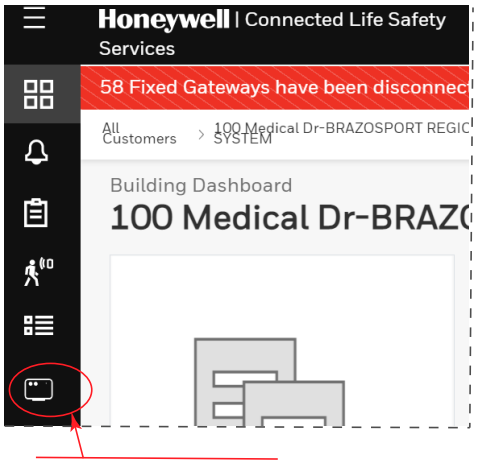

7. Select **Installed Gateways** and then go to the **INSTALLED GATEWAYS** section.

NOTE: To view only those gateways not yet activated, select **Show only Gateways without activations** at the right side.

5. Find the CLSS Gateway requiring alarm transmission from the gateway list shown.
6. Click on the specific CLSS Gateway of the building.
7. Click on the **Connected Gateway** activation card inside the selected gateway.
8. Click **Configure Now**.
9. Select the central station to configure from the central stations list.
10. Follow the on-screen instructions to enable the alarm transmissions.
11. Download the central station report.

NOTE: A central station report provides inventory and contact ID of a building. The report gives details, which the central station requires.

Verifying the Central Station Communication Configurations

After configuring for the central station communication, call the central station to confirm that the alarm transmission for the building is activated.

5.4.3 Dual Path Communication for Alarm Transmission

While configuring the central station communication, you can choose a single path or two paths for alarm transmissions. Reporting options are: LTE cellular only, IP only, IP Primary with LTE cellular backup, or LTE Cellular Primary with IP backup.

NOTE: Alarms will be sent through two among the following ports: Ethernet, Wireless, or Cellular.

Supervision Period

Dual paths are monitored for integrity at an interval period as per NFPA 72 requirements. In case of a failure, both the local premises and the central station receive a failure report with a unique code as in the central station report.

Transmission Options

Path Options	Supervision Interval
Single Path	
Cellular	5 Minutes
	60 Minutes
IP [a]	5 Minutes
	60 Minutes
Dual Path	
IP [a] and Cellular	5 Minutes
	60 Minutes

a IP can be an Ethernet or a wireless connection

Test Time Interval

The test time interval specifies the frequency when the *CLSS Gateway* should send a test event to its Central Station to confirm that the gateway is active. By default this testing is disabled, but you can enable it and specify the testing interval. If required, you could also disable it.

NOTE: A supervisory device performs the additional-level supervising of the pathways and performs this test. It can send only supervisory events and not the status events.

Examples:

Event Code	Description
602	Periodic Test Event With No Trouble
608	Periodic Test Event With Trouble

■ Test Interval Options

Path Options	Interval Period
Single Path	
Cellular	1 Hour
	6 Hours
	24 Hours[a]
IP[b]	1 Hour
	6 Hours
	24 Hours[a]
Dual Path	
IP[b] and Cellular	1 Hour
	6 Hours
	24 Hours[a]

a 24 hours is the default interval.
b IP can be an Ethernet or a Wireless connection.

■ To Specify the Test Time Interval

1. Go to your **Customer** > **Site** > **Building** in *CLSS Site Manager*.
2. Click at the left side for feature activation.
3. Find and click the required gateway from the **FIXED GATEWAYS** page.
4. Click **CONFIGURE NOW** at the bottom right.
5. Click and expand the **Direct Connect with Central Station** section.

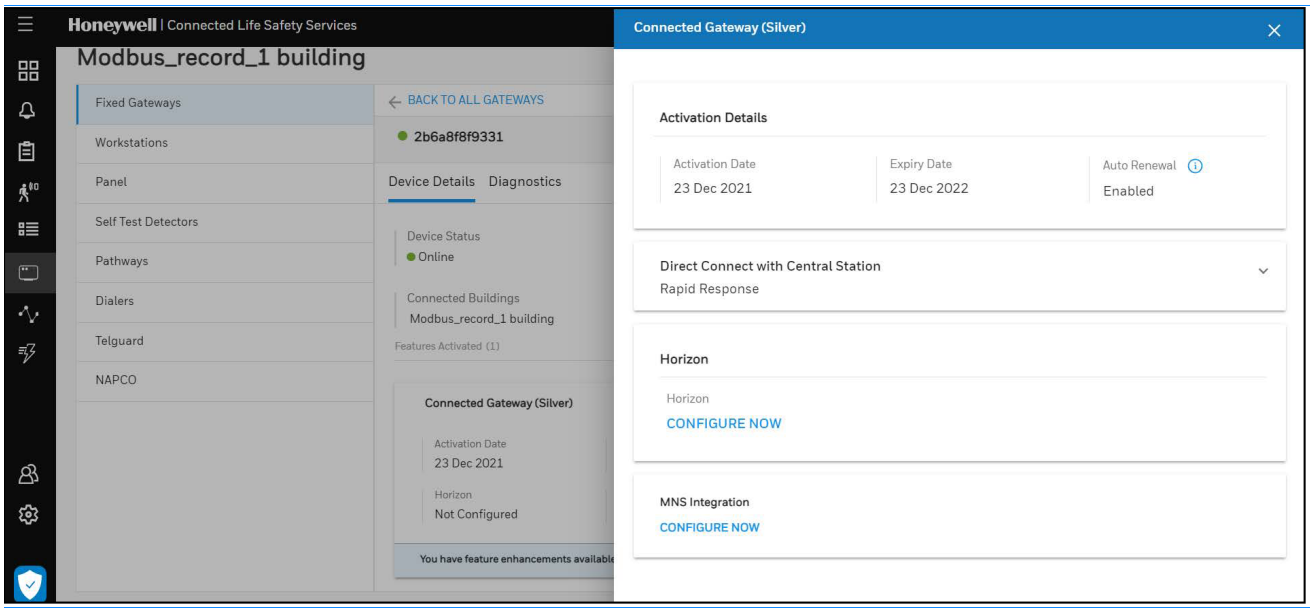

6. Click to edit the settings.
7. Select the test event frequency from the **Test Time Interval** field.
8. Click **APPLY**.

Event Exclusion

You can enable the *CLSS Gateway* to exclude only the Supervisory events transmitted to its Central Station. If excluded, the following Supervisory Type Codes are not sent:

- WATERFLOW S
- LATCH SUPERV
- NC SUP L
- TRACK SUPERV
- NC SUP T
- SPRINKLR SYS
- TAMPER
- RF SUPERVSRY

NOTE: By default, it is *disabled* and supervisory events are also sent.

■ To Exclude or Include the Supervisory Events

1. Go to your **Customer** > **Site** > **Building** in *CLSS Site Manager*.
2. Click at the left side for feature activation.
3. Find and click the required gateway from the **FIXED GATEWAYS** page.
4. Click **CONFIGURE NOW** at the bottom right.
5. Click and expand the **Direct Connect with Central Station** section.
6. Click **EVENT EXCLUSIONS(0)** at the bottom.
7. Select **Supervisory Events** to exclude the supervisory events.
   Or
   Clear **Supervisory Events** to include the supervisory events.
8. Click **APPLY**.

Section 6: Post-Installation Activities

The system maintenance provider is responsible for the maintenance and upkeep of the CLSS Gateway. The maintenance involves avoiding potential issues, making regular backups, restoring data when required, collecting data for troubleshooting, and other activities.

6.1 Upgrading the Gateway Firmware

CLSS Service Manager notifies the gateway administrators when a new firmware is launched. The administrators can perform the upgrade at a planned time.

CAUTION: BEFORE UPGRADING ENSURE TO GET PERMISSION FROM THE SITE. THE REBOOT AFTER THE UPGRADE SHOULD BE AT A MUTUALLY PLANNED TIME WITHOUT AFFECTING THE OPERATION.

The upgrade happens in the background while the system is running. After the upgrade the gateway will reboot.

CAUTION: PREVENT ANY DISTURBANCE TO THE POWER CABLE OF THE GATEWAY DURING THE UPGRADE

6.1.1 To Upgrade Before Commissioning the Gateway

1. Connect the gateway to Internet.

NOTE:
- The Internet connection can be either wireless or LAN.
- The LED indicator DL4 on the gateway flashing Green confirms Internet connection.

2. Log onto the *CLSS Site Manager*.
3. Click **VIEW** on the notification at the top.

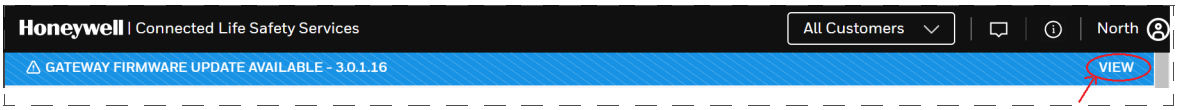

Or

Click the **SETTINGS** icon at the bottom left.

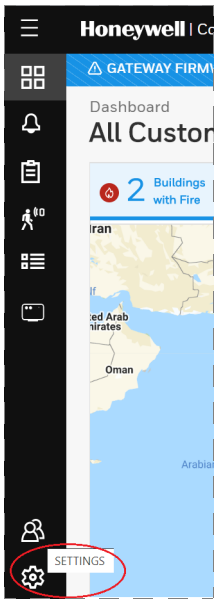

4. Click **Gateway Management** in the **Settings** page.
5. Click **Add Gateway** on top.

6. Enter the OC of the gateway in the **Add Gateway** dialog and click **ADD**.
7. Wait for the registration to complete.
8. Enter the OC of the gateway in the **Search OC** field to find the gateway to update.

   Or

   Scroll across to find the gateways to update.
9. Click **Update**.

6.1.2 To Upgrade After Commissioning the Gateway

1. Log onto the *CLSS Site Manager*.
2. Click **VIEW** on the notification at the top.

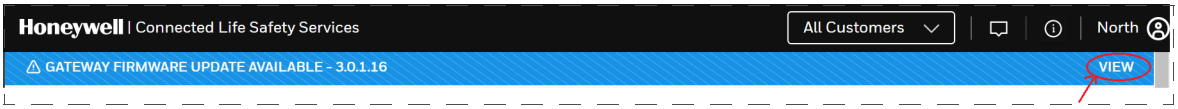

   Or

   Click the **SETTINGS** icon at the bottom left.

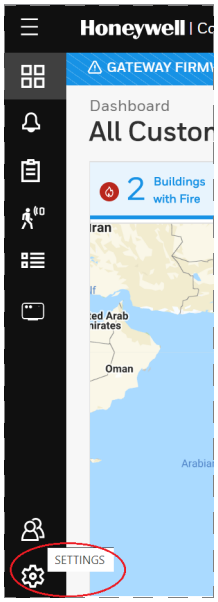

3. Click **Gateway Management** in the **Settings** page.
4. Enter the OC of the gateway in the **Search OC** field to find the gateway to update.

   Or

   Scroll across to find the gateways to update.
5. Click **Update**.

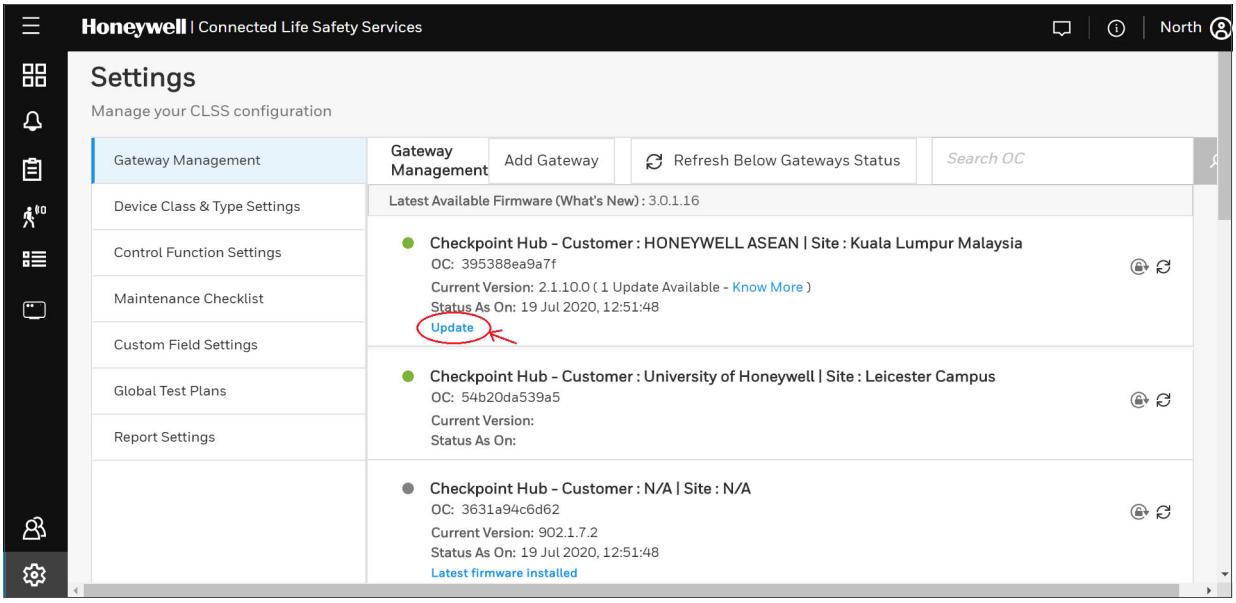

Figure 6.1: Firmware Upgrade

6.1.3 To Locally Upgrade with a PC

1. On the gateway side, connect an Ethernet cable to the Ethernet port (J3). The port is labeled as 2 in Figure 4.3.
2. On the configuration computer side, connect the Ethernet cable to the configuration computer's Ethernet port.
3. On the gateway board, find the S6 button.
4. To switch to the configuration mode, press and hold the S6 button for a minimum of 6 seconds, and then release it. The LED indicator DL3 turns ON and SOLID, indicating that the configuration is enabled.
5. Open the Chrome browser and enter the following IP address for the configuration tool: **https://192.168.10.190:9443/config/index.html**
6. In the **Sign In** page, enter the password.

NOTE: The default password is: Welcome123

7. In the list of settings options, click **Diagnostic**.
8. In the **GATEWAY FIRMWARE UPGRADE** section, click **Choose File**.
9. Select the firmware image file and click **Choose**.
10. Once the chosen file is uploaded, click **Upgrade**.

6.1.4 To Verify the Upgrade

1. After the restart, log into the configuration tool.
2. Click **Diagnostic**.
3. Click **About** and verify that the new version of the gateway firmware is shown.

6.1.5 LED Indications During the Upgrade

While the gateway is downloading the firmware, the Green-color LED indicator DL4 will be ON.

If an LED is indicating differently, refer Table 2.2 to determine the operational status. If necessary, refer to the 6.2, "Troubleshooting" section to fix the problem or contact Honeywell Technical Support.

6.2 Troubleshooting

Issues that may occur during the gateway's operation can be resolved on your own using the tables below or by contacting Honeywell Technical Support. The issues can be either LED-indicated issues or other issues.

6.2.1 To Troubleshoot LED-Indicated Issues

When an LED status indicates issues, refer to the below table to determine their possible fixes.

Table 6.1: LED-Indicated Issues and Possible Fixes

SOM: Power LED-Indicated Issues		
Power LED Status	**Other LEDs' Status**	**Possible Fixes**
OFF	All other LEDs are OFF	• Ensure that the gateway board's power source is supplying the required 24V DC power.
ON	All other LEDs are OFF	• Do the following: 1. Remove all the connected cables. 2. Wait for one minute. 3. Reconnect all the cables. 4. Ensure that the gateway board is getting its 24V DC power. If the above steps do not fix the issue, contact Honeywell Technical Support.

DL2: Trouble LED-Indicated Issues		
Trouble LED Status	**Other LEDs' Status**	**Possible Fixes**
ON and SOLID Amber	Any	It is a critical issue. Contact Honeywell Technical Support.
Flashing Amber once per second	• **DL3** The panel LED is OFF • **DL4** The *CLSS Site Manager* LED is flashing once per second	Check the following and correct if necessary: • The cable connections at the gateway's port and at the panel's port • The cable connecting the gateway board and the panel
Flashing Amber once per second	• **DL3** The panel LED is flashing once per second • **DL4** The *CLSS Site Manager* LED is OFF	Check the following and correct if necessary: • Internet connectivity • Eth1 cable connections at the gateway board side and at the panel side • The Eth1 cable

DL3: Panel LED-Indicated Issues		
Panel LED Status	**Other LEDs' Status**	**Possible Fixes**
OFF	• **DL2** The Trouble LED is OFF	Check the following and correct if necessary: • The cable connections at the gateway board side and at the panel side • The Eth2 cable connecting the gateway board and the panel

Table 6.1. LED-Indicated Issues and Possible Fixes (Continued)

DL4: *CLSS Site Manager* LED-Indicated Issues		
***CLSS Site Manager* LED Status**	**Other LEDs' Status**	**Possible Fixes**
Flashing Green every 0.25 second	• **DL3** The panel LED is flashing once per second • **DL2** The Trouble LED is OFF	• Associate the gateway board with the user account. • Ensure that the user account is active. • Ensure that the panel's date and time are correct.

DL5: Wireless LED-Indicated Issues		
Wireless LED Status	**Other LEDs' Status**	**Possible Fixes**
OFF	• **DL3** The panel LED is flashing once per second • **DL4** The *CLSS Site Manager* LED is OFF	• Ensure that the WLAN settings in the gateway configuration tool are correct. • Ensure that the building's IP network has Internet and *CLSS Site Manager* connectivity.

DL6: Mobile LED-Indicated Issues		
Mobile LED Status	**Other LEDs' Status**	**Possible Fixes**
OFF	• **DL3** The panel LED is flashing once per second • **DL4** The *CLSS Site Manager* LED is OFF	1. On the gateway board, find the S8 button. To find the S8 button, refer to Figure 2.1. 2. Press the S8 button until the LED indicator DL6 flashes fast, indicating enabled mobile connectivity.

6.2.2 To Troubleshoot Other Issues

If there are issues, which are not shown by the LEDs, refer to the below table to determine their possible fixes.

Events-Related Issues		
Issue Description	**Possible Causes**	**Possible Fixes**
Panel events are not displayed on the *Connected Life Safety Services* App	The gateway is dissociated.	Associate the gateway board with the user account.
	The user account is not associated with the gateway.	Ensure that the user account is active.
	The panel's date and time are incorrect.	Ensure that the panel's date and time are correct.
Active event sync failed	Attempting to get *Active Events* from an ESSER panel using a *Remote Access* connection would fail. The *Remote Access* connection on RS232 does not get *Active Events*.	To get *Active Events*, make a WINMAG connection on RS232 or RS485 in the ESSER panel. Refer to the ESSER Panels section to make a WINMAG connection.

Events-Related Issues		
Issue Description	**Possible Causes**	**Possible Fixes**
There is a need to reset the default password of the *Gateway Configuration Tool*	Forgot the *Gateway Configuration Tool*'s password	To reset to the default password: 1. Log into the *CLSS Site Manager*: https://www.fire.honeywell.com 2. Click on the settings icon at the bottom-left section. 3. Click **Gateway Management** in the **Settings** section. 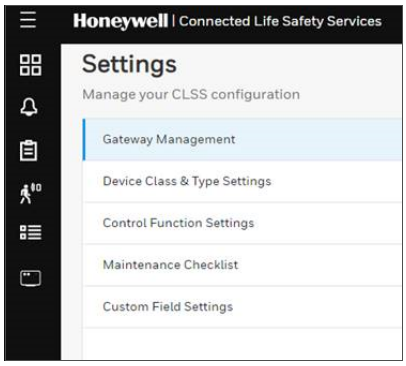 4. Find the gateway whose configuration tool password needs to be reset. 5. To ensure that the gateway is online, check that there is a green icon before the gateway name. 6. Click on the reset password icon at the right-side of the gateway name. 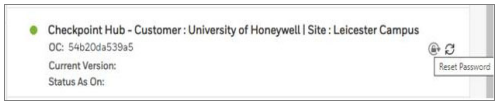 7. To confirm the reset, click **CONTINUE** on the message displayed. 8. Wait for the confirmation message. 9. Log in using the default password: Welcome123
There is a need to reset the gateway board to its factory default settings	An unusual situation requires reverting to factory default settings.	Contact the Honeywell Tech Support for a guided procedure.
The CLSS App could not pair with the gateway.	The gateway firmware is not updated to 2.1.11.16 or above.	Upgrade the firmware to 2.1.11.16 or above.
Trouble IN SYSTEM ANN-PRI COMM FAULT DDEV #: ALL DEVICES	The ANN-PRI communication cable is not connected to the panel.	Connect the ANN-PRI communication cable with the panel.

Section 7: Modbus Communications

The CLSS Gateway can use a third-party client to monitor the nodes inside a Modbus LAN network, and send alarm and event data of these nodes for the CLSS users.

NOTE: The Modbus interface provides supplementary data to the third party client.

7.1 Operation

The CLSS Gateway acts as a slave device to a Modbus master application and offer the Modbus monitoring functionalities to the CLSS Gateway users.

7.2 Functionality

With Modbus configurations the CLSS Gateway can:

- Support Modbus Application Protocol Specification V1.1b.
- Monitor up to 10 FACPs.
  Note: Additional FACPs require additional CLSS Gateways to the network.
- Support a maximum of 2 Modbus clients or masters.

7.3 Recommended Cybersecurity Practices

- Follow the highly-recommended cybersecurity practices specified in the *Cybersecurity Manual* (LS10217-000NF-E).

CAUTION: FAILURE TO COMPLY WITH THE RECOMMENDED SECURITY PRACTICES IS A CYBERSECURITY RISK TO YOUR SYSTEM.

- Ensure that all the network security best practices discussed in Section 3, "Security Recommendations" are followed.

7.4 Required Software

- Chrome™
- Java™ version 6 or above

7.5 IP Requirement

7.5.1 IP Port Settings

The following IP ports must be available for the CLSS Gateway:

Table 7.1: Required IP Ports

Port	Type	Direction	Purpose
80	TCP	In	Web Based Configuration
443	TCP	In	HTTPS Communications
502	TCP	In	Modbus
4016	TCP	In	Upgrades

7.5.2 IP Restrictions for the Gateway

- Assign a static IP address.

NOTE: Dynamic Host Configuration Protocol (DHCP) is supported, but not recommended.
Before using DHCP with LAN for Intranet connection, consult the network administrator of the Site.

- Following are not supported:
  - Web access through an HTTP proxy server
  - Use of a NAT (Network Address Translation)

7.6 Bandwidth Calculation

Use the following information to calculate the network bandwidth CLSS Gateway usage requires and how it will impact the network.

Table 7.2: Total Required Bandwidth

For TCP Request	
Description	**Bytes**
Ethernet Header	14
IP Header	20
TCP Header	20
MBAP Header	7
Message—5 bytes Function code (1) + Start Address (2) + Quantity of Registers (2)	5
Total Bytes	66

For TCP Response	
Description	**Bytes**
Ethernet Header	14
IP Header	20
TCP Header	20
MBAP Header	7
Message—Function code (1) + Byte Count (1) + Max 100 registers of each 2 Bytes (200)	202
Total Bytes	263

Requirements for the Calculation

- One request and response pair requires 329 Bytes (66 + 263).
- If a client is polling at one second intervals, then request and response are both possible in one second.
- A request and response pair creates network traffic of 329 Bytes per second (329 x 1).
- In other words, a request and response pair creates network traffic of 2632 bits per second (329 x 8).
- Therefore, the network must be able to accommodate at least 0.0027 Mbps data flow.
- Once every five seconds, an analog request adds a small amount of network traffic.
- Formula for CLSS Gateway network bandwidth requirement based on polling rate:

Bandwidth Requirement = *(329 x (1000/polling rate in milliseconds) x 8) / (10 ^ 6) Mbps*

7.7 System Architecture

An Internet or Intranet IP network connection is needed for the architectures described here.

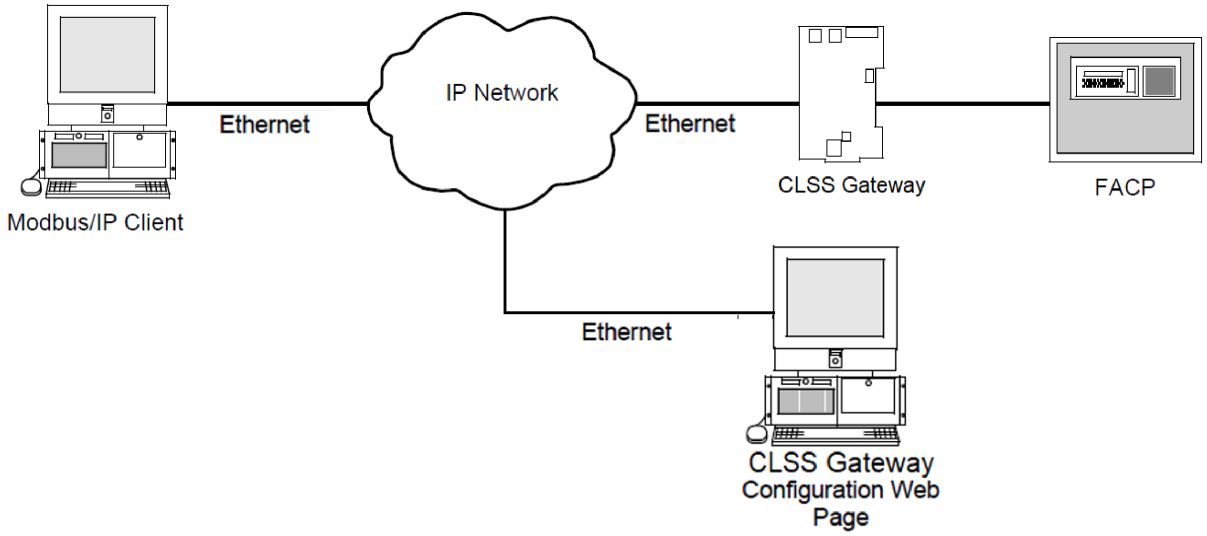

Figure 7.1: Single Panel Architecture

7.7.1 Network of Panels

NOTE: Below illustration shows a sample topology. Refer to the Connecting to the Panels section for panel-specific connection details.

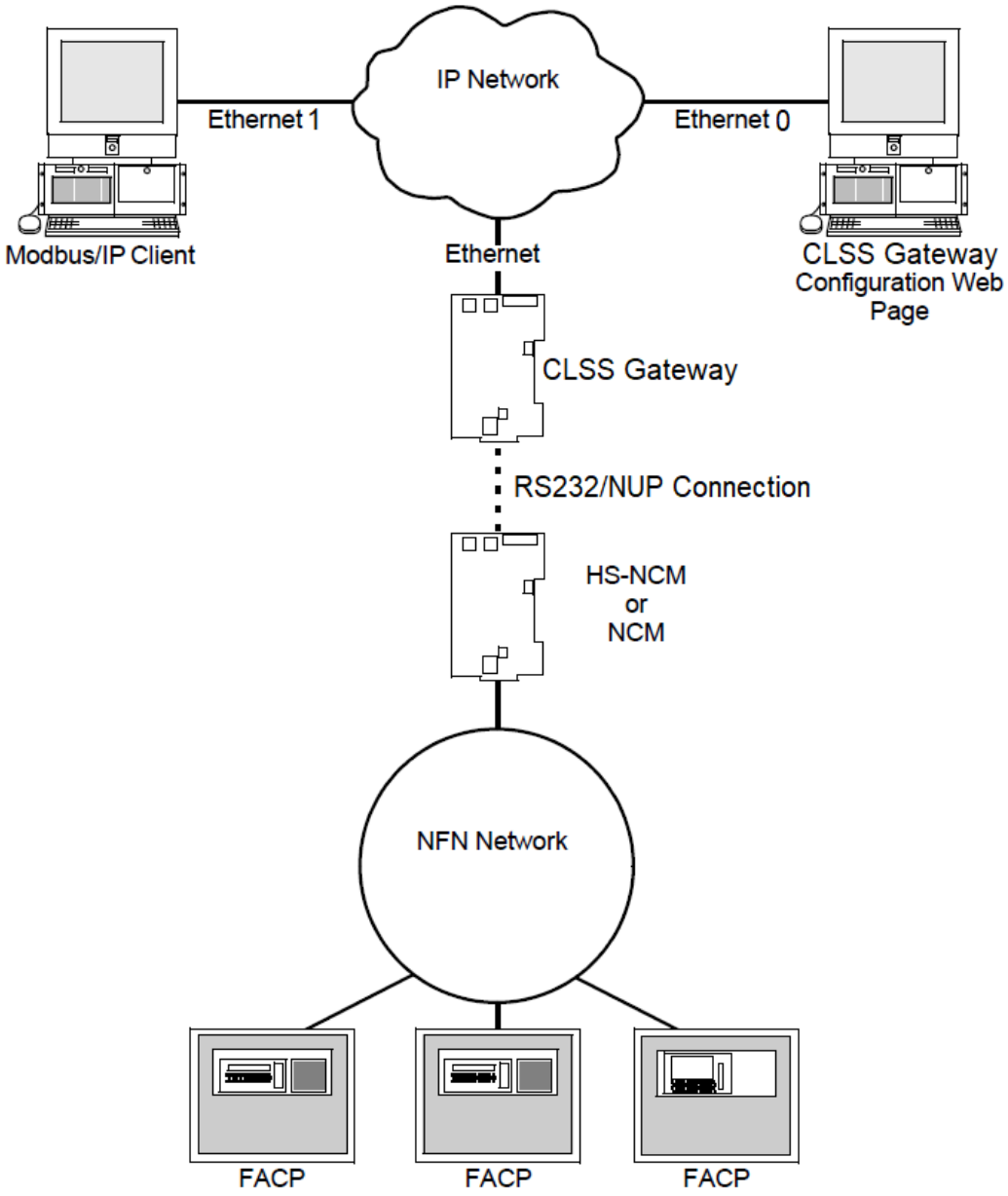

Figure 7.2: NFN Network Architecture

7.7.2 Redundancy

A redundant gateway is a second gateway, which communicates with a Modbus client.

CAUTION: THE FIRST AND SECOND GATEWAYS MUST HAVE DIFFERENT NODE NUMBERS AND DIFFERENT IP ADDRESSES.

An Example

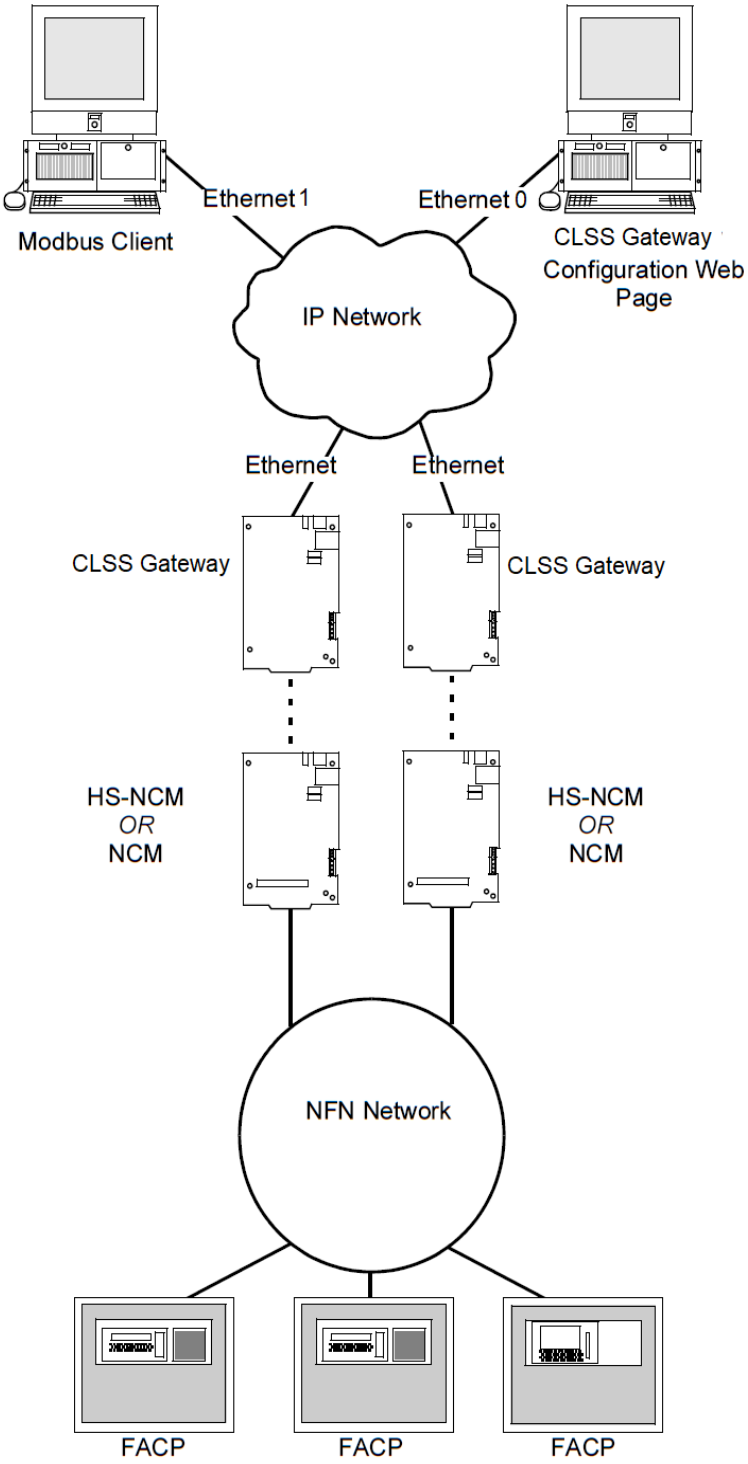

Figure 7.3: Redundant CLSS Gateways

7.7.3 NFN Legacy Modbus Gateway

A panel's network might already be using a Modbus gateway in its network. You can add the CLSS Gateway to the network or replace the legacy Modbus gateway with the CLSS Gateway.

Replacing the Modbus Gateway (Modbus-GW)

Following changes occur when the CLSS Gateway replaces the Modbus Gateway in the network.

NOTE: To know the Modbus Gateway values of the following, refer to the document: *LS10015-000NF-E Rev. C2*.

■ The Mapping of Registers

The CLSS Gateway and the Modbus Gateway have different mapping of registers.

Example:

The register range for loop-1 detectors:

In the Modbus Gateway: 40001 to 40200

In the CLSS Gateway: 40001 to 40300

Change the client-side scripting as required to change to the registry mapping of the CLSS Gateway.

For register mapping details for the CLSS Gateway, refer to the 7.20 "Register Mapping" section.

■ Device Types

The device types are different for these two gateways.

Example:

Device Type value of Heat detector:

In the Modbus Gateway: 1

In the CLSS Gateway: 0100H

For device type details for the CLSS Gateway, refer to the 7.28 "Device Types" section.

■ System Troubles

There are new troubles in the CLSS Gateway, and some of the system trouble names are different.

Example 1: New Troubles

In the CLSS Gateway: 460016-12th bit is *Workstation Failure*.

Example 2: Different trouble name

In the Modbus Gateway: The *General PS Fault* and the *Power Supply Trouble* are two different events.

In the CLSS Gateway: The 460015 - 8th bit is one single event for these two.

For system trouble details for the CLSS Gateway, refer to the Table 7.29, "System Troubles Register Map".

Using Both the CLSS Gateway and the Modbus Gateway

Ensure the following:

- The *Node Number* of the CLSS Gateway should be different from other gateways in the network.
- The *IP address* of the CLSS Gateway should be different from other gateways and devices in the network.

NOTE: The changes described in the "Replacing the Modbus Gateway (Modbus-GW)" section are applicable for this setup also.

7.8 Agency Listings and Approvals

- UL/ULC Listed: S35608
- CSFM: 7300-1637:0504
- FDNY: COA#000121, COA#000122

7.8.1 Agency Restrictions and Limitations

- CLSS Gateway is UL 864 and ULC-S527 listed for supplementary use only.

7.9 Standards

■ Compliance

This product has been investigated to, and found to be in compliance with, the following standards:

Underwriters Laboratories

- UL 864 - Control Units for Fire Alarm Systems, Tenth Edition

Underwriters Laboratories Canada

- CAN/ULC S527-19 - Standard for Control Units for Fire Alarm Systems, Fourth Edition

■ Installation

This product is intended to be installed in accordance with the following:

Local

- AHJ - Authority Having Jurisdiction

National Fire Protection Association

- NFPA 70 - National Electrical Code
- NFPA 72 - National Fire Alarm and Signaling Code

Underwriters Laboratories Canada

- CAN/ULC S527 - Installation of Fire Alarm Systems
- CAN/ULC S561 - Installation and Services for Fire Signal Receiving Centres and Systems

Canada

- CSA C22.1 - Canadian Electrical Code, Part I, Safety Standard for Electrical Installations

7.10 Compatible Equipment

The CLSS Gateway is compatible with the following equipment:

Table 7.3: Compatible Equipment List

Type	Equipment
Fire Panels	• AFP 3030 • AFP2800 • AM-MA Series • GW-FCI S3 • GW-FCI E3 • N16 (INSPIRE) • NFS-3030 • NFS-320 • NFS-640 • NFS2-3030 • NFS2-640 • NOTIFIER-EN ID3000 • NOTIFIER-EN Pearl • XLS 120 • XLS 140-2 • XLS 2000 • XLS 3000
Network Cards	• NCM-F, NCM-W • HS-NCM-MF, HS-NCM-MFSF, HS-NCM-SF, HS-NCM-W, HS-NCM-WMF, HS-NCM-WSF • HS-NCM-W-2, HS-NCM-WMF-2, HS-NCM-WSF-2, NFN-GW-PC-NHW-2
Other Products	Unmonitored but network compatible. • Legacy Gateway • DVC • NCA-2 • NCD • NFN-GW-EM-3 • NFN-GW-PC-F • NFN-GW-PC-HNMF • NFN-GW-PC-HNSF • NFN-GW-PC-HNW • NFN-GW-PC-HNW-2 • NFN-GW-PC-W • NWS-3 • PC NFN Gateways • VESDA-HLI-GW

7.11 Modbus Feature Activation

Purchase the required number of Modbus support on *CLSS Site Manager* and then activate that feature in CLSS App.

NOTE: Purchase should be within the number of tokens available.

7.11.1 To Purchase the Modbus Support

1. Log onto *CLSS Site Manager*.
2. Click on your account name and select **Manage Access**.

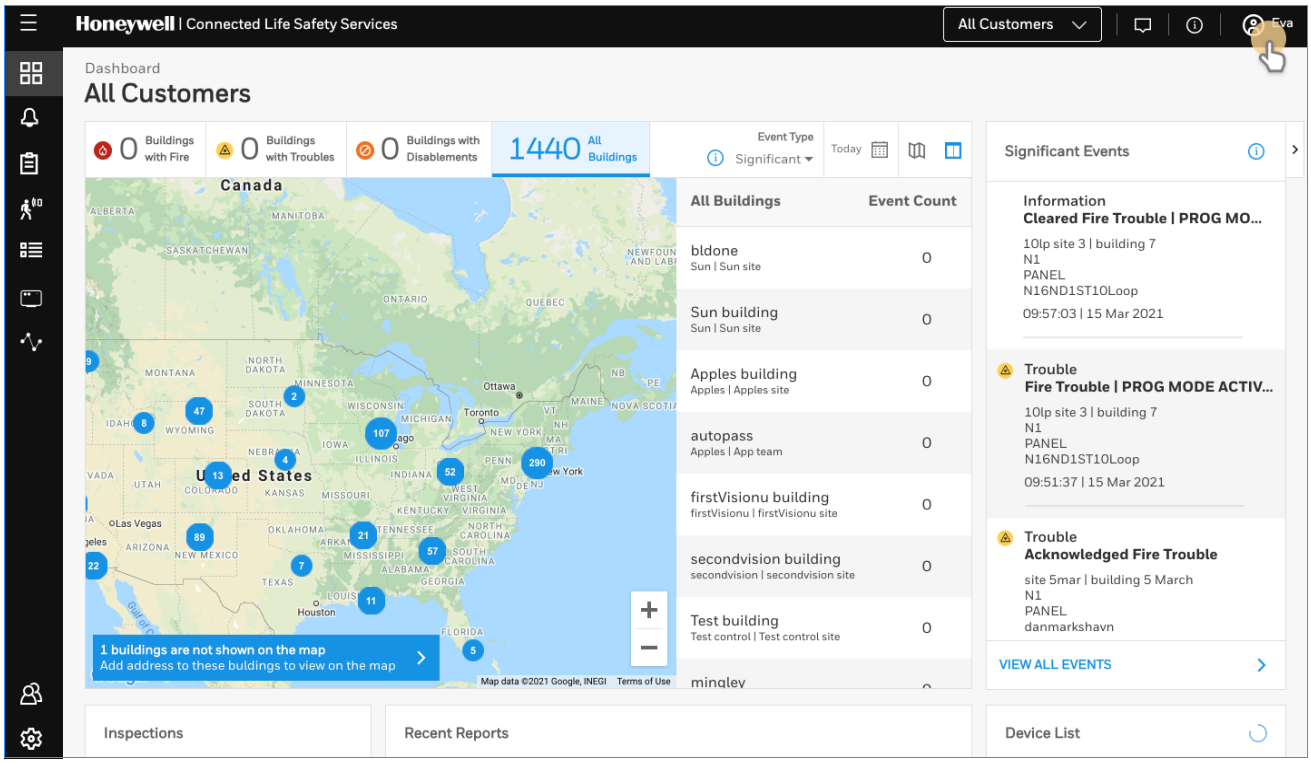

Figure 7.4: Selecting Manage Access

3. Click **Features** on the **Manage Access** page.
4. Click **Gateway** under the **Features** section.
5. Note down the purchased number under **Available Features**.
6. Click **PURCHASE** at the top right side.

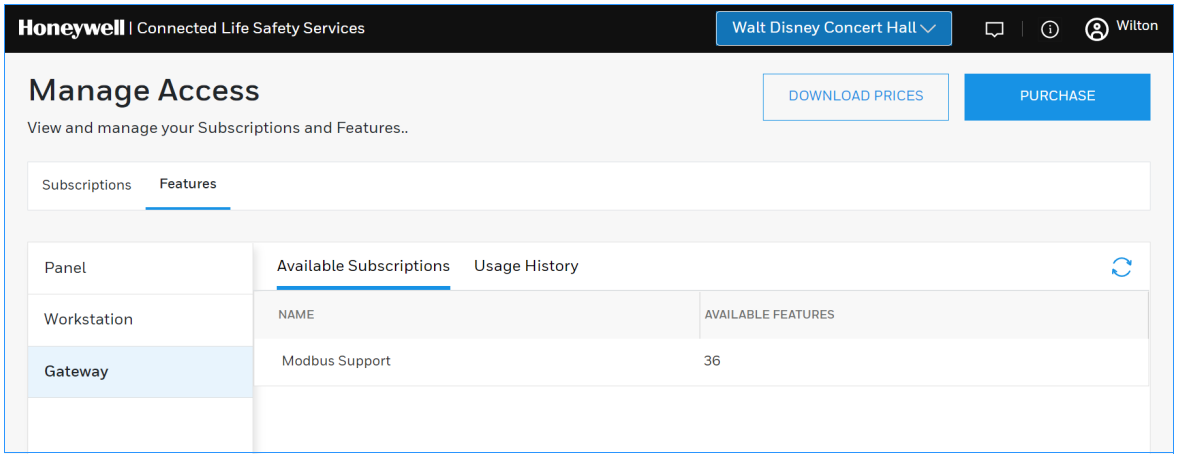

Figure 7.5: Purchasing the Modbus Support

7. Scroll down to find **Modbus Support** in the **Features** tab.
8. Enter the number of support required in the **Modbus Support** field.
9. Click **PURCHASE**.
10. Read the **Confirmation** message and if acceptable, click **CONFIRM**.
    Or
    Click **CANCEL** and repeat the steps from 8 to 10.
11. Wait for the purchase to complete and refresh the page, if required.
12. Verify that the purchased number under **Available Features** is correct.

7.11.2 To Activate the Modbus Support

NOTE:
- The gateway must be already installed. If not, install the fixed gateway.
- All the network settings should be configured while installing.

1. Tap **Perform Feature Activation** on the CLSS App's welcome message.

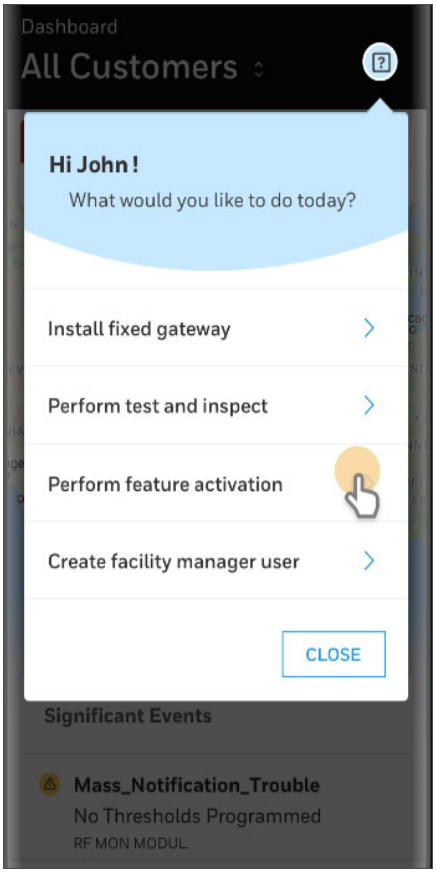

Figure 7.6: Feature Activation: The First Step

2. Tap **Fixed Gateways**.
3. Select the site of the gateway.
4. Find and tap the OC of the gateway.
5. Tap **ADD ACTIVATION**.
6. Tap **Modbus Support** under the **One Time Activations**.
7. Tap **ACTIVATE**.
8. Wait for the activation successful message.

7.12 Installation and Configurations

The CLSS Gateway can communicate with the Modbus client in an Ethernet LAN.

7.13 The IP Settings

The following information applies to IP settings:

- You can use only the *eth1* port for connections to Modbus clients. For more details, refer to 7.15 "To Configure the Modbus Settings".
- Each CLSS Gateway is shipped with a default node number of 235.
- The computer used to configure the CLSS Gateway must establish an IP connection to the gateway. Consult with a network administrator if unsure how to make this connection.
- Connecting more than one CLSS Gateway prior to reconfiguring the IP address will result in an IP address conflict.

7.14 To Connect with the Modbus Client

1. At the CLSS Gateway side, connect an Ethernet cable to the Ethernet Port 1.

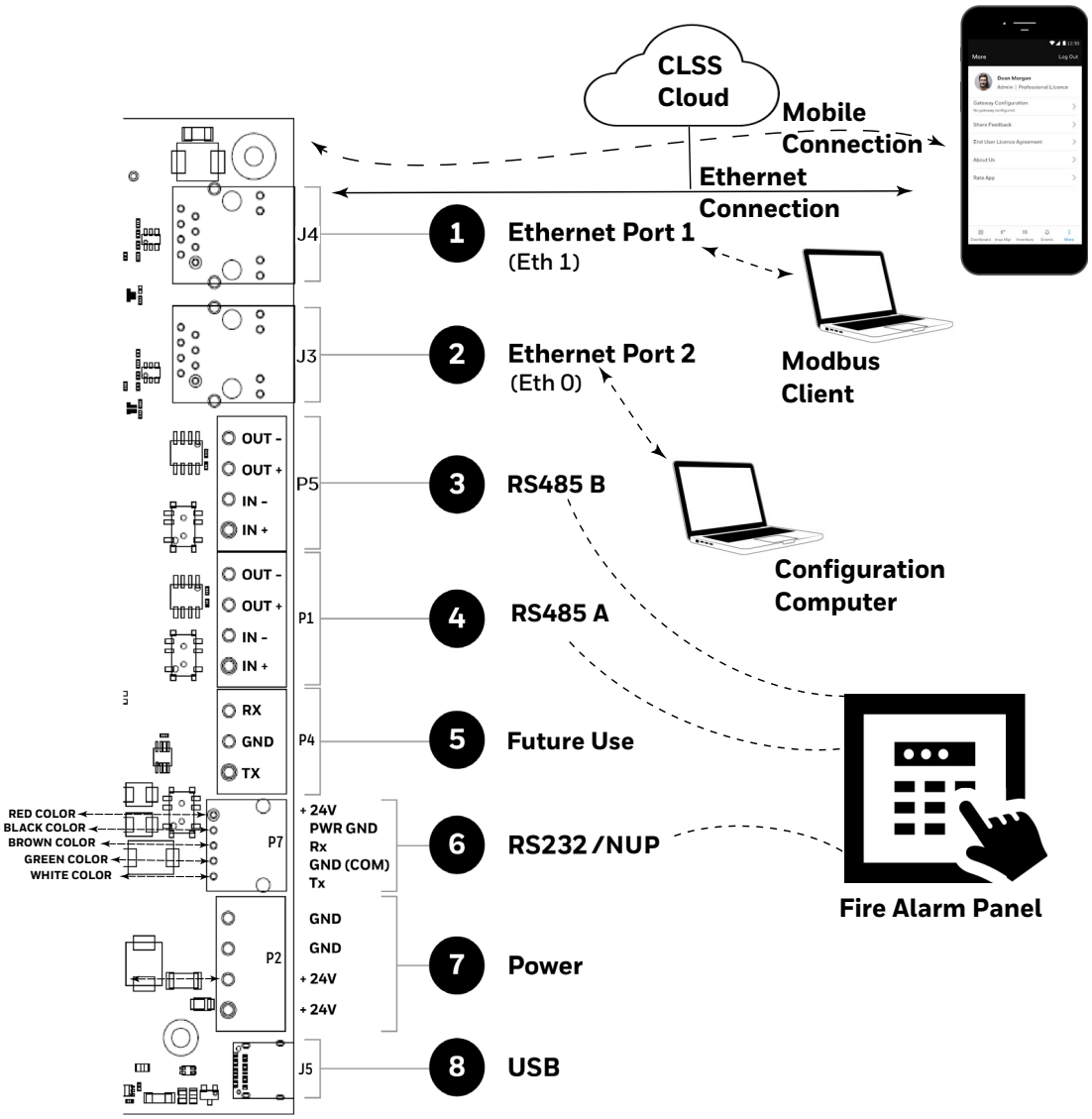

2. At the Modbus client side, connect the other end of the Ethernet cable to the system running the Modbus client.

7.15 To Configure the Modbus Settings

1. On the CLSS Gateway board, find the S6 button.
2. Press the S6 button for a minimum of 6 seconds and then release it. It will switch the gateway to configuration mode.
   The LED indicator DL3 turns ON and SOLID indicating that the configuration is enabled.
3. Connect the Ethernet cable to *Eth0* for enabling web configuration.

NOTE: The web configuration is available only on *Eth0*.

4. Open the Configuration Computer connected to the *Eth0* port of the gateway.

NOTE: The static IP of the *Eth0* port is *192.168.10.190*.

5. In the Chrome browser, enter the following URL:
   https://192.168.10.190:9443/config/index.html
6. Do the following if any security warning is shown. Otherwise, go to step 7.
   1. Click the *Advanced* link below the error message.
   2. Agree to proceed.
7. In the **Gateway Configuration Tool** page, enter the password.

NOTE: The default password is: Welcome123

8. Go to the **Network Settings** in the **Gateway Settings** section.
9. Assign the *Eth1* port with a static IP address for the Modbus connection.
10. Connect the Ethernet cable between the *Eth1* port of CLSS gateway and its LAN device.
11. Find and click **Modbus Settings** in the **Gateway Settings** section.

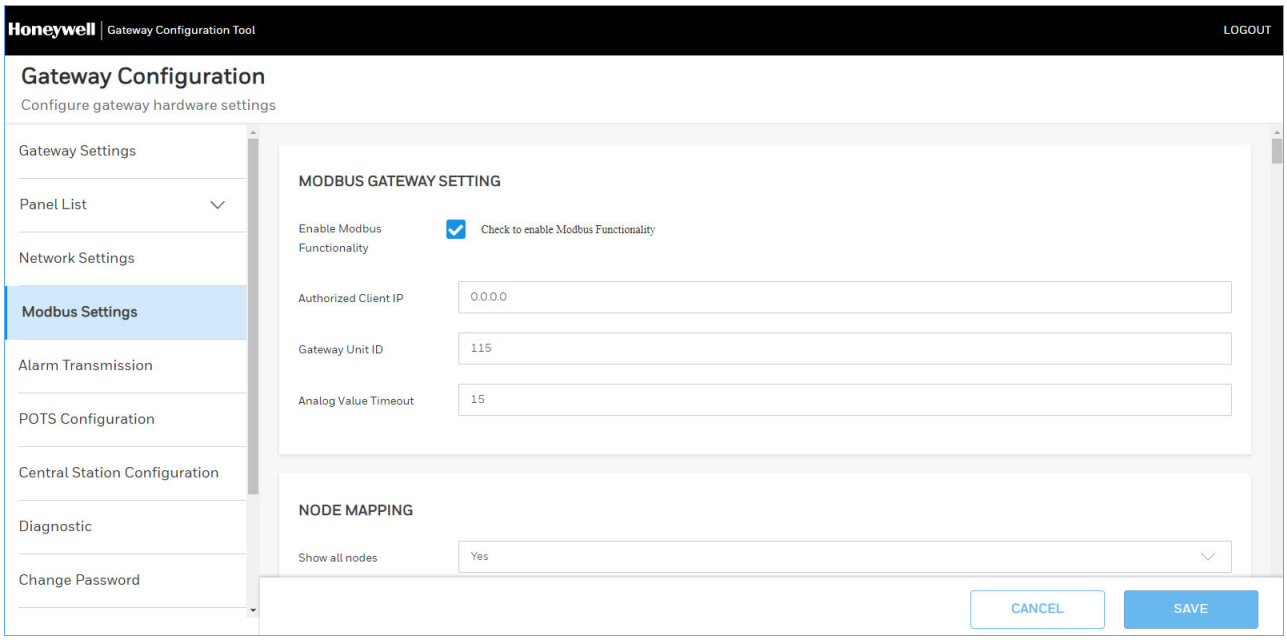

12. In the **MODBUS GATEWAY SETTING** page, provide the required details for the Modbus client.

Table 7.4: Settings for Modbus Client Communications

Field	Description
Authorized Client IP	This is an optional security feature. • Enter the authorized client IP address. The gateway only responds to requests from the client at that IP – no other Modbus clients may communicate with the gateway. However, any computer running a browser in the local network will still be able to access the CLSS Gateway configuration web page as normal. Or • Enter 0.0.0.0 to allow up to 2 clients to connect at a given time.
Gateway Unit ID	Displays the unit ID that the CLSS Gateway uses in the Modbus network. This is a configurable property of the nodes. By default, the Modbus Unit ID for a monitored node is set to be the same as the NFN Node ID. If for any reason the unit ID needs to be changed, click the value and enter the new unit ID number. Since each unit ID in the Modbus network needs to be unique, change this number only if there is a conflict in the unit IDs in the Modbus network. **Note**: Each of the 240 possible nodes on the NFN network (except for gateways, web servers, and DVCs) is automatically assigned a Modbus Unit ID. When a new unit ID number for a node is entered, the old unit ID number is reassigned to whichever node previously used the new unit ID number. However, the CLSS Gateway configuration web page does accept a new unit ID number that is currently being used by a monitored node. In order to reassign a unit ID number used by a monitored node, first assign a new unit ID number for the monitored node.
Analog Value Timeout* *Only for Notifier UL NFS 3030-2 panel.	Enter the minimum frequency (in seconds) at which the CLSS Gateway expects to receive continuing polls from clients seeking analog values from 4-20 mA devices. When a client that had been polling a set of analog values fails to re-poll the values within the time out period, the CLSS Gateway stops polling the points in question. Once the time out period expires without the CLSS Gateway receiving a repeated poll, any further poll received will be treated as a new poll, and the first read will be considered an initialization read. Default value is 15 seconds.
NODE MAPPING	
Show All Nodes	• Select **Yes** to display all the nodes in the network. • Select **No** to display only the nodes that the panel monitors in the network.
Node Status	Shows the operational status of each nodes displayed. It would be *Online* or *Offline*. Note: The Gamewell-FCI, AM-MA Series, and NOTIFIER EN panels do not yet support this feature.
Node ID	Displays the number of each node in the network.

Table 7.4: Settings for Modbus Client Communications *(Continued)*

Field	Description
Node Type	Shows the brand name of the node. For example, NFS2-3030.
Node Unit ID	Displays the unit ID that each node uses on the Modbus network. If for any reason the node unit ID needs to be changed, click the value and enter the new Modbus network unit ID number (1-240). Since each unit ID in the Modbus network needs to be unique, change this number only if there is a conflict between unit IDs in the Modbus network. If a unit ID number is changed to a number already assigned to another node, the node currently having that unit ID number swaps the unit ID number with the node that was changed. Example: The node assigned Unit ID #214 is changed to be Unit ID #5. The result is that the node that was Unit ID #214 is now #5 and the node that was Unit ID #5 is now #214. However, the CLSS Gateway configuration web page does accept a new unit ID number that is currently being used by a monitored node. In order to reassign a unit ID number used by a monitored node, first assign a new unit ID number for the monitored node. **Notes**: The *Unknown* nodes can only be seen in the *Show All Nodes* mode. If an *Unknown* node comes on line and is found to be of the wrong type for the CLSS Gateway to monitor, its Monitored field is automatically set to *No*. Some nodes in the node list are not usable by the CLSS Gateway and therefore are not configurable and do not have a unit ID.
Monitoring	• Select **Yes** to monitor the node. • Select **No** if the node is not to be monitored. At a given time, up to 10 nodes* can be monitored. * Excluding the CLSS Gateway.
MODULES MAPPING* * Modules mapping for channels is only for Notifier EN (ID3000 and Pearl) panels and AM-MA Series panels.	
Normal	300 detectors and 300 modules with 12 channels
Special	300 detectors, and • 1 - 15 modules with 12 channels • 16 - 40 modules with 3 channels • 41 - 300 modules with 2 channels
MODBUS TOOLS	
Control Functionality	1. Go to **Modbus Tools** in **Modbus Settings**. 2. Enable or disable as needed in the control functionality. 3. Read the UL Void message shown, if enabled. 4. Click **Save** to save it. 5. Wait until the CLSS Gateway shows the changes.
CSV REPORTS DOWNLOAD	
Actual Points	Click **Download** to download details of points (detectors and modules), which the panel monitors. The downloaded details will be in the CSV format.

Table 7.4: Settings for Modbus Client Communications *(Continued)*

Field	Description
All Points	Click **Download** to download details of monitored and unmonitored points. The downloaded details will be in the CSV format.
CONNECTED CLIENTS	
Show Connected Clients	Click **Show** to view all the clients connected to the Modbus master application.

13. Click **SAVE**.
14. Press the S6 button again until the LED indicator DL3 changes from ON to flashing.

NOTE: The configuration changes are enabled only after the gateway changes from the configuration mode to operational mode.

7.16 To Configure the Modbus Client

1. Open the Modbus master application you are using.
2. Specify the IP address of *Eth1* port of the CLSS Gateway.
3. Specify the port that the Modbus client is using in the **Service Port** field.

7.17 Modbus Command Support

The CLSS Gateway supports the following Modbus commands:

- Read Input Registers (0x04)
- Read Holding Registers (0x03)
- Write Single register (0x06)
- Read Device Identification supported 43 / 14 (0x2B / 0x0E)

Exception Responses

The CLSS Gateway sends exception responses to its Modbus clients as appropriate (e.g., invalid command, invalid data, etc.). For more information, refer to 7.26 "Exception Responses".

Modbus Addressing

The CLSS Gateway uses Modbus addressing within the following guidelines:

- The CLSS Gateway operates similarly to a Modbus bridge. Each CLSS Gateway can support up to ten panels on a network. The Modbus master addresses each fire panel in the panel's network with a Unit ID.
- The Unit ID used in the CLSS Gateway must be in the range 1 to 240. This is a Modbus range limitation.
- The Unit ID should match the node number of the node, which is being addressed. For example, a Unit ID of 127 addresses node 127.
- The CLSS Gateway communicates on standard Modbus IP port 502.

NOTE: Communication on Modbus IP port 502 is not configurable and is a Modbus norm.

- Standard register types and reference ranges are:
  - 0x Coil 000001–065536
  - 1x Discrete Input 10001–165536
  - 3x Input Register 300001–365536
  - 4x Holding Register 400001–465536

For more information on Modbus addressing, See "Register Mapping" on page 71.

7.18 CLSS Gateway Control Feature

7.18.1 Enabling the Control

CAUTION: UL LISTING
ENABLING CONTROL VOIDS THE UL LISTING OF THE CLSS GATEWAY.

CLSS gateway control is enabled through a web page-based configuration tool running on the gateway. Enable control as follows:

1. Start the web browser on a computer that is in the same IP network as the CLSS Gateway.
   Note: Chrome is the recommended browser.
2. Enter the following URL in the browser:
   https://192.168.10.190:9443/config/index.html
3. Do the following if any security warning is shown. Otherwise, go to step 4.
   - Click the **Advanced** link below the error message.
   - Agree to proceed.
4. In the **Gateway Configuration Tool** page, enter the password.
5. Go to **Modbus Tools** in **Modbus Settings**.
6. Enable or disable as needed in the control functionality.
7. Read the **UL Void** message shown, if it is enabled.
8. Click **Save**.
9. Wait until the CLSS Gateway shows the changes.
10. Check that the changes are correct.

7.18.2 Control Commands

Using the CLSS Gateway you can send relevant command values to the holding registers of Points, Panels, and Zones. For detailed register mapping information refer to the 7.20 "Register Mapping" section.

The following tables display the values representing all the command types for nodes, points, and zones.

NOTE: Refer to the Register Mapping section for detailed register mapping information.

For NOTIFIER UL

Table 7.5: Device Commands

Command	Value	Holding Register
Acknowledge	0x0100	Use Device/Module Holding Register Address
Disable	0x0200	
Enable	0x0400	
Activate*	0x0800	
Deactivate*	0x1000	

Table 7.6: Panel Commands

Command	Value	Holding Register
Reset	0x0001	20001
Silence	0x0002	

Table 7.7: Zone Commands

Command	Value	Holding Register
Disable	0x0200	Use Zone Holding Register Address
Enable	0x0400	
Activate*	0x0800	
Deactivate*	0x1000	

***** Activate and Deactivate work only for output-controlled modules like control and relay.
Different panels support different zone types. Refer to Table 7.8, "Zone Command Availability by Panel" for information about zone types supported.

Table 7.8: Zone Command Availability by Panel

	General Zones		Logic Zones		Trouble/Release Zones	
Panel Type	**Enable/ Disable**	**Activate/ Deactivate**	**Enable/ Disable**	**Activate/ Deactivate**	**Enable/ Disable**	**Activate/ Deactivate**
AFP-2800	Yes	No	No	No	No	No
AFP-3030	Yes	No	No	No	No	No
N16	Yes	Yes	Yes	No	No	No
NFS-320	Yes	No	No	No	No	No
NFS-640	Yes	No	No	No	No	No
NFS2-640	Yes	No	No	No	No	No
NFS-3030	Yes	No	No	No	No	No
NFS2-3030	Yes	Yes	Yes	No	No	No
XLS 120	Yes	No	No	No	No	No
XLS 140-2	Yes	No	No	No	No	No
XLS 2000	Yes	No	No	No	No	No
XLS 3000	Yes	Yes	Yes	No	No	No

Generic Commands List

Table 7.9: Device Commands

Commands	Value	Gamewell-FCI	AM-MA Series	Notifier EN	Holding Register
Enable[a]	0x0400	No	Yes	Yes	Use Device/Module Holding Register Address
Disable[a]	0x0500	No	Yes	Yes	
Acknowledge Trouble	0x0b00	Yes	No	No	
Acknowledge Alarm	0x0c00	Yes	No	No	
Acknowledge CO and Gas Alarm	0x0d00	Yes	No	No	

a Enable and disable for channels are available in AM-MA Series panels only. Enable and disable for devices are available for all AM-MA Series and NOTIFIER EN brands, but not available for Gamewell-FCI panels.

Table 7.10: Zone Commands

Commands	Value	Gamewell-FCI	AM-MA Series	Notifier EN	Holding Register
Enable	0x0600	No	Yes	Yes	Use Zone Holding Register Address
Disable	0x0700	No	Yes	Yes	
Zone mode	0x1500	No	No	Yes	

Table 7.11: Panel Commands

Commands	Value	Gamewell-FCI	AM-MA Series	Notifier EN	Holding Register
Disable sounder	0x0013	No	No	Yes	20001
Enable sounder	0x0014	No	No	Yes	20001
Reset	0x0000	Yes	Yes	Yes	20001
Silence	0x0001	Yes	Yes	Yes	20001
Unsilence	0x000A	Yes	No	No	20001
Deactivate Buzzer	0x000E	No	Yes	Yes	20001
Terminate test[a]	0x0012	No	No	Yes	20001

a Only for Zone tests.

7.19 NOTIFIER UL: Analog Values and Trending

Trending of analog values is supported on all of the panels/networks 4 – 20 mA modules. The only limitation is that the gateway will only actively read analog values for up to 10 analog modules at a time. All the analog values on all the modules can be read as long as a separate poll is sent for these points in groups of up to 10 points at a time, following the rules outlined below. Refer to "Analog Value Use Cases" for clarity on this issue.

- Accept a poll for up to any 10 analog (4–20 mA) points per gateway.
- Requests for more points than this are rejected with an exception code.
- If any of the points in the request are not 4–20 mA modules then the gateway rejects the request with an exception code.
- The first poll for analog values is an initialization poll. This initialization poll informs the gateway to start acquiring analog values for these points at 5 second intervals.

- Points are only polled on the NFN if the 4–20 mA module is in at least the first level of alarm status. If the point is normal then the gateway returns a value of zero.

NOTE: The first response to an analog point poll is zero. This response is an initialization confirmation from the gateway.

- Upon receiving the initialization confirmation, the client can begin polling the analog points. The client should wait 5 seconds after the initialization request to insure that the CLSS Gateway has had enough time to get the analog values and load the registers. Thereafter the CLSS Gateway continues to poll the points. The analog value in the CLSS Gateway are updated no faster than once every 5 seconds.
    - Points are polled if the device is in at least the first level of alarm status. Zero is returned for devices not in alarm status.
    - When a point being polled enters normal status, polling for that point on the NFN is terminated and the analog value register for that point is filled with zeros.
- The CLSS Gateway ceases polling the analog points when:
    - The client does not make a request for these exact same points over a period defined in the Modbus Configuration Tool as “Analog Value Time Out”. The default is 15 seconds.
    - The gateway makes a request for a point (or points) that is not *exactly the same as the initial request*. The CLSS Gateway first sends an initial confirmation for the new set of analog points, and then begins polling those points at 5 second intervals.
- When a 4–20 mA module is in fault, the analog value register for that point is filled with zeros.

Analog Value Use Cases

Use Case 1: A client requests analog values from the points L1M1 through L1M10 every 10 seconds.

Result: The CLSS Gateway sends back zeros in response to the first request for analog values from the points L1M1 through L1M10. The CLSS Gateway sends back actual values on the second request from the client 5 seconds later. The CLSS Gateway continues to poll these devices as long as the client continues to send analog value requests for points L1M1 through L1M10 at a rate faster than the Analog Value Time Out.

Use Case 2: A client requests analog values from the points L1M1 through L1M10. After 10 minutes of polling on a 10 second interval, the client stops requesting analog values for these points.

Result: The CLSS Gateway sends back zeros in response to the first request for analog values from the points L1M1 through L1M10. The CLSS Gateway sends back actual values on the second request from the client 10 seconds later. The CLSS Gateway continues to poll these devices as long as the client continues to send analog value requests for points L1M1 through L1M10. When the client stops polling at 10 minutes, the CLSS Gateway will stop polling the NFN after the Analog Value Time Out expires.

Use Case 3: A client requests analog values from the points L1M1 through L1M10. After 10 minutes of polling on a 10 second interval, the client requests analog values from the points L1M20 to L1M22.

Result: The CLSS Gateway sends back zeros in response to the first request for analog values from the points L1M1 through L1M10. The CLSS Gateway sends back actual values on the second request from the client 10 seconds later. The Gateway continues to poll these devices as long as the client continues to send analog value requests for the points L1M1 through L1M10. When the client sends a request for analog values from the points L1M20 through L1M22, gateway waits till the timeout happens and then the CLSS Gateway immediately sends back zeros in response to the first analog value request from these points and starts polling L1M20 through L1M22. The CLSS Gateway only polls the points specifically requested.

Use Case 4: A client requests analog values from the points L1M1 through L1M10. After 10 minutes of polling on a 10 second interval, the client requests analog values from the points L1M5 through L1M12.

Result: The CLSS Gateway sends back zeros in response to the first request for analog values from the points L1M1 through L1M10. The CLSS Gateway sends back actual values in response to the second request from the client 10 seconds later. The CLSS Gateway continues to poll these devices as long as the client continues to send analog value requests for the points L1M1 through L1M10. When the client sends a request for analog values from the points L1M5 through L1M12, the gateway immediately sends back zeros in response to the first analog value request from points L1M11 and L1M12 (since these are newly requested points) and it sends back actual values in response to the continuing analog value requests for points L1M5 through L1M10 (since it already has been polling these points). The gateway stops polling points L1M1 through L1M4 and starts polling points L1M5 through L1M12.

Use Case 5: A client requests analog values from the points L1M1 through L1M15.

Result: The CLSS Gateway sends back an exception response because it can only process requests for up to 10 analog values at a time. The client should request and receive values for L1M1 through L1M10 and then send a request for L1M11 through L1M15. Note that the first request for analog values from a valid range of points is considered an initialization request, which returns zeros.

7.20 Register Mapping

7.20.1 Register Mapping Overview

The CLSS Gateway uses 16-bit registers. One Modbus Input register and one Modbus Holding Register are allocated for each device address. These registers represent a contiguous address mapping of all devices and points.

CAUTION: ACK BLOCK AND ACK ALARM ARE NOT APPLICABLE FOR NOTIFIER EN (ID3000 AND PEARL) PANELS AND AM-MA SERIES PANELS.

Point Status Holding Registers

CAUTION: A LIMITATION - FOR NOTIFIER EN (ID3000 AND PEARL) PANELS, PARENT MODULES AND THEIR CHANNELS WILL NOT GET INITIATED WITH THE REGISTER VALUE 0X1400. HOWEVER, THEY WILL CONTINUE TO RECEIVE THE EVENTS.

Each of the point status holding registers is divided into an upper and lower byte as described below. See Table 7.12, “Point Status Holding Register: Bit Definitions” for detailed information about point status holding registers.

- **Upper Byte**: The upper byte contains general status information about the point.
- **Lower Byte:** The lower byte is primarily used when bit 11 in the upper byte is a ‘1’ (or active). When bit 11 is a ‘1’, See “CLSS Gateway Active Event Code” on page 90. for detailed information about the active point. The lower byte will be all 0’s if the device is not in an active state.

Specifically, the lower byte contains the actual active event for this point. An active state is defined in this gateway as any Fire, Security, Critical Process, Medical, Mass Notification, or Supervisory alarm state.

If the point is not present in the panel programming, all bits in the lower byte will contain a ‘1’ or the value FFH, but the upper byte will contain a ‘0’.

The only possible active event type for zones is Non-Fire Activation (71H). See “CLSS Gateway Active Event Code” on page 90.

Table 7.12: Point Status Holding Register: Bit Definitions

	Upper Byte								Lower Byte							
Bit No.	**15**	**14**	**13**	**12**	**11**	**10**	**9**	**8**	**7**	**6**	**5**	**4**	**3**	**2**	**1**	**0**
Bit Name	Ack Block	Prealarm	Trouble	InActive	Active	Enable	Disable	Ack Fire Alarm	**Active Event Code** (When Bit 11 is set to 1, see 7.27 "CLSS Gateway Active Event Code".)							
	When individual upper byte bits are set to 1, the following definitions apply: **Ack Block** (Bit 15):All events on this point, other than fire alarm, are acknowledged. Not applicable for zones. **Prealarm** (Bit 14): The point is in a prealarm state. Not applicable for zones. **Trouble** (Bit 13): The point is in a trouble state. Not applicable forzones. **InActive** (Bit 12): The point is not active. **Active** (Bit 11): The point is active and there will be an active event type in the lower byte. **Enable** (Bit 10): The point is enabled. **Disable** (Bit 9): The point isdisabled. **Ack Fire Alarm** (Bit 8): The fire alarm on this point is acknowledged. Not applicable for zones.															

Refer to Table 7.13, "Point Status Holding Register Point Addresses" for details of the holding register addresses and the channels. Each holding register range is for either detectors or modules.

Table 7.13: Point Status Holding Register Point Addresses

Start Address	End Address	Address
400001	400300	L1D1–L1D300
400301	400600	L1M1–L1M300
400601	400900	L2D1–L2D300
400901	401200	L2M1–L2M300
401201	401500	L3D1–L3D300
401501	401800	L3M1–L3M300
401801	402100	L4D1–L4D300
402101	402400	L4M1–L4M300
402401	402700	L5D1–L5D300
402701	403000	L5M1–L5M300
403001	403300	L6D1–L6D300
403301	403600	L6M1–L6M300
403601	403900	L7D1–L7D300
403901	404200	L7M1–L7M300
404201	404500	L8D1–L8D300
404501	404800	L8M1–L8M300

Start Address	End Address	Address
404801	405100	L9D1–L9D300
405101	405400	L9M1–L9M300
405401	405700	L10D1–L10D300
405701	406000	L10M1–L10M300

NOTE: On the AFP-2800, output activation status is not reported to the CLSS Gateway and therefore the bits and event type will always indicate a non-active state.

■ Point Device Type Input Registers

CAUTION: A LIMITATION - FOR NOTIFIER EN (ID3000 AND PEARL) PANELS, PARENT MODULES AND THEIR CHANNELS ARE NOT SHOWN IN THE CSV FILE AND IN THE DEVICE TYPE REGISTERS.

NOTE: If the point is not present in the panel programming, all bits in the byte will contain a value of *1* or *FFFFH*.

There are 6000 point device type holding registers. Each register address consists of two bytes representing a detector or module.

NOTE: For Gamewell-FCI panels, the user-defined data types and the CSV file would not have Device Types.

Table 7.14: Point Device Type Input Register: Bit Definitions

	Upper Byte								Lower Byte							
Bit No.	**15**	**14**	**13**	**12**	**11**	**10**	**9**	**8**	**7**	**6**	**5**	**4**	**3**	**2**	**1**	**0**
Device Types (see 7.28 "Device Types")																

Table 7.15: Input Register Addresses of the Point Device Types

Start Address	End Address	Address
300001	300300	L1D1–L1D300
300301	300600	L1M1–L1M300
300601	300900	L2D1–L2D300
300901	301200	L2M1–L2M300
301201	301500	L3D1–L3D300
301501	301800	L3M1–L3M300
301801	302100	L4D1–L4D300
302101	302400	L4M1–L4M300
302401	302700	L5D1–L5D300
302701	303000	L5M1–L5M300
303001	303300	L6D1–L6D300
303301	303600	L6M1–L6M300
303601	303900	L7D1–L7D300
303901	304200	L7M1–L7M300
304201	304500	L8D1–L8D300

Start Address	End Address	Address
304501	304800	L8M1–L8M300
304801	305100	L9D1–L9D300
305101	305400	L9M1–L9M300
305401	305700	L10D1–L10D300
305701	306000	L10M1–L10M300

Zones/Panel Circuits Status Holding Registers

CAUTION: GAMEWELL-FCI PANELS DO NOT SUPPORT ZONES. NOTIFIER EN (ID3000 AND PEARL) PANELS AND THE AM-MA SERIES PANELS SUPPORT ONLY THE GENERAL ZONES.

Each of the zones/panel circuits status holding registers is divided into an upper and lower byte as described below.

- **Upper Byte**: The upper byte contains general status information about the zone or panel circuit.
- **Lower Byte:** The lower byte is primarily used when bit 11 in the upper byte is a '1' (or active). When bit 11 is a '1', See "CLSS Gateway Active Event Code" on page 90.

for detailed information about the active zone or panel circuit. The lower byte will be all 0's if the zone/panel circuit is not in an active state.

Specifically, the lower byte contains the actual active event for this zone or panel circuit. An active state is defined in this gateway as any Fire, Security, Critical Process, Medical, Mass Notification, or Supervisory alarm state.

If the zone or panel circuit is not present in the panel programming, all bits in the lower byte will contain a '1' or the value 'FFH', but the upper byte will contain a '0'.

Table 7.16: Zones/Panel Circuits Holding Registers: Bit Definitions

	Upper Byte								Lower Byte							
Bit No.	**15**	**14**	**13**	**12**	**11**	**10**	**9**	**8**	**7**	**6**	**5**	**4**	**3**	**2**	**1**	**0**
Bit Name	Ack Block	Prealarm	Trouble	InActive	Active	Enable	Disable	Ack Fire Alarm	Active Event Type (When Bit 11 is set to 1, see 7.27 "CLSS Gateway Active Event Code".)							
	When individual upper byte bits are set to 1, the following definitions apply: **Ack Block** (Bit 15): All events on this zone/panel circuit, other than fire alarm, are acknowledged. **Prealarm** (Bit 14): The zone/panel circuit is in a prealarm state. **Trouble** (Bit 13): The zone/panel circuit is in a trouble state. **InActive** (Bit 12): The zone/panel circuit is not active. **Active** (Bit 11): The zone/panel circuit is active and there will be an active event type in the lower byte. **Enable** (Bit 10): The zone/panel circuit is enabled. **Disable** (Bit 9): The zone/panel circuit is disabled. **Ack Fire Alarm** (Bit 8): The fire alarm on this zone/panel circuit is acknowledged.															

The holding register addresses and the zones contained in these addresses are detailed in this table.

Table 7.17: Register and Zone Addresses for Zone Types

Zone Type	Register Address	Zone Address
General Zones	408001–410000	Z 1,2,3,4,5,6,7,8,...2000
Logic Zones	410001–412000	Z 1,2,3,4,5,6,7,8,...2000
Trouble Zones	412001–412100	Z 1,2,3,4,5,6,7,8,...100
Releasing Zones	412101–412200	Z 1,2,3,4,5,6,7,8,...100

The holding register addresses and the panel circuits contained in these addresses are detailed in Table 7.18, "Register Addresses for Panel Circuits".

Table 7.18: Register Addresses for Panel Circuits

Register Address	Panel Circuits
414001–414008	P1.1–P1.8
414009–414016	P2.1–P2.8
414017–414024	P3.1–P3.8
414025–414032	P4.1–P4.8
414033–414040	P5.1–P5.8
414041–414048	P6.1–P6.8
414049–414056	P7.1–P7.8
414057–414064	P8.1–P8.8
414065–414072	P9.1–P9.8
414073–414080	P10.1–P10.8
414081–414088	P11.1–P11.8
414089–414096	P12.1– P12.8

The maximum panel circuit points by fire panel is described in Table 7.19, "Supported Circuits by Panel".

Table 7.19: Supported Circuits by Panel

Panel	Max. Panel Circuits Points
NFS-320	Not Supported
NFS-640	8
NFS2-640	Not Supported
NFS-3030	12
NFS2-3030	Not Supported

Channel Status Holding Registers

Each channel status holding register is arranged into an *Upper Byte* and *Lower Byte* as described in the Table 7.20, "Channel Status Holding Register: Bit Definitions":

- **Upper Byte**: Has general status information about the point.
- **Lower Byte**: Primarily used when bit 11 in the upper byte is a '1', which means the channel is active. Any Fire, Security, Critical Process, Medical, Mass Notification, or Supervisory alarm state identifies the active state in this gateway.

Refer to CLSS Gateway Active Event Code for detailed information about the active point.

All of the lower byte will be zeroes if the device is not in an active state.

If the channel is not present in the panel programming, all bits in the Lower Byte will have a '1' or the value FFH, but the Upper Byte will have a '0'.

Specifically, the lower byte contains the actual active event for this channel. An active state is defined in this gateway as any Fire, Security, Critical Process, Medical, Mass Notification, or Supervisory alarm state.

If the channel is not present in the panel programming, all bits in the lower byte will contain a '1' or the value FFH, but the upper byte will contain a '0'.

Table 7.20: Channel Status Holding Register: Bit Definitions

	Upper Byte								Lower Byte							
Bit No.	**15**	**14**	**13**	**12**	**11**	**10**	**9**	**8**	**7**	**6**	**5**	**4**	**3**	**2**	**1**	**0**
Bit Name	Ack Block	Prealarm	Trouble	InActive	Active	Enable	Disable	Ack Fire Alarm	**Active Event Code** (When Bit 11 is set to 1, see 7.27 "CLSS Gateway Active Event Code".)							
	When individual upper byte bits are set to 1, the following definitions apply: **Ack Block** (Bit 15):All events on this channel, other than fire alarm, are acknowledged. Not applicable for zones. **Prealarm** (Bit 14): The channel is in a prealarm state. Not applicable for zones. **Trouble** (Bit 13): The channel is in a trouble state. Not applicable for zones. **InActive** (Bit 12): The channel is not active. **Active** (Bit 11): The channel is active and there will be an active event type in the lower byte. **Enable** (Bit 10): The channel is enabled. **Disable** (Bit 9): The channel is disabled. **Ack Fire Alarm** (Bit 8): The fire alarm on this channel is acknowledged.															

Refer to the Mapping for Channels section for details of the holding register addresses and the channels. Each holding register address range is for channels.

Mapping for Channels

The holding register addresses for the channels are described below.

■ Normal Mapping

Table 7.21: Holding Register Addresses for Normal Mapping

Start Address	End Address	Address
421001	424600	L1M1 - L1M300
424601	428200	L2M1 - L2M300
428201	431800	L3M1 - L3M300
431801	435400	L4M1 - L4M300
435401	439000	L5M1 - L5M300
439001	442600	L6M1 - L6M300
442601	446200	L7M1 - L7M300
446201	449800	L8M1 - L8M300
449801	453400	L9M1 - L9M300
453401	457000	L10M1 - L10M300

■ Special Mapping

Table 7.22: Holding Register Addresses for Special Mapping

Start Address	End Address	Address
421001	421775	L1M1 - L1M300
421776	422550	L2M1 - L2M300
422551	423325	L3M1 - L3M300
423326	424100	L4M1 - L4M300
424101	424875	L5M1 - L5M300
424876	425650	L6M1 - L6M300
425651	426425	L7M1 - L7M300
426426	427200	L8M1 - L8M300
427201	427975	L9M1 - L9M300
427976	428750	L10M1 - L10M300

■ Channel Device Type Input Registers

NOTE: If the channel is not present in the panel programming, all bits in the byte will contain a value of *1* or *FFFFH*.

There are 57000 channel device type input registers for normal mapping. 7750 device type input registers for special mapping. Each register address consists of two bytes representing a detector or module.

Table 7.23: Channel Device Type Input Registers

	Upper Byte								Lower Byte							
Bit No.	**15**	**14**	**13**	**12**	**11**	**10**	**9**	**8**	**7**	**6**	**5**	**4**	**3**	**2**	**1**	**0**
Device Types (see 7.28 "Device Types")																

Mapping for Channels

The input register addresses for the channels are described below.

■ Normal Mapping

Table 7.24: Input Register Addresses for Normal Mapping

Start Address	End Address	Address
321001	324600	L1M1 - L1M300
324601	328200	L2M1 - L2M300
328201	331800	L3M1 - L3M300
331801	335400	L4M1 - L4M300
335401	339000	L5M1 - L5M300
339001	342600	L6M1 - L6M300
342601	346200	L7M1 - L7M300
346201	349800	L8M1 - L8M300
349801	353400	L9M1 - L9M300
353401	357000	L10M1 - L10M300

■ Special Mapping

Table 7.25: Input Register Addresses for Special Mapping

Start Address	End Address	Address
321001	321775	L1M1 - L1M300
321776	322550	L2M1 - L2M300
322551	323325	L3M1 - L3M300
323326	324100	L4M1 - L4M300
324101	324875	L5M1 - L5M300
324876	325650	L6M1 - L6M300
325651	326425	L7M1 - L7M300
326426	327200	L8M1 - L8M300
327201	327975	L9M1 - L9M300
327976	328750	L10M1 - L10M300

7.20.2 Gamewell-FCI: CAM Text Event Holding Registers

Each of the point status holding registers is divided into an upper and lower byte as described in Table 7.26, “CAM Text Event Holding Register Bit Definitions”.

- **Upper Byte**: The upper byte contains general status information about the point.
- **Lower Byte:** The lower byte is primarily used when bit 11 in the upper byte is a ‘1’ (or active). When bit 11 is a ‘1’, See “CLSS Gateway Active Event Code” on page 90. for detailed information about the active point. The lower byte will be all 0’s if the point is not in an active state.

Specifically, the lower byte contains the actual active event for this point. An active state is defined in this gateway as any Fire, Security, Critical Process, Medical, Mass Notification, or Supervisory alarm state.

If the point is not present in the panel programming, all bits in the lower byte will contain a ‘1’ or the value ‘FFH’, but the upper byte will contain a ‘0’.

The holding register address and the CAM Text Event contained in the address are detailed in the following table.

Table 7.26: CAM Text Event Holding Register Bit Definitions

	Upper Byte								Lower Byte							
Bit No.	**15**	**14**	**13**	**12**	**11**	**10**	**9**	**8**	**7**	**6**	**5**	**4**	**3**	**2**	**1**	**0**
Bit Name	Ack Block	Prealarm	Trouble	InActive	Active	Enable	Disable	Ack Fire Alarm	**Active Event Code** (When Bit 11 is set to 1, see 7.27 "CLSS Gateway Active Event Code".)							
	When individual upper byte bits are set to 1, the following definitions apply: **Ack Block** (Bit 15):All events on this point, other than fire alarm, are acknowledged. Not applicable for zones. **Prealarm** (Bit 14): The point is in a prealarm state. Not applicable for zones. **Trouble** (Bit 13): The point is in a trouble state. Not applicable forzones. **InActive** (Bit 12): The point is not active. **Active** (Bit 11): The point is active and there will be an active event type in the lower byte. **Enable** (Bit 10): The point is enabled. **Disable** (Bit 9): The point isdisabled. **Ack Fire Alarm** (Bit 8): The fire alarm on this point is acknowledged. Not applicable for zones.															

Table 7.27: CAM Test Events Register Address

Start Address	End Address	CAM Text
415001	416000	CAM1 – CAM 1000

Bell Circuits Status Holding Registers

■ NFS2-640 and NFS-320 Only

Each of the bell circuits status holding registers is divided into an upper and lower byte as described in Table 7.28, "Bell Circuits Holding Register Bit Definitions".

- **Upper Byte**: The upper byte contains general status information about the bell circuit.
- **Lower Byte:** The lower byte is primarily used when bit 11 in the upper byte is a '1' (or active). When bit 11 is a '1', See "CLSS Gateway Active Event Code" on page 90. for detailed information about the active bell circuit. The lower byte will be all 0's if the bell circuit is not in an active state.

Specifically, the lower byte contains the actual active event for this bell circuit. An active state is defined in this gateway as any Fire, Security, Critical Process, Medical, Mass Notification, or Supervisory alarm state.

If the bell circuit is not present in the panel programming, all bits in the lower byte will contain a '1' or the value 'FFH', but the upper byte will contain a '0'.

Table 7.28: Bell Circuits Holding Register Bit Definitions

	Upper Byte								Lower Byte							
Bit No.	**15**	**14**	**13**	**12**	**11**	**10**	**9**	**8**	**7**	**6**	**5**	**4**	**3**	**2**	**1**	**0**
Bit Name	Ack Block	Prealarm	Trouble	InActive	Active	Enable	Disable	Ack Fire Alarm	Active Event Type (When Bit 11 is set to 1, see 7.27 "CLSS Gateway Active Event Code".)							
	When individual upper byte bits are set to 1, the following definitions apply: **Ack Block** (Bit 15): All events on this bell circuit, other than fire alarm, are acknowledged. **Prealarm** (Bit 14): The bell circuit is in a prealarm state. **Trouble** (Bit 13): The bell circuit is in a trouble state. **InActive** (Bit 12): The bell circuit is not active. **Active** (Bit 11): The bell circuit is active and there will be an active event type in the lower byte. **Enable** (Bit 10): The bell circuit is enabled. **Disable** (Bit 9): The bell circuit is disabled. **Ack Fire Alarm** (Bit 8): The fire alarm on this bell circuit is acknowledged.															

The holding register address and the bell circuit contained in the address is detailed in Table 7.29, "Bell Circuit Holding Register Addresses".

Table 7.29: Bell Circuit Holding Register Addresses

Start Address	End Address	Device Address
406001	406001	Bell Circuit 1
406002	406002	Bell Circuit 2
406003	406003	Bell Circuit 3
406004	406004	Bell Circuit 4

■ Bell Circuits Device Type Input Registers

NOTE: If the point is not present in the panel programming, all bits in the byte will contain a value of *1* or *FFFFH*.

Each bell circuits device type holding register address consists of two bytes as defined in Table 7.30, "Bell Circuits Device Type Input Register Bit Definitions" representing a bell circuit as shown in Table 7.31, "Bell Circuit Device Type -Input Register Addresses".

Table 7.30: Bell Circuits Device Type Input Register Bit Definitions

	Upper Byte								Lower Byte							
Bit No.	15	14	13	12	11	10	9	8	7	6	5	4	3	2	1	0
Device Types (see 7.28 "Device Types")																

Table 7.31: Bell Circuit Device Type -Input Register Addresses

Start Address	End Address	Device Address
306001	306001	BellCircuit1
306002	306002	BellCircuit2
306003	306003	BellCircuit3
306004	306004	BellCircuit4

Panel Status Holding Register

The panel status holding register is divided into an upper and lower byte as described below and in Table 7.32, "Panel Status Holding Register Bit Definitions" representing one register address as shown in Table 7.33, "Panel Status Holding Register Addresses".

- **Silence**: The fire alarm control panel is silenced when this bit is set to 1.
- **Reset**: Not used.

Table 7.32: Panel Status Holding Register Bit Definitions

	Upper Byte								Lower Byte							
Bit No.	15	14	13	12	11	10	9	8	7	6	5	4	3	2	1	0
Bit Name	Not Used														Silence	Reset

Table 7.33: Panel Status Holding Register Addresses

Start Address	End Address	Description
420001	420001	Panel Status Holding Register

Analog Values Input Registers

Analog values listed in Table 7.34, "Input Register Analog Values" are only available for 4–20 mA modules. Refer to Table 7.34, "Input Register Analog Values" for details regarding analog values.

Table 7.34: Input Register Analog Values

Start Address	End Address	Analog Value (16 bits)
310001	310300	L1M1–L1M300
310301	310600	L2M1–L2M300
310601	310900	L3M1–L3M300
310901	311200	L4M1–L4M300
311201	311500	L5M1–L5M300
311501	311800	L6M1–L6M300
311801	312100	L7M1–L7M300
312101	312400	L8M1–L8M300
312401	312700	L9M1–L9M300
312701	313000	L10M1–L10M300

Panel and System Troubles Holding Registers

One hundred 16-bit registers are Reserved for panel troubles and one register is assigned as an overall panel trouble indicator as shown in Table 7.35, "Panel and System Troubles Holding Register Addresses".

Table 7.35: Panel and System Troubles Holding Register Addresses

Start Address	End Address	Description
460000	460000	Panel Trouble Summary (Total number of Trouble bits set for the node)
460001	460100	Panel Troubles

A single bit is Reserved for each trouble in the system. The assignment of bits to trouble codes is shown in 7.29 "System Troubles Register Map".

7.20.3 General Counters

The General Counters are Registers used for having a count of different events in a Loop based on detectors or modules.

Table 7.36: The General Counters

	Loop 1		Loop 2	
Counters	**Loop Detectors**	**Loop Modules**	**Loop Detectors**	**Loop Modules**
Loop alarms Lx	414101	414106	414112	414117
Loop Troubles Lx	414102	414107	414113	414118
Loop Prealarms Lx	414103	414108	414114	414119
Loop Disables Lx	414104	414109	414115	414120
Loop tests Lx	414105	414110	414116	414121
Active NONAS Lx		414111		414122
	Loop 3		**Loop 4**	
Loop alarms Lx	414123	414128	414134	414139
Loop Troubles Lx	414124	414129	414135	414140
Loop Prealarms Lx	414125	414130	414136	414141
Loop Disables Lx	414126	414131	414137	414142
Loop tests Lx	414127	414132	414138	414143
Active NONAS Lx		414133		414144
	Loop 5		**Loop 6**	
Loop alarms Lx	414145	414150	414156	414161
Loop Troubles Lx	414146	414151	414157	414162
Loop Prealarms Lx	414147	414152	414158	414163
Loop Disables Lx	414148	414153	414159	414164
Loop tests Lx	414149	414154	414160	414165
Active NONAS Lx		414155		414166
	Loop 7		**Loop 8**	
Loop alarms Lx	414167	414172	414178	414183
Loop Troubles Lx	414168	414173	414179	414184
Loop Prealarms Lx	414169	414174	414180	414185
Loop Disables Lx	414170	414175	414181	414186
Loop tests Lx	414171	414176	414182	414187
Active NONAS Lx		414177		414188
	Loop 9		**Loop 10**	
Loop alarms Lx	414189	414194	414200	414205
Loop Troubles Lx	414190	414195	414201	414206
Loop Prealarms Lx	414191	414196	414202	414207
Loop Disables Lx	414192	414197	414203	414208
Loop tests Lx	414193	414198	414204	414209
Active NONAS Lx		414199		414210

7.20.4 Gateway Information Input Registers

NOTE: Information/debug values are used by the CLSS Gateway Unit ID only. All other nodes reject reads in this address range.

The CLSS Gateway records some status and configuration information for debugging and technical support purposes. This information is stored in some Reserved gateway registers as outlined below.

- Gateway Modbus Address
- Gateway IP Address
- Gateway Version Number

Table 7.37: Gateway Information Input Registers

Start Address	End Address	Description
360001	360100	Information/Debug information
320001	320015	Node Status: 1 = On Line 0 = Off Line The CLSS Gateway tracks status of network nodes under Modbus feature monitoring.
360016	360016	Gateway major version number
360017	360017	Gateway minor version number
360018	360018	Gateway feature number
360019	360019	Gateway build number

7.20.5 Node Status Details

Each nodes status is represented by a bit in a register. If the bit is set, the node is on line. Below table provides an example of how this is represented in a register.

Table 7.38: Node Status Details

	Bit Number															
Address	15	14	13	12	11	10	9	8	7	6	5	4	3	2	1	0
320001	N15	N14	N13	N12	N11	N10	N9	N8	N7	N6	N5	N4	N3	N2	N1	N0
320002	N31	N30	N29	N28	N27	N26	N25	N24	N23	N22	N21	N20	N19	N18	N17	N16

For Gamewell Panel Status

Table 7.39: System Trouble

Register	Bit No.	System Trouble Name
460051	4	Node Missing

For Pearl Panel Status

Table 7.40: System Trouble

Register	Bit No.	System Trouble Name
4600060	15	NETWORK DOMAIN RING OR SUBNET LOST

7.21 Read Device Identification (0x2B/0x0E)

This function code allows reading the identification and additional information about the CLSS Gateway.

Table 7.41: Objects and Their Details

Object ID	Object Name / Description	Value
0x00	VendorName	Honeywell
0x01	ProductCode	HON-CGW-MBB
0x02	MajorMinorRevision	V1.0 (*Example*)
0x03	VendorUrl	www.fire.honeywell.com
0x04	ProductName	CLSS
0x05	ModelName	CLSS Gateway
0x06	UserApplicationName	Modbus Service
0x07	MappingVersion	V1.0 (Example)

7.22 Troubleshooting

7.22.1 What are some basic guidelines when installing a CLSS Gateway?

- Polling should be done slowly to start.
- Use Modscan® to debug the system rather than a more complicated client. Verify that registers are being updated as events happen on the NFN network/panel.
- Make sure gateway can be pinged from the same computer on which the client application is being installed.
- Check and double check the power supplies as well as all cabling.
- Make sure the client supports Unit IDs.
- Stop the client from sending a subsequent request until after it receives a response from the gateway.
- Make sure the client accepts all exception responses. Including 0xA and 0xB.
- Use Wireshark® to debug IP traffic.
- Be sure only one client is polling the gateway.
- Check the CLSS Gateway configuration tool and be sure that the Authorized Client IP address is set to **0.0.0.0**. If using the Authorized Client IP security feature, confirm that the address in the gateway matches the address in the Modbus client.

7.22.2 How fast can the Modbus client poll the gateway?

The polling rate is a function of several variables. Some issues that will determine the maximum poll rate are:

- The size of the NFN network that is being monitored.
- The number of points on the panels.
- The event activity on the NFN network/panel (i.e. VeriFire downloads).
- Requests for analog values are much slower than other requests
- If only a partial response form the gateway is seen in the Modbus client, try increasing the “response time out” value in the client to a larger value. If the value is set to 5 seconds or more, this should be adequate. The exact response time out will depend on IP network delays and routing. On a small IP network, the gateway responds to a read of 100 register in less than 1 second.

The gateway also has some processing overhead in order to do such things as maintain the registers.

7.22.3 How can I tell if the gateway is running?

- Ping the gateway from the computer on which the Modbus client is running.
- Use Wireshark to analyze the data on the IP network.
- Modscan was one tool that was used during development to test the gateway. It is designed primarily as a testing device for verification of correct protocol operation in new or existing systems.

7.22.4 How do I recover a lost password from the gateway?

If the password for the gateway is lost, programming changes cannot be made. In this situation, the gateway settings must be reset.

7.22.5 What is an "initialization read" for analog values?

This is the first read of up to 10 analog values from a 4–20 mA module. This first read tells the gateway that it should begin a polling routine for the analog values in this request. The first response from the initialization will usually be all zeros. Subsequent responses will have the actual values.

7.22.6 How many analog values can I read at a time?

Ten analog values can be read at one time. An initialization read must be performed.

7.22.7 Why do I get an exception code when trying to read an analog value?

There are several reasons why an exception code is received when requesting an analog value:

- The point from which an analog value is being requested is not a 4–20 mA analog input module.
- At least one of the points in the group of points from which an analog value is being requested is not a 4–20 mA analog input module.
- More than 10 analog values have been requested in a single request.

7.22.8 Why do I get all zeros when I read an analog value?

There are several reasons a zero reading from an FMM-4-20 Analog Input Module is received:

- The first read for an analog value from the gateway initializes the polling routine in the gateway to retrieve analog values from the NFN network. The first response will usually be all zeros. This is normal. The subsequent polls of an analog value for the same point or group of points will return actual values. As long as the same points continue to be polled at a rate faster than the Analog Poll Time Out, then the gateway will continue to poll the same points.
- The gateway does not actually take an analog value reading unless the module has reached the first threshold and therefore it will return a zero reading.
- If the client polls the gateway too quickly after the initialization poll then the gateway may still return zeros.
- If the client polls the analog values slower than the Analog Poll Time Out, then the gateway may return all zeros.

7.23 What is the "Analog Value Polling Time Out"?

This is how long a gateway will continue to poll analog points after the last client read request of the points. As long as the client makes analog reads of the same points faster than the Analog Value Polling Time then the gateway will continue to poll these points. If the client polls slower than the Analog Value Polling Time then the gateway may return readings of zero because this will be considered an initialization read.

7.24 Conversion to Modbus RTU

CLSS Gateway (acting as a Modbus slave) interfaces with a Modbus master through Modbus TCP protocol. For a Modbus RTU master to interface with the CLSS Gateway, use Moxa MGate MB3180 and convert the Modbus TCP protocol to the Modbus RTU (Serial) protocol.

7.24.1 Hardware Configuration

Refer to the *Moxa MGate MB3180 Quick Installation Guide* for hardware configuration of the MB3180.

7.24.2 Software Configuration

Configure the CLSS Gateway as a node in the NFN network with a node number.

CAUTION: ENSURE THAT THE NFN NETWORK CONFIGURATIONS ARE UNCHANGED.

Refer to the *NOTI•FIRE•NET™ Network Systems Interface Manual (P/N 51584)* or the *High Speed NOTI•FIRE•NET™ Instruction Manual (P/N 54013)* for details about network configuration.

When configuring the network, refer to the settings specified in Table 7.42: "MGate MB3180 Configuration Settings". Settings not specified should be tailored to your network requirements. Refer to the *MGate MB3000 Modbus Gateway User's Manual* for details.

1. Connect the MB3180 to a configuration computer through an Ethernet cable as shown in Figure 7.7.

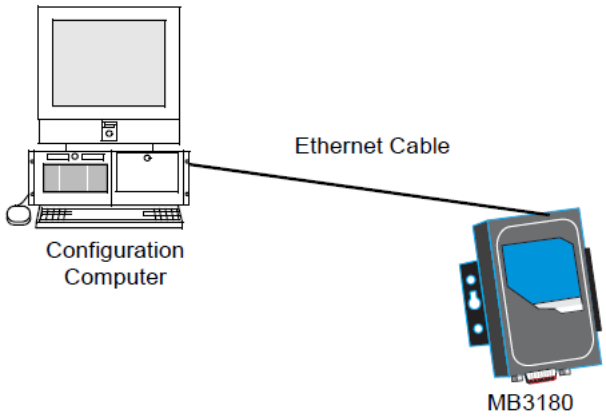

Figure 7.7: Connect a Configuration Computer

2. Run the *MGate Manager* installation software (`MGM_SETUP_VERX.X_BUILD_XXXXXXXX.EXE`) found on the Software CD shipped with the MGate MB3180.
3. Wait for the installation to complete.
4. Run *MGate Manager*.
5. Power up the MB3180.
6. Ensure that the **Ready** and **Ethernet** lights are ON.
7. Configure the MB3180 for the network.
8. Wait for the configuration to complete.
9. Click **OK**.
10. Click **Exit**.

Table 7.42: MGate MB3180 Configuration Settings

Tab	Setting
Mode	RTU Master Mode
Slave ID Map	The MGate MB3180 accepts the Modbus Unit ID as a virtual slave ID and monitors devices with these virtual slave IDs. By default, the CLSS Gateway assigns a Modbus Unit ID to each node on the NFN network. The ID is equal to node number of the node. They can be changed, but should be within 1 to 99. Refer to the 7.15 "To Configure the Modbus Settings" section for more information about changing a Modbus Unit ID.
Modbus	Initial Delay: 0 ms Response Time-out: 1000 ms

7.24.3 Connecting the Moxa MGate MB3180 Interface

NOTE: The configuration used must have the approval of the AHJ (Authority Having Jurisdiction).

1. Connect the RTU master to the Serial port (RS-232, RS-485, or RS-422) of MB3180.
2. Connect the MB3180 to the CLSS Gateway.

   Figures 7.8 and 7.9 show possible configurations for connecting the CLSS Gateway to the Moxa interface.
3. Power up the system.

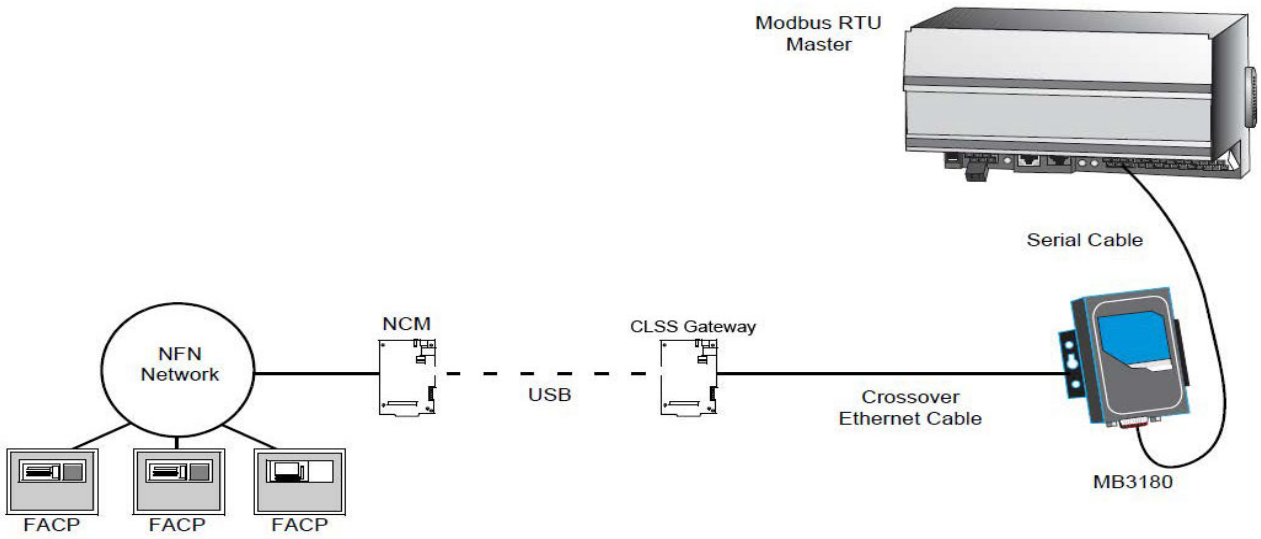

Figure 7.8: Connection Through Crossover Ethernet Cable

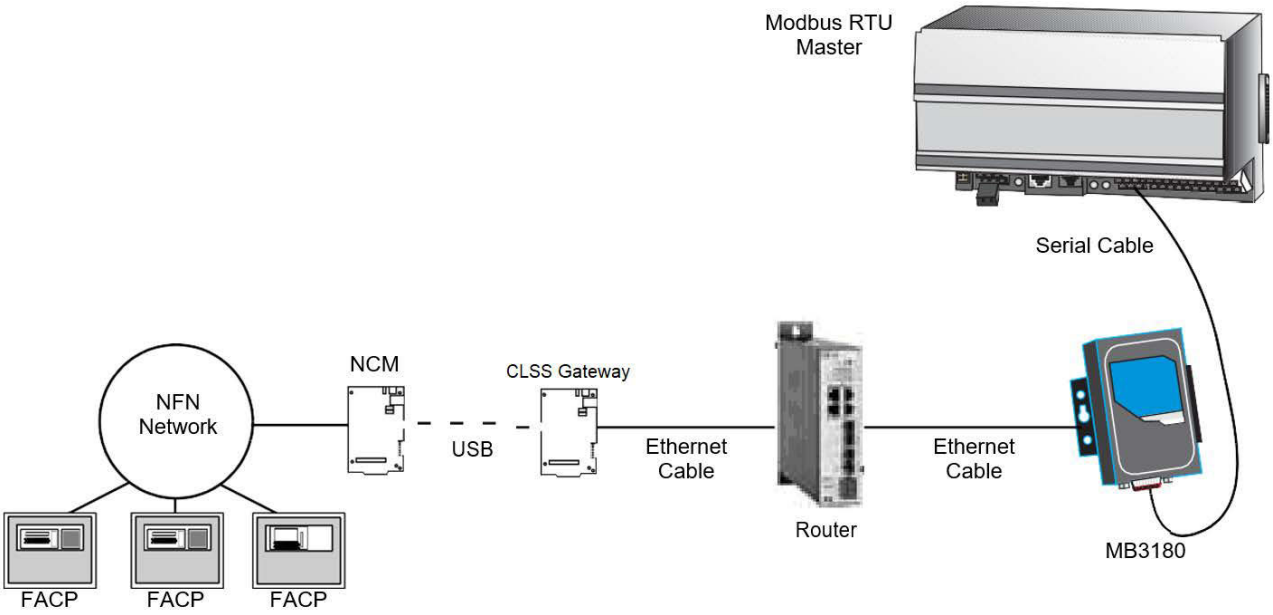

Figure 7.9: Connection Through a Router

7.25 System Trouble

For information about system trouble information stored in holding registers, refer to "Panel and System Troubles Holding Registers".

7.26 Exception Responses

If a Modbus master device sends an invalid command or attempts to read an invalid holding register, an exception response is generated. The exception response follows the standard packet format. The high order bit of the function code in an exception response is 1. The data field of an exception response contains the exception error code. The table describes the exception codes sup- ported and the possible causes.

Table 7.43: Exception Codes and Their Details

Exception Code	Conditions	Exception Name
0x01	Protocol Identifier in Modbus packet does not match Modbus protocol. Protocol Identifier in Modbus should always be “0”. Function code sent by the client is not supported by the CLSS Gateway or the FACP. A Control command was sent to the gateway. Contact customer service.	Illegal function
0x02	Register address range specified by the client is not supported by the FACP. Register address range requested is valid but the device (e.g. Detector, Module, Zone, etc.) is not present in the specified FACP. Analog Value is requested from a register which is not associated with a 4–20 mA device.	Illegal data address

Table 7.43: Exception Codes and Their Details *(Continued)*

0x03	Number of registers requested exceeds the maximum allowed limit. The maximum number of registers that a client can read at one time is 100. The exception to this is for analog values where the maximum number of registers a client can read at one time is 10. Invalid Data written to the register when sending commands.	Illegal data value
0x0A	Unit ID specified in the request packet is not configured for monitoring.	Gateway path failed
0x0B	FACP is off line or there is a communication problem on the panel and/or NFN.	Gateway target failed

7.27 CLSS Gateway Active Event Code

All events are mapped into Modbus event categories which are stored in the Modbus register.

Table 7.44: Event Code and Event Details

Event	Modbus Register Value
No Active Status (see note)	00H
Mass Notification Alarm, High Priority	05H
Fire Alarm	10H
Security Alarm (Life)	11H
Critical Process Alarm (Life)	12H
Medical Emergency (Life)	13H
CO Alarm	14H
Mass Notification Alarm, Low Priority	15H
Security Alarm (Property)	20H
Critical Process (Property)	21H
Mass Notification Supervisory, High Priority	25H
Supervisory Signal (Guard's Tour)	30H
Supervisory Signal (Equipment)	40H
Mass Notification Supervisory, Low Priority	45H
Disabled Alarm (AFP2800 Panel Only)	52H
Disabled Active (AFP2800 Panel Only)	55H
Non-Fire Activation	71H
Non-Fire Activation (no acknowledgment required)	72H
CO Alarm & Fire Alarm	EAH
CO Supervisory	EBH
CO Supervisory & Photo Supervisory	ECH
CO Supervisory & Fire Alarm	EDH
CO Alarm & Photo Supervisory	EEH
Device Not Present	FFH

Table 7.44: Event Code and Event Details *(Continued)*

For Gamewell-FCI	
General Alarm	18H
Gas Alarm	22H
CO Supervisory	42H

NOTE: Multiple states are possible for a device. For example, a device connected to a Fire Alarm Control Panel may be both Active and Disabled. Also, a device may be in the Trouble and Fire Alarm states at one time.

"No Active Status" does not indicate the point/device is in a normal state. The holding register for the point or device contains more detail. For more information, refer to 7.20 "Register Mapping".

7.28 Device Types

Device types are organized into the following categories:

- Detectors (1–50) - Table 7.45: "Device Type Values - Detectors"
- Modules (51–150) - Table 7.46: "Device Type Values – Modules"

Table 7.45: Device Type Values - Detectors

Device Type	Value	Device Type	Value
Not Identified	0000H	Wireless Smoke Photo Tracking	0311H
Heat	0100H	Smoke Laser Latching	0400H
Heat (rate of rise)	0101H	Smoke Laser Tracking	0401H
Heat (fixed)	0102H	Duct Smoke Laser Latching	0402H
Heat (high heat)	0103H	Duct Smoke Laser Tracking	0403H
Wireless Heat	0110H	Air Reference Laser	0404H
Wireless Heat (rate of rise)	0111H	Smoke (Harsh)	0500H
Wireless Heat (fixed)	0112H	Smoke (Beam)	0501H
Wireless (high heat)	0113H	Smoke Multi	0600H
Smoke Ion Latching	0200H	Smoke Acclimate	0601H
Smoke Ion Tracking	0201H	Wireless Smoke Multi	0610H
Duct Smoke Ion Latching	0202H	Wireless Smoke Acclimate	0611H
Duct Smoke Ion Tracking	0203H	CO Alarm	0700H
Smoke Photo Latching	0300H	Fire/CO	0701H
Smoke Photo Tracking	0301H	Photo/CO	0702H
Duct Smoke Photo Latching	0302H	CO/Photo/Thermal/IR	0703H
Duct Smoke Photo Tracking	0303H	Aspiration	0801H
Smoke (Photo Flame)	0304H	Aspir. Ref	0802H
Wireless Smoke Photo Latching	0310H		

Table 7.46: Device Type Values – Modules

Device Type	Value	Device Type	Value
Not Identified	0000H	Acknowledge Switch	0041H
Heat Detection Circuit	0001H	Wireless Acknowledge Switch	0042H
Wireless Heat Detection Circuit	0002H	All Call Page	0043H
Conventional Smoke	0003H	Drill Switch	0044H
Wireless Conventional Smoke	0004H	Wireless Drill Switch	0045H
Smoke Detection	0005H	Evacuate Switch	0046H
Wireless Smoke Detection	0006H	Wireless Evacuate Switch	0047H
Monitor	0010H	Signals Silence Switch	0048H
Wireless Monitor	0011H	Wireless Signals Silence Switch	0049H
Pull Station	0012H	Reset Switch	004AH
Wireless Pull Station	0013H	Wireless Reset Switch	004BH
Monitor Tracking	0014H	Fire Control	0050H
Wireless Monitor Tracking	0015H	Hazard	0051H
Normally Closed Monitor	0016H	Wireless Hazard	0052H
Wireless Normally Closed Monitor	0017H	Medical	0053H
Normally Closed Monitor Tracking	0018H	Wireless Medical	0054H
Wireless Normally Closed Monitor Tracking	0019H	Relay	1002H
Disable	001AH	Wireless Relay	1003H
Wireless Disable	001BH	Non-reset Control	1004H
Waterflow	0020H	Wireless Non-Reset Control	1005H
Wireless Waterflow	0021H	Bell Circuit	1010H
Sprinkler System	0022H	Strobe Circuit	1011H
Access Monitor	0030H	Horn Circuit	1012H
Wireless Access Monitor	0031H	Speaker Circuit	1013H
Area Monitor	0032H	Speaker	1014H
Wireless Area Monitor	0033H	Telephone	1015H
Equipment Monitor	0034H	Isolated Speaker	1016H
Wireless Equipment Monitor	0035H	Isolated Notification Appliance Circuit	1017H
Hold Up	0036H	Releasing Circuit	1020H
Wireless Hold Up	0037H	Releasing Circuit ULC	1021H
Tamper	0038H	Releasing Form C	1022H
Wireless Tamper	0039H	Releasing Bell	1023H
Secure/Access	003AH	Releasing Audible	1024H
Telephone Page	0040H	Instant Release	1030H
Weather	0055H	Alarms Pending	1031H

Device Type	Value	Device Type	Value
Wireless Weather	0056H	Control Notification Appliance Circuit	1032H
Positive Alarm Sequence Inhibit Input	0060H	General Alarm	1033H
Abort Switch	0061H	General Supervisory	1034H
Manual Release	0062H	General Trouble	1035H
Manual Release Delay	0063H	General Pending	1036H
Second Shot	0064H	Trouble Pending	1037H
Audio System	0070H	Form C Reset	1038H
Power Supply	0071H	Relay Feedback	1040H
Wireless System	0072H	Relay Form C Feedback	1041H
Bi-Directional Amplifier/Distributed Antenna System	0073H	Control Feedback	1042H
Process Monitor	0080H	ECS/MNS General	1050H
Process Auto	0081H	ECS/MNS Control	1051H
4-20mA sensor	0090H	ECS/MNS Strobe	1052H
Wireless 4-20mA sensor	0091H	ECS/MNS Speaker	1053H
Feedback	00A0H	ECS/MNS Relay	1054H
Feedback Tracking	00A1H	Auxiliary	1060H
Hydrant	00A2H	Door Holder	1061H
Control	1000H	AAM Sounder	1062H
Wireless Control	1001H	TYPE 5 Control	1063H

7.29 System Troubles Register Map

Register	Bit No.	System Trouble Name	Bit No.	System Trouble Name
460001	0	GROUND FAULT	8	INTERNAL RAM ERROR
	1	AC FAIL	9	EXTERNAL RAM ERROR
	2	BATTERY	10	PROGRAM CORRUPTED
	3	STYLE 6 POS. LOOP 1	11	NO DEV. INST ON L1
	4	STYLE 6 POS. LOOP 2	12	PANEL DOOR OPEN
	5	CORRUPT LOGIC EQUAT	13	AUXILIARY TROUBLE
	6	LCD80 SUPERVISORY	14	TERM. SUPERVISORY
	7	EPROM ERROR / FLASH IMAGE ERROR	15	ANNUN. 1 TROUBLE

Register	Bit No.	System Trouble Name	Bit No.	System Trouble Name
460002	0	ANNUN. 1 NO ANSWER	8	ANNUN. 5 NO ANSWER
	1	ANNUN. 2 TROUBLE	9	ANNUN. 6 TROUBLE
	2	ANNUN. 2 NO ANSWER	10	ANNUN. 6 NO ANSWER
	3	ANNUN. 3 TROUBLE	11	ANNUN. 7 TROUBLE
	4	ANNUN. 3 NO ANSWER	12	ANNUN. 7 NO ANSWER
	5	ANNUN. 4 TROUBLE	13	ANNUN. 8 TROUBLE
	6	ANNUN. 4 NO ANSWER	14	ANNUN. 8 NO ANSWER
	7	ANNUN. 5 TROUBLE	15	ANNUN. 9 TROUBLE
460003	0	ANNUN. 9 NO ANSWER	8	ANNUN.13 NO ANSWER
	1	ANNUN.10 TROUBLE	9	ANNUN.14 TROUBLE
	2	ANNUN.10 NO ANSWER	10	ANNUN.14 NO ANSWER
	3	ANNUN.11 TROUBLE	11	ANNUN.15 TROUBLE
	4	ANNUN.11 NO ANSWER	12	ANNUN.15 NO ANSWER
	5	ANNUN.12 TROUBLE	13	ANNUN.16 TROUBLE
	6	ANNUN.12 NO ANSWER	14	ANNUN.16 NO ANSWER
	7	ANNUN.13 TROUBLE	15	ANNUN.17 TROUBLE
460004	0	ANNUN.17 NO ANSWER	8	ANNUN.21 NO ANSWER
	1	ANNUN.18 TROUBLE	9	ANNUN.22 TROUBLE
	2	ANNUN.18 NO ANSWER	10	ANNUN.22 NO ANSWER
	3	ANNUN.19 TROUBLE	11	ANNUN.23 TROUBLE
	4	ANNUN.19 NO ANSWER	12	ANNUN.23 NO ANSWER
	5	ANNUN.20 TROUBLE	13	ANNUN.24 TROUBLE
	6	ANNUN.20 NO ANSWER	14	ANNUN.24 NO ANSWER
	7	ANNUN.21 TROUBLE	15	ANNUN.25 TROUBLE
460005	0	ANNUN.25 NO ANSWER	8	ANNUN.29 NO ANSWER
	1	ANNUN.26 TROUBLE	9	ANNUN.30 TROUBLE
	2	ANNUN.26 NO ANSWER	10	ANNUN.30 NO ANSWER
	3	ANNUN.27 TROUBLE	11	ANNUN.31 TROUBLE
	4	ANNUN.27 NO ANSWER	12	ANNUN.31 NO ANSWER
	5	ANNUN.28 TROUBLE	13	ANNUN.32 TROUBLE
	6	ANNUN.28 NO ANSWER	14	ANNUN.32 NO ANSWER
	7	ANNUN.29 TROUBLE	15	NETWORK FAIL PORT A

Register	Bit No.	System Trouble Name	Bit No.	System Trouble Name
460006	0	NETWORK FAIL PORT B	8	UDACT TROUBLE
	1	NETWORK FAILURE	9	UDACT NO ANSWER
	2	ADV WALK TEST	10	PROG MODE ACTIVATED
	3	CHARGER FAIL	11	LOADING..NO SERVICE
	4	GROUND FAULT LOOP 2	12	BASIC WALK TEST
	5	STYLE 6 NEG. LOOP 1	13	NFPA 24HR REMINDER
	6	STYLE 6 NEG. LOOP 2	14	NVRAM BATT TROUBLE
	7	GROUND FAULT LOOP 1	15	Reserved
460007	0	Reserved	8	OPTION MODULE
	1	Reserved	9	STYLE 6 ON LOOP 3
	2	Reserved	10	AVPS. TROUBLE
	3	Reserved	11	NAM CCBE PROG. LOST
	4	Reserved	12	MAN. EVAC INITIATED
	5	Reserved	13	MAN. EVAC RECEIVED
	6	Reserved	14	Reserved
	7	Reserved	15	Reserved
460008	0	ANNUN.33 TROUBLE	8	ANNUN.37 TROUBLE
	1	ANNUN.33 NO ANSWER	9	ANNUN.37 NO ANSWER
	2	ANNUN.34 TROUBLE	10	ANNUN.38 TROUBLE
	3	ANNUN.34 NO ANSWER	11	ANNUN.38 NO ANSWER
	4	ANNUN.35 TROUBLE	12	ANNUN.39 TROUBLE
	5	ANNUN.35 NO ANSWER	13	ANNUN.39 NO ANSWER
	6	ANNUN.36 TROUBLE	14	ANNUN.40 TROUBLE
	7	ANNUN.36 NO ANSWER	15	ANNUN.40 NO ANSWER
460009	0	ANNUN.41 TROUBLE	8	ANNUN.45 TROUBLE
	1	ANNUN.41 NO ANSWER	9	ANNUN.45 NO ANSWER
	2	ANNUN.42 TROUBLE	10	ANNUN.46 TROUBLE
	3	ANNUN.42 NO ANSWER	11	ANNUN.46 NO ANSWER
	4	ANNUN.43 TROUBLE	12	ANNUN.47 TROUBLE
	5	ANNUN.43 NO ANSWER	13	ANNUN.47 NO ANSWER
	6	ANNUN.44 TROUBLE	14	ANNUN.48 TROUBLE
	7	ANNUN.44 NO ANSWER	15	ANNUN.48 NO ANSWER

Register	Bit No.	System Trouble Name	Bit No.	System Trouble Name
460010	0	ANNUN.49 TROUBLE	8	ANNUN.53 TROUBLE
	1	ANNUN.49 NO ANSWER	9	ANNUN.53 NO ANSWER
	2	ANNUN.50 TROUBLE	10	ANNUN.54 TROUBLE
	3	ANNUN.50 NO ANSWER	11	ANNUN.54 NO ANSWER
	4	ANNUN.51 TROUBLE	12	ANNUN.55 TROUBLE
	5	ANNUN.51 NO ANSWER	13	ANNUN.55 NO ANSWER
	6	ANNUN.52 TROUBLE	14	ANNUN.56 TROUBLE
	7	ANNUN.52 NO ANSWER	15	ANNUN.56 NO ANSWER
460011	0	ANNUN.57 TROUBLE	8	ANNUN.61 TROUBLE
	1	ANNUN.57 NO ANSWER	9	ANNUN.61 NO ANSWER
	2	ANNUN.58 TROUBLE	10	ANNUN.62 TROUBLE
	3	ANNUN.58 NO ANSWER	11	ANNUN.62 NO ANSWER
	4	ANNUN.59 TROUBLE	12	ANNUN.63 TROUBLE
	5	ANNUN.59 NO ANSWER	13	ANNUN.63 NO ANSWER
	6	ANNUN.60 TROUBLE	14	ANNUN.64 TROUBLE
	7	ANNUN.60 NO ANSWER	15	ANNUN.64 NO ANSWER
460012	0	GROUND FAULT LOOP 3	8	STYLE 6 NEG. LOOP 3
	1	GROUND FAULT LOOP 4	9	STYLE 6 NEG. LOOP 4
	2	GROUND FAULT LOOP 5	10	STYLE 6 NEG. LOOP 5
	3	GROUND FAULT LOOP 6	11	STYLE 6 NEG. LOOP 6
	4	GROUND FAULT LOOP 7	12	STYLE 6 NEG. LOOP 7
	5	GROUND FAULT LOOP 8	13	STYLE 6 NEG. LOOP 8
	6	GROUND FAULT LOOP 9	14	STYLE 6 NEG. LOOP 9
	7	GROUND FAULT LOOP 10	15	STYLE 6 NEG. LOOP 10
460013	0	STYLE 6 POS. LOOP 3	8	PRINTER SUPERVISORY
	1	STYLE 6 POS. LOOP 4	9	BUZZER SUPERVISORY
	2	STYLE 6 POS. LOOP 5	10	CRT SUPERVISORY
	3	STYLE 6 POS. LOOP 6	11	PRINT QUEUE FULL
	4	STYLE 6 POS. LOOP 7	12	MEMORY LOSS
	5	STYLE 6 POS. LOOP 8	13	PRINTER COVER OPEN
	6	STYLE 6 POS. LOOP 9	14	PRINTER PAPER OUT
	7	STYLE 6 POS. LOOP 10	15	PRINTER OFF LINE

Register	Bit No.	System Trouble Name	Bit No.	System Trouble Name
460014	0	Workstation Fan Failure	8	STYLE 4 SHORT A LOOP 3
	1	UPS Failure	9	STYLE 4 SHORT B LOOP 3
	2	MANUAL MODE ENTERED	10	STYLE 4 SHORT A LOOP 4
	3	NCM COMM LOSS	11	STYLE 4 SHORT B LOOP 4
	4	STYLE 4 SHORT A LOOP 1	12	STYLE 4 SHORT A LOOP 5
	5	STYLE 4 SHORT B LOOP 1	13	STYLE 4 SHORT B LOOP 5
	6	STYLE 4 SHORT A LOOP 2	14	STYLE 4 SHORT A LOOP 6
	7	STYLE 4 SHORT B LOOP 2	15	STYLE 4 SHORT B LOOP 6
460015	0	STYLE 4 SHORT A LOOP 7	8	GENERAL PS FAULT / POWER SUPPLY TROUBLE
	1	STYLE 4 SHORT B LOOP 7	9	STYLE 6 SHORT LOOP 1
	2	STYLE 4 SHORT A LOOP 8	10	STYLE 6 SHORT LOOP 2
	3	STYLE 4 SHORT B LOOP 8	11	STYLE 6 SHORT LOOP 3
	4	STYLE 4 SHORT A LOOP 9	12	STYLE 6 SHORT LOOP 4
	5	STYLE 4 SHORT B LOOP 9	13	STYLE 6 SHORT LOOP 5
	6	STYLE 4 SHORT A LOOP 10	14	STYLE 6 SHORT LOOP 6
	7	STYLE 4 SHORT B LOOP 10	15	STYLE 6 SHORT LOOP 7
460016	0	STYLE 6 SHORT LOOP 8	8	TM4 NO ANSWER
	1	STYLE 6 SHORT LOOP 9	9	TM4 DISABLED
	2	STYLE 6 SHORT LOOP 10	10	SELF TEST FAILED
	3	NODE xxx COMMUNICATIONS FAILURE	11	NETWORK INCOMPATIBILITY
	4	NCM PIEZO BATTERY FAILURE	12	WORKSTATION FAILURE
	5	DVC COMM LOSS	13	NETWORK MAPPING LIMIT EXCEEDED
	6	POWER SUPPLY CABLE NOT CONNECTED	14	INVALID NODE TYPE
	7	TM4 TROUBLE	15	DISPLAY NODE LIMIT EXCEEDED
460017	0	ANNUN. 65 TROUBLE	8	ANNUN. 69 TROUBLE
	1	ANNUN. 65 NO ANSWER	9	ANNUN. 69 NO ANSWER
	2	ANNUN. 66 TROUBLE	10	ANNUN. 70 TROUBLE
	3	ANNUN. 66 NO ANSWER	11	ANNUN. 70 NO ANSWER
	4	ANNUN. 67 TROUBLE	12	ANNUN. 71 TROUBLE
	5	ANNUN. 67 NO ANSWER	13	ANNUN. 71 NO ANSWER
	6	ANNUN. 68 TROUBLE	14	ANNUN. 72 TROUBLE
	7	ANNUN. 68 NO ANSWER	15	ANNUN. 72 NO ANSWER

Register	Bit No.	System Trouble Name	Bit No.	System Trouble Name
460018	0	ANNUN. 73 TROUBLE	8	ANNUN. 77 TROUBLE
	1	ANNUN. 73 NO ANSWER	9	ANNUN. 77 NO ANSWER
	2	ANNUN. 74 TROUBLE	10	ANNUN. 78 TROUBLE
	3	ANNUN. 74 NO ANSWER	11	ANNUN. 78 NO ANSWER
	4	ANNUN. 75 TROUBLE	12	ANNUN. 79 TROUBLE
	5	ANNUN. 75 NO ANSWER	13	ANNUN. 79 NO ANSWER
	6	ANNUN. 76 TROUBLE	14	ANNUN. 80 TROUBLE
	7	ANNUN. 76 NO ANSWER	15	ANNUN. 80 NO ANSWER
460019	0	ANNUN. 81 TROUBLE	8	ANNUN. 85 TROUBLE
	1	ANNUN. 81 NO ANSWER	9	ANNUN. 85 NO ANSWER
	2	ANNUN. 82 TROUBLE	10	ANNUN. 86 TROUBLE
	3	ANNUN. 82 NO ANSWER	11	ANNUN. 86 NO ANSWER
	4	ANNUN. 83 TROUBLE	12	ANNUN. 87 TROUBLE
	5	ANNUN. 83 NO ANSWER	13	ANNUN. 87 NO ANSWER
	6	ANNUN. 84 TROUBLE	14	ANNUN. 88 TROUBLE
	7	ANNUN. 84 NO ANSWER	15	ANNUN. 88 NO ANSWER
460020	0	ANNUN. 89 TROUBLE	8	ANNUN. 93 TROUBLE
	1	ANNUN. 89 NO ANSWER	9	ANNUN. 93 NO ANSWER
	2	ANNUN. 90 TROUBLE	10	ANNUN. 94 TROUBLE
	3	ANNUN. 90 NO ANSWER	11	ANNUN. 94 NO ANSWER
	4	ANNUN. 91 TROUBLE	12	ANNUN. 95 TROUBLE
	5	ANNUN. 91 NO ANSWER	13	ANNUN. 95 NO ANSWER
	6	ANNUN. 92 TROUBLE	14	ANNUN. 96 TROUBLE
	7	ANNUN. 92 NO ANSWER	15	ANNUN. 96 NO ANSWER
460021	0	ANNUN. 97 TROUBLE	8	ANNUN. 101 TROUBLE
	1	ANNUN. 97 NO ANSWER	9	ANNUN. 101 NO ANSWER
	2	ANNUN. 98 TROUBLE	10	ANNUN. 102 TROUBLE
	3	ANNUN. 98 NO ANSWER	11	ANNUN. 102 NO ANSWER
	4	ANNUN. 99 TROUBLE	12	ANNUN. 103 TROUBLE
	5	ANNUN. 99 NO ANSWER	13	ANNUN. 103 NO ANSWER
	6	ANNUN. 100 TROUBLE	14	ANNUN. 104 TROUBLE
	7	ANNUN. 100 NO ANSWER	15	ANNUN. 104 NO ANSWER

Register	Bit No.	System Trouble Name	Bit No.	System Trouble Name
460022	0	ANNUN. 105 TROUBLE	8	ANNUN. 109 TROUBLE
	1	ANNUN. 105 NO ANSWER	9	ANNUN. 109 NO ANSWER
	2	ANNUN. 106 TROUBLE	10	ANNUN. 110 TROUBLE
	3	ANNUN. 106 NO ANSWER	11	ANNUN. 110 NO ANSWER
	4	ANNUN. 107 TROUBLE	12	ANNUN. 111 TROUBLE
	5	ANNUN. 107 NO ANSWER	13	ANNUN. 111 NO ANSWER
	6	ANNUN. 108 TROUBLE	14	ANNUN. 112 TROUBLE
	7	ANNUN. 108 NO ANSWER	15	ANNUN. 112 NO ANSWER
460023	0	ANNUN. 113 TROUBLE	8	ANNUN. 117 TROUBLE
	1	ANNUN. 113 NO ANSWER	9	ANNUN. 117 NO ANSWER
	2	ANNUN. 114 TROUBLE	10	ANNUN. 118 TROUBLE
	3	ANNUN. 114 NO ANSWER	11	ANNUN. 118 NO ANSWER
	4	ANNUN. 115 TROUBLE	12	ANNUN. 119 TROUBLE
	5	ANNUN. 115 NO ANSWER	13	ANNUN. 119 NO ANSWER
	6	ANNUN. 116 TROUBLE	14	ANNUN. 120 TROUBLE
	7	ANNUN. 116 NO ANSWER	15	ANNUN. 120 NO ANSWER
460024	0	ANNUN. 121 TROUBLE	8	ANNUN. 125 TROUBLE
	1	ANNUN. 121 NO ANSWER	9	ANNUN. 125 NO ANSWER
	2	ANNUN. 122 TROUBLE	10	ANNUN. 126 TROUBLE
	3	ANNUN. 122 NO ANSWER	11	ANNUN. 126 NO ANSWER
	4	ANNUN. 123 TROUBLE	12	ANNUN. 127 TROUBLE
	5	ANNUN. 123 NO ANSWER	13	ANNUN. 127 NO ANSWER
	6	ANNUN. 124 TROUBLE	14	ANNUN. 128 TROUBLE
	7	ANNUN. 124 NO ANSWER	15	ANNUN. 128 NO ANSWER
460025	0	REMOTE DISPLAY 1 TROUBLE	8	REMOTE DISPLAY 5 TROUBLE
	1	REMOTE DISPLAY 1 NO ANSWER	9	REMOTE DISPLAY 5 NO ANSWER
	2	REMOTE DISPLAY 2 TROUBLE	10	REMOTE DISPLAY 6 TROUBLE
	3	REMOTE DISPLAY 2 NO ANSWER	11	REMOTE DISPLAY 6 NO ANSWER
	4	REMOTE DISPLAY 3 TROUBLE	12	REMOTE DISPLAY 7 TROUBLE
	5	REMOTE DISPLAY 3 NO ANSWER	13	REMOTE DISPLAY 7 NO ANSWER
	6	REMOTE DISPLAY 4 TROUBLE	14	REMOTE DISPLAY 8 TROUBLE
	7	REMOTE DISPLAY 4 NO ANSWER	15	REMOTE DISPLAY 8 NO ANSWER

Register	Bit No.	System Trouble Name	Bit No.	System Trouble Name
460026	0	REMOTE DISPLAY 9 TROUBLE	8	REMOTE DISPLAY 13 TROUBLE
	1	REMOTE DISPLAY 9 NO ANSWER	9	REMOTE DISPLAY 13 NO ANSWER
	2	REMOTE DISPLAY 10 TROUBLE	10	REMOTE DISPLAY 14 TROUBLE
	3	REMOTE DISPLAY 10 NO ANSWER	11	REMOTE DISPLAY 14 NO ANSWER
	4	REMOTE DISPLAY 11 TROUBLE	12	REMOTE DISPLAY 15 TROUBLE
	5	REMOTE DISPLAY 11 NO ANSWER	13	REMOTE DISPLAY 15 NO ANSWER
	6	REMOTE DISPLAY 12 TROUBLE	14	REMOTE DISPLAY 16 TROUBLE
	7	REMOTE DISPLAY 12 NO ANSWER	15	REMOTE DISPLAY 16 NO ANSWER
460027	0	REMOTE DISPLAY 17 TROUBLE	8	REMOTE DISPLAY 21 TROUBLE
	1	REMOTE DISPLAY 17 NO ANSWER	9	REMOTE DISPLAY 21 NO ANSWER
	2	REMOTE DISPLAY 18 TROUBLE	10	REMOTE DISPLAY 22 TROUBLE
	3	REMOTE DISPLAY 18 NO ANSWER	11	REMOTE DISPLAY 22 NO ANSWER
	4	REMOTE DISPLAY 19 TROUBLE	12	REMOTE DISPLAY 23 TROUBLE
	5	REMOTE DISPLAY 19 NO ANSWER	13	REMOTE DISPLAY 23 NO ANSWER
	6	REMOTE DISPLAY 20 TROUBLE	14	REMOTE DISPLAY 24 TROUBLE
	7	REMOTE DISPLAY 20 NO ANSWER	15	REMOTE DISPLAY 24 NO ANSWER
460028	0	REMOTE DISPLAY 25 TROUBLE	8	REMOTE DISPLAY 29 TROUBLE
	1	REMOTE DISPLAY 25 NO ANSWER	9	REMOTE DISPLAY 29 NO ANSWER
	2	REMOTE DISPLAY 26 TROUBLE	10	REMOTE DISPLAY 30 TROUBLE
	3	REMOTE DISPLAY 26 NO ANSWER	11	REMOTE DISPLAY 30 NO ANSWER
	4	REMOTE DISPLAY 27 TROUBLE	12	REMOTE DISPLAY 31 TROUBLE
	5	REMOTE DISPLAY 27 NO ANSWER	13	REMOTE DISPLAY 31 NO ANSWER
	6	REMOTE DISPLAY 28 TROUBLE	14	REMOTE DISPLAY 32 TROUBLE
	7	REMOTE DISPLAY 28 NO ANSWER	15	REMOTE DISPLAY 32 NO ANSWER

Register	Bit No.	System Trouble Name	Bit No.	System Trouble Name
460029	0	SYSTEM INITIALIZATION	8	Reserved
	1	POWER SUPPLY COMM FAILURE	9	Reserved
	2	Reserved	10	Reserved
	3	Reserved	11	Reserved
	4	Reserved	12	Reserved
	5	Reserved	13	Reserved
	6	Reserved	14	Reserved
	7	Reserved	15	Reserved
460030	0	Reserved	8	Reserved
	1	Reserved	9	Reserved
	2	Reserved	10	Reserved
	3	Reserved	11	Reserved
	4	Reserved	12	Reserved
	5	Reserved	13	Reserved
	6	Reserved	14	Reserved
	7	Reserved	15	Reserved
460031	0	Reserved	8	Reserved
	1	Reserved	9	Reserved
	2	Reserved	10	Reserved
	3	Reserved	11	Reserved
	4	Reserved	12	Reserved
	5	Reserved	13	Reserved
	6	Reserved	14	Reserved
	7	Reserved	15	Reserved
460032	0	Reserved	8	NO POWER SUPPLY INST
	1	Reserved	9	LOOP 1-2 COMM FAILURE
	2	LINK PROTECTOR PRIMARY STATUS	10	LOOP 3-4 COMM FAILURE
	3	LINK PROTECTOR SECONDARY STATUS	11	LOOP 5-6 COMM FAILURE
	4	LINK PROTECTOR NOT PRESENT	12	LOOP 7-8 COMM FAILURE
	5	EVENT BUFFER 80% FULL / HISTORY 80% FULL	13	LOOP 9-10 COMM FAILURE
	6	EBI STATUS	14	TEST PROGRAM UPDATE
	7	SOFTWARE MISMATCH	15	Reserved

Register	Bit No.	System Trouble Name	Bit No.	System Trouble Name
460033	0	LOOP CONTINUITY TEST FAIL LOOP 1	8	LOOP CONTINUITY TEST FAIL LOOP 9
	1	LOOP CONTINUITY TEST FAIL LOOP 2	9	LOOP CONTINUITY TEST FAIL LOOP 10
	2	LOOP CONTINUITY TEST FAIL LOOP 3	10	UNPROGRAMMED DEVICE ON LOOP 1
	3	LOOP CONTINUITY TEST FAIL LOOP 4	11	UNPROGRAMMED DEVICE ON LOOP 2
	4	LOOP CONTINUITY TEST FAIL LOOP 5	12	UNPROGRAMMED DEVICE ON LOOP 3
	5	LOOP CONTINUITY TEST FAIL LOOP 6	13	UNPROGRAMMED DEVICE ON LOOP 4
	6	LOOP CONTINUITY TEST FAIL LOOP 7	14	UNPROGRAMMED DEVICE ON LOOP 5
	7	LOOP CONTINUITY TEST FAIL LOOP 8	15	UNPROGRAMMED DEVICE ON LOOP 6
460034	0	UNPROGRAMMED DEVICE ON LOOP 7	8	IR ENABLED ON LOOP 5
	1	UNPROGRAMMED DEVICE ON LOOP 8	9	IR ENABLED ON LOOP 6
	2	UNPROGRAMMED DEVICE ON LOOP 9	10	IR ENABLED ON LOOP 7
	3	UNPROGRAMMED DEVICE ON LOOP 10	11	IR ENABLED ON LOOP 8
	4	IR ENABLED ON LOOP 1	12	IR ENABLED ON LOOP 9
	5	IR ENABLED ON LOOP 2	13	IR ENABLED ON LOOP 10
	6	IR ENABLED ON LOOP 3	14	TRANSMIT/RECIEVE ERROR ABOVE LIMIT ON LOOP 1
	7	IR ENABLED ON LOOP 4	15	TRANSMIT/RECIEVE ERROR ABOVE LIMIT ON LOOP 2
460035	0	TRANSMIT/RECIEVE ERROR ABOVE LIMIT ON LOOP 3	8	TOO MANY DEVICES ON LOOP 1
	1	TRANSMIT/RECIEVE ERROR ABOVE LIMIT ON LOOP 4	9	TOO MANY DEVICES ON LOOP 2
	2	TRANSMIT/RECIEVE ERROR ABOVE LIMIT ON LOOP 5	10	TOO MANY DEVICES ON LOOP 3
	3	TRANSMIT/RECIEVE ERROR ABOVE LIMIT ON LOOP 6	11	TOO MANY DEVICES ON LOOP 4
	4	TRANSMIT/RECIEVE ERROR ABOVE LIMIT ON LOOP 7	12	TOO MANY DEVICES ON LOOP 5
	5	TRANSMIT/RECIEVE ERROR ABOVE LIMIT ON LOOP 8	13	TOO MANY DEVICES ON LOOP 6
	6	TRANSMIT/RECIEVE ERROR ABOVE LIMIT ON LOOP 9	14	TOO MANY DEVICES ON LOOP 7
	7	TRANSMIT/RECIEVE ERROR ABOVE LIMIT ON LOOP 10	15	TOO MANY DEVICES ON LOOP 8

Register	Bit No.	System Trouble Name	Bit No.	System Trouble Name
460036	0	TOO MANY DEVICES ON LOOP 9	8	MISMATCHED LOOP TYPE ON LOOP 7
	1	TOO MANY DEVICES ON LOOP 10	9	MISMATCHED LOOP TYPE ON LOOP 8
	2	MISMATCHED LOOP TYPE ON LOOP 1	10	MISMATCHED LOOP TYPE ON LOOP 9
	3	MISMATCHED LOOP TYPE ON LOOP 2	11	MISMATCHED LOOP TYPE ON LOOP 10
	4	MISMATCHED LOOP TYPE ON LOOP 3	12	Ground Fault Port A
	5	MISMATCHED LOOP TYPE ON LOOP 4	13	Ground Fault Port B
	6	MISMATCHED LOOP TYPE ON LOOP 5	14	Amplifier Trouble
	7	MISMATCHED LOOP TYPE ON LOOP 6	15	AUXIN Trouble
460037	0	DIGIN Trouble	8	ANALOG OUTPUT A TROUBLE
	1	FFT TROUBLE	9	ANALOG OUTPUT B TROUBLE
	2	REMOTE MIC Trouble	10	ANALOG OUTPUT C TROUBLE
	3	DAP Port A Failure	11	ANALOG OUTPUT D TROUBLE
	4	DAP Port B Failure	12	Reserved
	5	DAL No Answer / DAL DEVICE NO ANSWER	13	Reserved
	6	LOCAL MIC TROUBLE	14	AMPLIFIER LIMIT
	7	LOCAL PHONE TROUBLE	15	AMPLIFIER SUPERVISION
460038	0	DAL ADDRESS CONFLICT	8	MAPPING IN PROGRESS LOOP 7
	1	DEVICE SERVICING REQUIRED	9	MAPPING IN PROGRESS LOOP 8
	2	MAPPING IN PROGRESS LOOP 1	10	MAPPING IN PROGRESS LOOP 9
	3	MAPPING IN PROGRESS LOOP 2	11	MAPPING IN PROGRESS LOOP 10
	4	MAPPING IN PROGRESS LOOP 3	12	DATABASE CORRUPTED
	5	MAPPING IN PROGRESS LOOP 4	13	AUDIO LIBRARY CORRUPTED
	6	MAPPING IN PROGRESS LOOP 5	14	DATABASE INCOMPATIBLE
	7	MAPPING IN PROGRESS LOOP 6	15	AUDIO LIBRARY INCOMPATIBLE

Register	Bit No.	System Trouble Name	Bit No.	System Trouble Name
460039	0	DAL DOWNLOAD IN PROGRESS	8	PRIMARY AMP 1 HARDWARE FAIL
	1	FIRE VOICE TROUBLE	9	PRIMARY AMP 2 HARDWARE FAIL
	2	FIRE VOICE NO ANSWER	10	PRIMARY AMP 3 HARDWARE FAIL
	3	PHONE CHANNEL LIMIT EXCEEDED	11	PRIMARY AMP 4 HARDWARE FAIL
	4	NCM SMIFFER MODE ACTIVE	12	BACKUP AMP 1 HARDWARE FAIL
	5	LOCAL CONNECTION LIMIT EXCEEDED	13	BACKUP AMP 2 HARDWARE FAIL
	6	HARDWARE MISMATCH	14	BACKUP AMP 3 HARDWARE FAIL
	7	Reserved	15	BACKUP AMP 4 HARDWARE FAIL
460040	0	DSBUS 1 COMMFAIL	8	PRIMARY AMP 2 LIMIT
	1	DSBUS 2 COMMFAIL	9	PRIMARY AMP 3 LIMIT
	2	DSBUS 3 COMMFAIL	10	PRIMARY AMP 4 LIMIT
	3	DSBUS 4 COMMFAIL	11	BACKUP AMP 1 LIMIT
	4	AA TROUBLE BUS FAIL	12	BACKUP AMP 2 LIMIT
	5	NFN PAGING CHANNEL LIMIT EXCEEDED	13	BACKUP AMP 3 LIMIT
	6	BACKUP AMP LIMIT	14	BACKUP AMP 4 LIMIT
	7	PRIMARY AMP 1 LIMIT	15	PRIMARY AMP 1 OVERCURRENT
460041	0	PRIMARY AMP 2 OVERCURRENT	8	PRIMARY AMP 2 TRIP
	1	PRIMARY AMP 3 OVERCURRENT	9	PRIMARY AMP 3 TRIP
	2	PRIMARY AMP 4 OVERCURRENT	10	PRIMARY AMP 4 TRIP
	3	BACKUP AMP 1 OVERCURRENT	11	BACKUP AMP 1 TRIP
	4	BACKUP AMP 2 OVERCURRENT	12	BACKUP AMP 2 TRIP
	5	BACKUP AMP 3 OVERCURRENT	13	BACKUP AMP 3 TRIP
	6	BACKUP AMP 4 OVERCURRENT	14	BACKUP AMP 4 TRIP
	7	PRIMARY AMP 1 TRIP	15	DSBUS 1 AC FAIL

Register	Bit No.	System Trouble Name	Bit No.	System Trouble Name
460042	0	DSBUS 2 AC FAIL	8	DSBUS 2 LOW BATT
	1	DSBUS 3 AC FAIL	9	DSBUS 3 LOW BATT
	2	DSBUS 4 AC FAIL	10	DSBUS 4 LOW BATT
	3	DSBUS 1 HIGH BATT	11	DSBUS 1 SELF TEST FAIL
	4	DSBUS 2 HIGH BATT	12	DSBUS 2 SELF TEST FAIL
	5	DSBUS 3 HIGH BATT	13	DSBUS 3 SELF TEST FAIL
	6	DSBUS 4 HIGH BATT	14	DSBUS 4 SELF TEST FAIL
	7	DSBUS 1 LOW BATT	15	PRIMARY AMP 1 FAIL
460043	0	PRIMARY AMP 2 FAIL	8	BACKUP AMP 1 NOT INSTALLED
	1	PRIMARY AMP 3 FAIL	9	BACKUP AMP 2 NOT INSTALLED
	2	PRIMARY AMP 4 FAIL	10	BACKUP AMP 3 NOT INSTALLED
	3	BACKUP AMP 1 FAIL	11	BACKUP AMP 4 NOT INSTALLED
	4	BACKUP AMP 2 FAIL	12	MODBUS COMMUNICATIONS FAULT
	5	BACKUP AMP 3 FAIL	13	VESDANET TROUBLE
	6	BACKUP AMP 4 FAIL	14	(Reserved)
	7	BACKUP AMP NOT INSTALLED	15	DOOR INTERLOCK FAULT
460044	0	ANNUN 01 TYPE MISMATCH	8	ANNUN 09 TYPE MISMATCH
	1	ANNUN 02 TYPE MISMATCH	9	ANNUN 10 TYPE MISMATCH
	2	ANNUN 03 TYPE MISMATCH	10	ANNUN 11 TYPE MISMATCH
	3	ANNUN 04 TYPE MISMATCH	11	ANNUN 12 TYPE MISMATCH
	4	ANNUN 05 TYPE MISMATCH	12	ANNUN 13 TYPE MISMATCH
	5	ANNUN 06 TYPE MISMATCH	13	ANNUN 14 TYPE MISMATCH
	6	ANNUN 07 TYPE MISMATCH	14	ANNUN 15 TYPE MISMATCH
	7	ANNUN 08 TYPE MISMATCH	15	ANNUN 16 TYPE MISMATCH
460045	0	ANNUN 17 TYPE MISMATCH	8	ANNUN 25 TYPE MISMATCH
	1	ANNUN 18 TYPE MISMATCH	9	ANNUN 26 TYPE MISMATCH
	2	ANNUN 19 TYPE MISMATCH	10	ANNUN 27 TYPE MISMATCH
	3	ANNUN 20 TYPE MISMATCH	11	ANNUN 28 TYPE MISMATCH
	4	ANNUN 21 TYPE MISMATCH	12	ANNUN 29 TYPE MISMATCH
	5	ANNUN 22 TYPE MISMATCH	13	ANNUN 30 TYPE MISMATCH
	6	ANNUN 23 TYPE MISMATCH	14	ANNUN 31 TYPE MISMATCH
	7	ANNUN 24 TYPE MISMATCH	15	ANNUN 32 TYPE MISMATCH

Register	Bit No.	System Trouble Name	Bit No.	System Trouble Name
460046	0	DISPLAY COMM LOSS	8	LOOP CARD 1 COMM LOSS
	1	ALARM DEVICES DISABLED	9	LOOP CARD 2 COMM LOSS
	2	SMOKE CONTROL DISABLED	10	LOOP CARD 3 COMM LOSS
	3	PANEL HAS REBOOTED	11	LOOP CARD 4 COMM LOSS
	4	ZONES DISABLED BY BRIGADE	12	LOOP CARD 5 COMM LOSS
	5	ALARM SIGNAL	13	LOOP CARD 6 COMM LOSS
	6	KERNEL CORRUPTED	14	LOOP CARD 7 COMM LOSS
	7	CHANGE SERVICE TOOL PASSWORD	15	LOOP CARD 8 COMM LOSS
460047	0	LOOP CARD 9 COMM LOSS	8	PMB 4 COMM LOSS
	1	LOOP CARD 10 COMM LOSS	9	PMB 5 COMM LOSS
	2	CHANGE MASTER USER PASSWORD	10	Recovery Partition Application Active
	3	PASSWORD DATABASE CORRUPTED	11	AIO COMM CLASS A TROUBLE
	4	Default database. Please program.	12	AC Failure (LSB is PMB address 1-5)
	5	PMB 1 COMM LOSS	13	Earth Fault (LSB is PMB address 1-5)
	6	PMB 2 COMM LOSS	14	Earth Fault Switch Mismatch (LSB is PMB address 1-5)
	7	PMB 3 COMM LOSS	15	Battery Low (LSB is PMB address 1-5)

Register	Bit No.	System Trouble Name	Bit No.	System Trouble Name
460048	0	Battery High (LSB is PMB address 1-5)	8	AIO Address 5 Comm Loss (LSB is 0 for router, 1-15 for peripheral)
	1	Battery Deep-Discharge (LSB is PMB address 1-5)	9	AIO Address 6 Comm Loss (LSB is 0 for router, 1-15 for peripheral)
	2	Charger Fail (LSB is PMB address 1-5)	10	AIO Address 7 Comm Loss (LSB is 0 for router, 1-15 for peripheral)
	3	Power Supply Failure (LSB is PMB address 1-5)	11	AIO Address 8 Comm Loss (LSB is 0 for router, 1-15 for peripheral)
	4	AIO Address 1 Comm Loss (LSB is 0 for router, 1-15 for peripheral)	12	AIO Address 9 Comm Loss (LSB is 0 for router, 1-15 for peripheral)
	5	AIO Address 2 Comm Loss (LSB is 0 for router, 1-15 for peripheral)	13	AIO Address 10 Comm Loss (LSB is 0 for router, 1-15 for peripheral)
	6	AIO Address 3 Comm Loss (LSB is 0 for router, 1-15 for peripheral)	14	(Reserved)
	7	AIO Address 4 Comm Loss (LSB is 0 for router, 1-15 for peripheral)	15	(Reserved)
460049	0	POTS Card No Answer / Missing	8	Ethernet 1 No Connectivity
	1	POTS Line 1 Failure	9	Ethernet 2 No Connectivity
	2	POTS Line 2 Failure	10	CLSS Cloud Communication Failure
	3	POTS Call (Alarm Routing) Failure	11	Ethernet/WiFi Alarm Routing Failure
	4	POTS Software Mismatch	12	Cellular Alarm Routing Failure
	5	Cellular Card No Answer / Missing	13	(Reserved)
	6	Cellular Card No Connectivity	14	(Reserved)
	7	WiFi No Connectivity	15	(Reserved)
460050	0	NAC Key Card Fault 1	8	NAC Key Card Fault 3
	1	NAC Key Card Fault 2	9	NAC Key Card Fault 4
	2	Municipal Circuit Supervision	10	Access Denied
	3	Internal Power Supply Fault	11	Walk Test
	4	Ground Fault Positive	12	POTS Call Secondary Failure
	5	Ground Fault Negative	13	DACT Fault
	6	Auxiliary Trouble 61	14	DACT Timeout 1
	7	24VDC FAULT	15	Access Granted 1

Register	Bit No.	System Trouble Name	Bit No.	System Trouble Name
460051	0	Access Granted 2	8	LCD80 Supervisory 3
	1	Access Granted 3	9	LCD80 Supervisory 4
	2	Access Granted 4	10	LCD80 Supervisory 5
	3	Access Granted 5	11	LCD80 Supervisory 6
	4	Node Missing	12	LCD80 Supervisory 7
	5	Node Extra	13	LCD80 Supervisory 8
	6	LCD80 Supervisory 1	14	LCD80 Supervisory 9
	7	LCD80 Supervisory 2	15	LCD80 Supervisory 10
460052	0	LCD80 Supervisory 11	8	Auxiliary Trouble 35
	1	Auxiliary Trouble 28	9	Auxiliary Trouble 36
	2	Auxiliary Trouble 29	10	Auxiliary Trouble 37
	3	Auxiliary Trouble 30	11	Auxiliary Trouble 38
	4	Auxiliary Trouble 31	12	Auxiliary Trouble 39
	5	Auxiliary Trouble 32	13	Auxiliary Trouble 40
	6	Auxiliary Trouble 33	14	Auxiliary Trouble 41
	7	Auxiliary Trouble 34	15	Auxiliary Trouble 42
460053	0	Auxiliary Trouble 43	8	LCD80 Supervisory 51
	1	LCD80 Supervisory 44	9	LCD80 Supervisory 52
	2	LCD80 Supervisory 45	10	LCD80 Supervisory 53
	3	LCD80 Supervisory 46	11	LCD80 Supervisory 54
	4	LCD80 Supervisory 47	12	LCD80 Supervisory 55
	5	LCD80 Supervisory 48	13	LCD80 Supervisory 56
	6	LCD80 Supervisory 49	14	LCD80 Supervisory 57
	7	LCD80 Supervisory 50	15	LCD80 Supervisory 58
460054	0	LCD80 Supervisory 59	8	Auxiliary Trouble 16
	1	Network Ground Fault	9	Auxiliary Trouble 17
	2	Drill	10	Auxiliary Trouble 18
	3	Communication Error/Transmission Fault	11	Auxiliary Trouble 19
	4	Auxiliary Trouble 12	12	Auxiliary Trouble 20
	5	Auxiliary Trouble 13	13	Auxiliary Trouble 21
	6	Auxiliary Trouble 14	14	Auxiliary Trouble 22
	7	Auxiliary Trouble 15	15	Auxiliary Trouble 23

Register	Bit No.	System Trouble Name	Bit No.	System Trouble Name
460055	0	Auxiliary Trouble 24	8	Speaker Circuit Short 5
	1	Auxiliary Trouble 25	9	Speaker Circuit Short 6
	2	Auxiliary Trouble 26	10	Speaker Circuit Short 7
	3	Auxiliary Trouble 27	11	Speaker Circuit Short 8
	4	Speaker Circuit Short 1	12	Speaker Circuit Open 1
	5	Speaker Circuit Short 2	13	Speaker Circuit Open 2
	6	Speaker Circuit Short 3	14	Speaker Circuit Open 3
	7	Speaker Circuit Short 4	15	Speaker Circuit Open 4
460056	0	Speaker Circuit Open 5	8	Auxiliary Trouble 60
	1	Speaker Circuit Open 6	9	Tornado Alert
	2	Speaker Circuit Open 7	10	SLC! Disconnect
	3	Speaker Circuit Open 8	11	SLC2 Disconnect
	4	Amplifier Failure 1	12	Battery LOW
	5	Amplifier Failure 2	13	STYLE 6 ON LOOP 1
	6	Amplifier Failure 3	14	STYLE 6 ON LOOP 2
	7	Amplifier Failure 4	15	STYLE 6 ON LOOP 4
460057	0	STYLE 6 ON LOOP 5	8	LOSS OF PART LOOP3
	1	STYLE 6 ON LOOP 6	9	LOSS OF PART LOOP4
	2	STYLE 6 ON LOOP 7	10	LOSS OF PART LOOP5
	3	STYLE 6 ON LOOP 8	11	LOSS OF PART LOOP6
	4	STYLE 6 ON LOOP 9	12	LOSS OF PART LOOP7
	5	STYLE 6 ON LOOP 10	13	LOSS OF PART LOOP8
	6	LOSS OF PART LOOP1	14	LOSS OF PART LOOP9
	7	LOSS OF PART LOOP2	15	LOSS OF PART LOOP10
460058	0	LOSS OF ENTIRE LOOP1	8	LOSS OF ENTIRE LOOP9
	1	LOSS OF ENTIRE LOOP2	9	LOSS OF ENTIRE LOOP10
	2	LOSS OF ENTIRE LOOP3	10	HOLD UP ZONE TROUBLE
	3	LOSS OF ENTIRE LOOP4	11	CPU POWER RESTART LOOP1
	4	LOSS OF ENTIRE LOOP5	12	CPU POWER RESTART LOOP2
	5	LOSS OF ENTIRE LOOP6	13	CPU POWER RESTART LOOP3
	6	LOSS OF ENTIRE LOOP7	14	CPU POWER RESTART LOOP4
	7	LOSS OF ENTIRE LOOP8	15	CPU POWER RESTART LOOP5

Register	Bit No.	System Trouble Name	Bit No.	System Trouble Name
460059	0	CPU POWER RESTART LOOP6	8	DEVICE ZERO PRESENT LOOP5
	1	CPU POWER RESTART LOOP7	9	DEVICE ZERO PRESENT LOOP6
	2	CPU POWER RESTART LOOP8	10	DEVICE ZERO PRESENT LOOP7
	3	CPU POWER RESTART LOOP9	11	DEVICE ZERO PRESENT LOOP8
	4	CPU POWER RESTART LOOP10	12	DEVICE ZERO PRESENT LOOP9
	5	DEVICE ZERO PRESENT LOOP2	13	DEVICE ZERO PRESENT LOOP10
	6	DEVICE ZERO PRESENT LOOP3	14	RS232 LINK FAULT
	7	DEVICE ZERO PRESENT LOOP4	15	BATTERY LOW VOLTAGE
460060	0	BATTERY FAILURE	8	CLOCK SET TO AFTER AD2099
	1	MAIN CPU WATCHDOG OPERATED	9	AUXILIARY TROUBLE
	2	CPU EPROM CHECKSUM ERROR	10	CONFIGURATION NEEDS EXPANSION
	3	SOFTWARE FAILURE	11	CONFIGURATION NEEDS RS485 CARD
	4	CPU/DISPLAY HARDWARE FAULT	12	EXTERNAL PSU FAULT
	5	SOUNDER CIRCUIT FAULT	13	EXTERNAL PSU LOW SYSTEM VOLTAGE
	6	OUTPUT DIRVER FAULT	14	NETWORK ZONE DUPLICATION
	7	GENERAL FAULT	15	NETWORK DOMAIN RING OR SUBNET LOST
460061	0	INCOMPATIBLE LOOP1 DEVICE AND LIB	8	INCOMPATIBLE LOOP9 DEVICE AND LIB
	1	INCOMPATIBLE LOOP2 DEVICE AND LIB	9	INCOMPATIBLE LOOP10 DEVICE AND LIB
	2	INCOMPATIBLE LOOP3 DEVICE AND LIB	10	ID2NET PARTIAL OPEN/SHORT CIRCUIT FAULT
	3	INCOMPATIBLE LOOP4 DEVICE AND LIB	11	ID2NET: PHASE REVERSAL FAULT
	4	INCOMPATIBLE LOOP5 DEVICE AND LIB	12	ID2NET: CHANNEL INVERSION FAULT
	5	INCOMPATIBLE LOOP6 DEVICE AND LIB	13	TOO MANY CLIP ADDRESSES
	6	INCOMPATIBLE LOOP7 DEVICE AND LIB	14	SENSOR AT ADDRESS OUT OF RANGE LOOP1
	7	INCOMPATIBLE LOOP8 DEVICE AND LIB	15	SENSOR AT ADDRESS OUT OF RANGE LOOP2

Register	Bit No.	System Trouble Name	Bit No.	System Trouble Name
460062	0	SENSOR AT ADDRESS OUT OF RANGE LOOP3	8	NEW AUXILIARY SUPPLY
	1	SENSOR AT ADDRESS OUT OF RANGE LOOP4	9	FAT/FBF MISSING FAULT
	2	SENSOR AT ADDRESS OUT OF RANGE LOOP5	10	ID2NET DUPLICATE NODE
	3	SENSOR AT ADDRESS OUT OF RANGE LOOP6	11	Reserved
	4	SENSOR AT ADDRESS OUT OF RANGE LOOP7	12	Reserved
	5	SENSOR AT ADDRESS OUT OF RANGE LOOP8	13	Reserved
	6	SENSOR AT ADDRESS OUT OF RANGE LOOP9	14	Reserved
	7	SENSOR AT ADDRESS OUT OF RANGE LOOP10	15	Reserved

Section 8: The BACnet Feature

The BACnet feature of the CLSS Gateway provides communications between a panel(s) network and a BACnet client, which is using the BACnet communication protocol.

The CLSS Gateway acts like any other node on a panel network. It can communicate with a single panel or network of panels directly or through a network control module.

NOTE: The BACnet communication protocol is an *American National Standard (ANSI/ASHRAE 135-2012)*.

The CLSS BACnet client will present the physical fire devices in the network as BACnet objects. The CLSS Gateway manages their object database. As events occur, the object properties are updated in real-time, and messages are sent to the appropriate BACnet report destination.

The BACnet clients may make requests to read properties of the BACnet objects. Those properties are the values of the device status and programming.

After a user subscribes for event notifications, the BACnet client receives events from each subscribed panel.

Large networks can use many CLSS Gateways. Each CLSS Gateway in a large network can support up to 16 panels with a combined maximum of 15, 000 objects.

The BACnet client workstation front-end must conform to *BACnet Standard Annex J* for IP and support objects mentioned in the "BACnet PIC Statement" on page 127.

NOTE: This manual is written with the understanding that its user is trained in BACnet operations and services. The information provided here is solely for the configuration of the Gateway to communicate event information to an existing BACnet network.

8.1 Agency Listings

8.1.1 Compliance

This product has been investigated to, and found to be in compliance with the following standards.

National Fire Protection Association

- NFPA 72—National Fire Alarm Code

Underwriters Laboratories

- UL-864—Control Units for Fire Alarm Systems, 10th Edition

Underwriters Laboratories Canada

- CAN/ULC-S527-19—Standard for Control Units for Fire Alarm Systems, Fourth Edition

8.2 Installation

This product is intended to be installed in accordance with the following regulatory agencies.

Local

- AHJ—Authority Having Jurisdiction
- National Fire Protection Association
- NFPA 70—National Electrical Code
- NFPA 72—National Fire Alarm Code
- NFPA 101—Life Safety Code

Canada

- CSA C22.1—Canadian Electrical Code, Part I, Safety Standard for Electrical Installations

WARNING: IMPROPER INSTALLATION, MAINTENANCE, AND LACK OF ROUTINE TESTING COULD RESULT IN SYSTEM MALFUNCTION.

8.3 Compatible Equipment

The CLSS Gateway is compatible with the following equipment:

Table 8.1: CLSS-Compatible Equipment List

Type	Equipment
Fire Panels	NOTIFIER Panels • NFS-320 • NFS-640 • NFS2-640 • NFS-3030 • NFS2-3030 • AFP2800 • AFP 3030 • N16 (INSPIRE) Honeywell Panels • XLS 120 • XLS 140-2 • XLS 2000 • XLS 3000 GENT Panels • COMPACT-24-N • COMPACT-PLUS • VIGPLUS-24 • VIGI-24 • VIGI-72
Network Cards	• NCM-W, NCM-F • HS-NCM-W, HS-NCM-SF, HS-NCM-MF, HS-NCM-WSF, HS-NCM-WMF, HS-NCM-MFSF • NFN-GW-PC-NHW-2, HS-NCM-WMF-2, HS-NCM-WSF-2, HS-NCM-W-2

Table 8.1: CLSS-Compatible Equipment List

Type	Equipment

Other Products	Unmonitored but network compatible.
	• DVC
	• NCA-2
	• NCD
	• NWS-3
	• Legacy Gateway
	• NFN-GW-PC-HNW-2
	• NFN-GW-EM-3
	• PC NFN Gateways:
	  • NFN-GW-PC-F
	  • NFN-GW-PC-W
	  • NFN-GW-PC-HNMF
	  • NFN-GW-PC-HNSF
	  • NFN-GW-PC-HNW
	• VESDA-HLI-GW

8.4 CLSS Gateway Parts

Part Number	Description
HON-CGW-MBB	CLSS Gateway with enclosure
CGW-MB	CLSS Gateway board
CGW-BB	CLSS Gateway enclosure
50160636-001	CLSS Gateway kit. It includes a 30” NUP cable and a NOTIFIER lock and key set.
32351718-001	10 ft NUP Serial (RS-232) cable kit

8.5 System Requirements

The CLSS Gateway can monitor up to 16 panels. All of these panels should have a combined maximum of 15,000 objects only. This includes all detectors, monitor modules, control modules, bell circuits, and so on.

Refer to the panel manual for details about wiring limitations.

Access the configuration web page from a computer in the same IP subnet as the CLSS Gateway with latest version of Google Chrome™. JAVA® version 6 or higher must also be installed and enabled.

8.6 Recommendations

Ensure the following to prevent troubles:

- The LED indicators on the CLSS Gateway board confirm normal operations of the gateway.
- The BACnet functionality is correctly configured and enabled in the CLSS Gateway.
- The IP addresses and subnet mask entered in the **Network Settings** of the **CLSS Gateway Configuration Tool** are correct.
- Correct IP address as well as net mask are specified in the Configuration Computer allowing it to connect with the CLSS Gateway in the building.
- When the CLSS Gateway and the BACnet client are in different network, the gateway as a foreign device is enabled; and, the IP address and port of the BBMD device* is correctly entered.

*BBMD = BACnet Broadcast Management Devices (BBMDs)

8.7 System Architecture

These are connections options for the CLSS Gateway architecture.

An Internet or Intranet IP network connection is used with both architectures.

8.7.1 IP Restrictions for the Gateway

- Assign a static IP address.

NOTE: DHCP is supported, but not recommended.
Before using DHCP with LAN for Intranet connection, consult the network administrator of the Site.

- Following are not supported:
  - Web access through an HTTP proxy server
  - Use of a NAT (Network Address Translation)

8.7.2 IP Requirements

IP Port Settings

The following IP ports must be available to the CLSS Gateway:

Ports Range	Type	Direction	Purpose
47808 to 47823	UDP	Input/Output	BACnet feature communications

8.7.3 Single Panel Architecture

Direct panel connection — a connection is made directly to a supported fire panel or annunciator. Refer to "Single Panel Connecting to BACnet via CLSS Gateway" on page 116 for connection topology details.

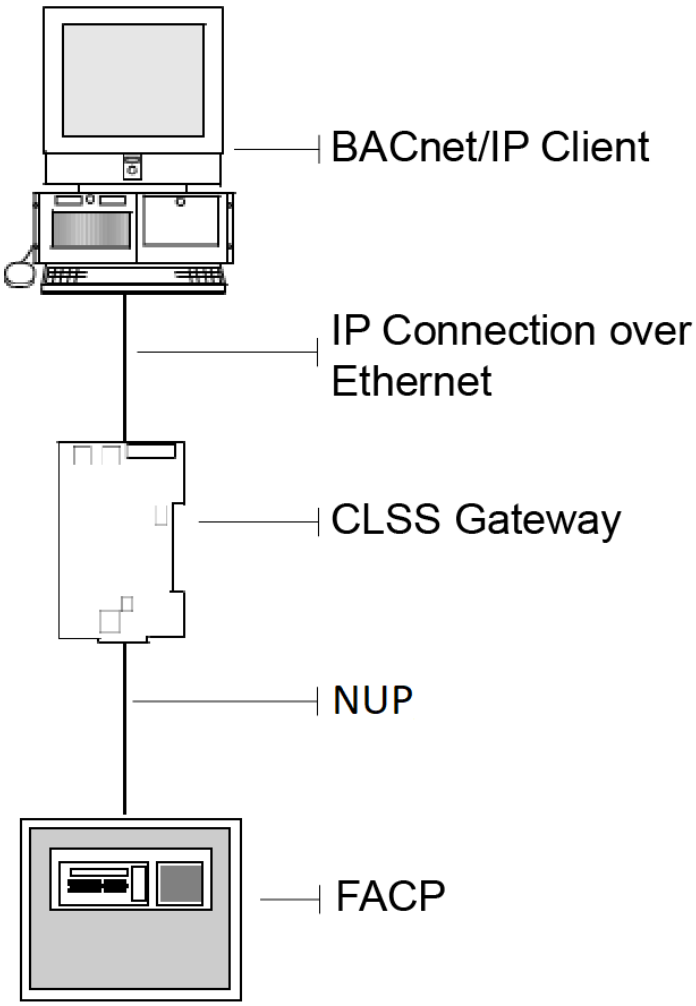

Figure 8.1: Single Panel Connecting to BACnet via CLSS Gateway

Refer to "Compatible Equipment" on page 113 for supported panels and annunciators.

8.7.4 Multi-panel Network Architecture

The CLSS Gateway can connect to a NUP, RS232, USB, or TTL port available on a panel and interact with that panel's network.

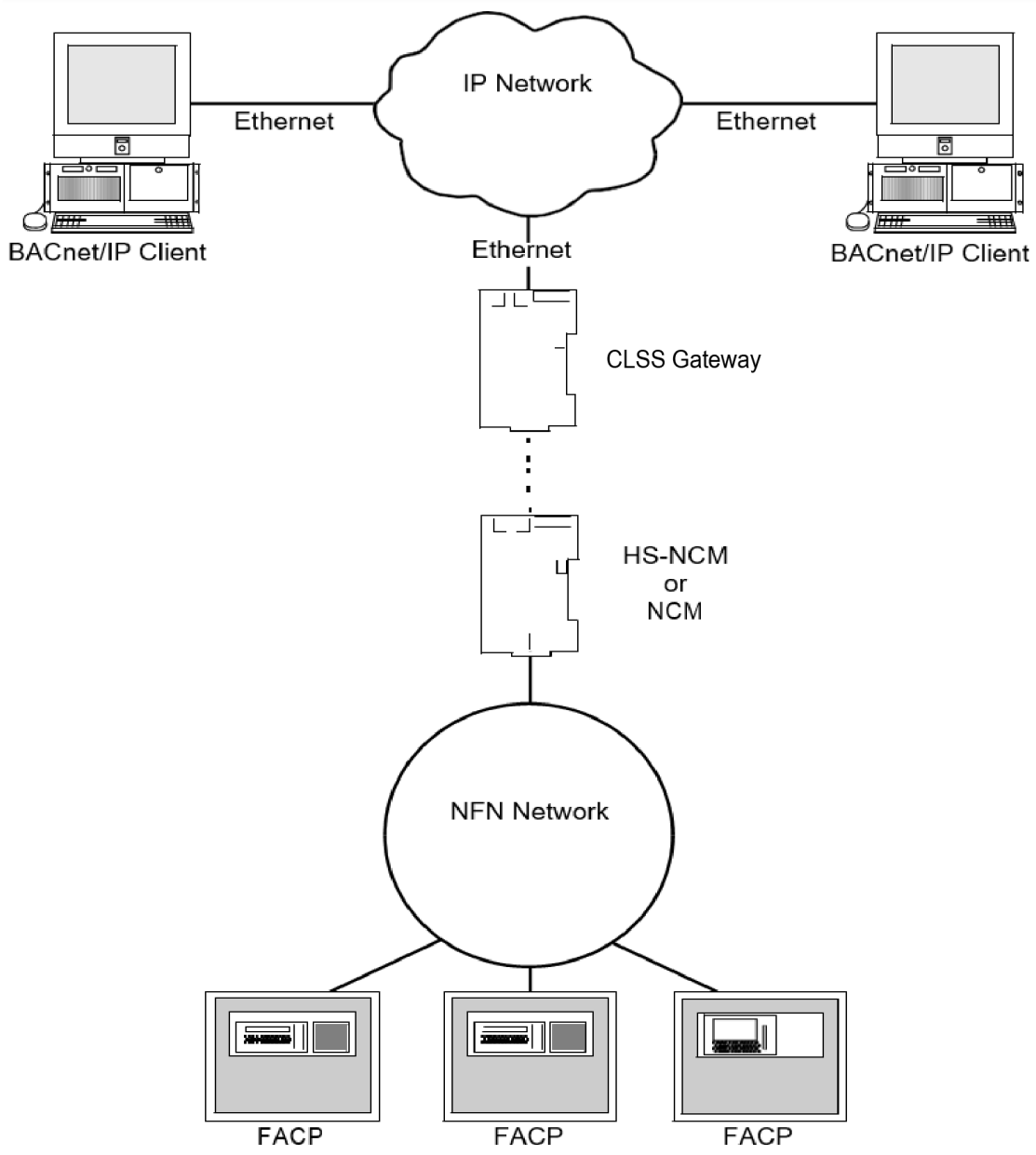

Figure 8.2: Gateway Connected with Multiple Panels

8.8 BACnet Feature Activation

Purchase the required number of BACnet features on *CLSS Site Manager* and then activate them in the CLSS App.

NOTE: Purchase should be within the number of tokens available.

8.8.1 To Purchase the BACnet Support

1. Log onto *CLSS Site Manager*.
2. Click on your account name and select **Manage Access**.

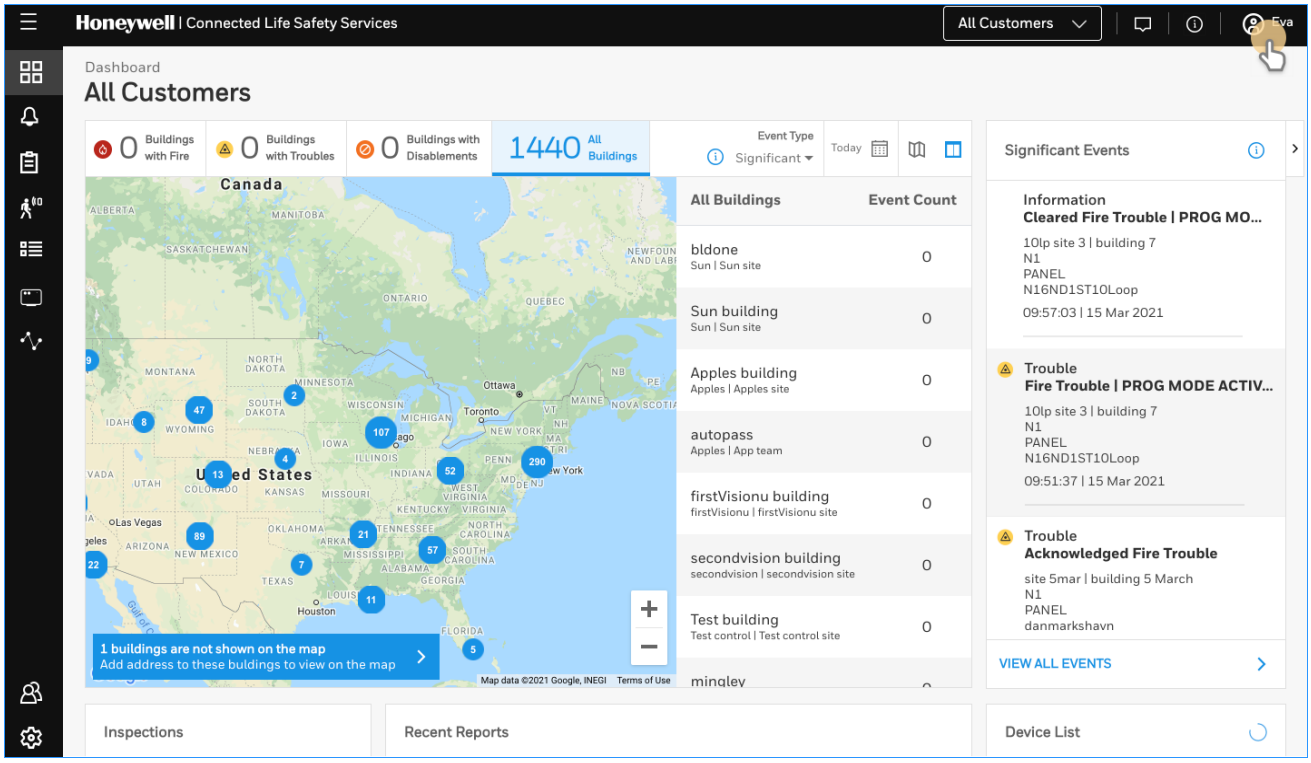

Figure 8.3: Selecting Manage Access

3. Click **Features** on the **Manage Access** page.
4. Click **Gateway** under the **Features** section.
5. Note down the purchased number under **Available Features**.
6. Click **PURCHASE** at the top right side.

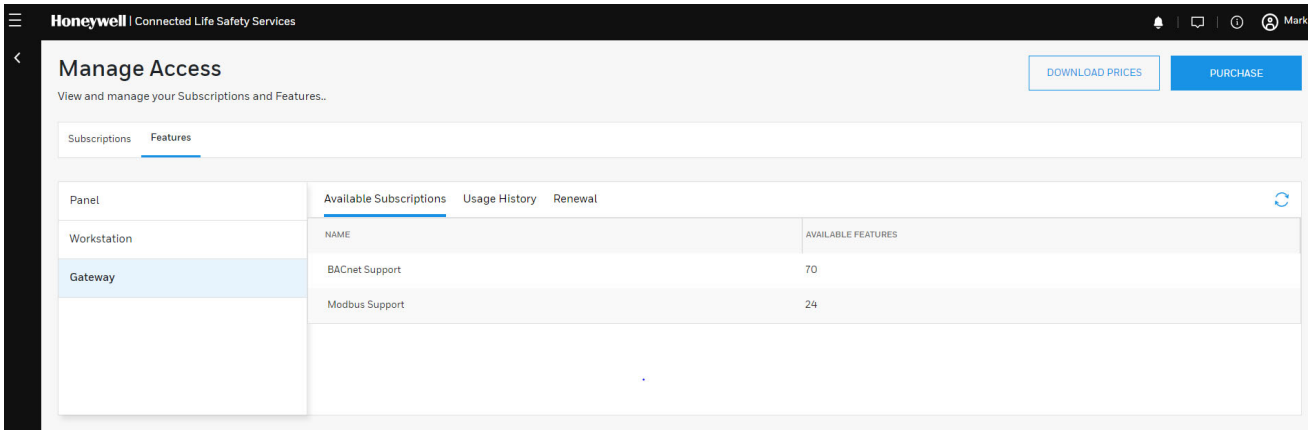

Figure 8.4: Purchasing the BACnet Support

7. Scroll down to find **BACnet Support** in the **Features** tab.
8. Enter the number of support required in the **BACnet Support** field.
9. Click **PURCHASE**.
10. Read the **Confirmation** message and if acceptable, click **CONFIRM**.
    Or
    Click **CANCEL** and repeat the steps from 8 to 10.
11. Wait for the purchase to complete and refresh the page, if required.
12. Verify that the purchased number under **Available Features** is correct.

8.8.2 To Activate the BACnet Support

NOTE:
- The gateway must be already installed. If not, install the fixed gateway.
- All the network settings should be configured while installing.

1. Tap **Perform Feature Activation** on the *CLSS* App's welcome message.

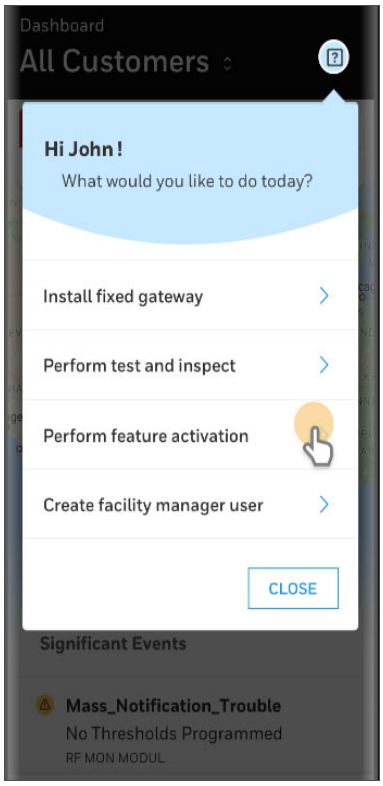

Figure 8.5: Feature Activation: The First Step

2. Tap **Fixed Gateways**.
3. Select the site of the gateway.
4. Find and tap the OC of the gateway.
5. Tap **ADD ACTIVATION**.
6. Tap **BACnet Support** under the **One Time Activations**.
7. Tap **ACTIVATE**.
8. Wait for the activation successful message.

8.9 Configuring the BACnet Network Settings

8.9.1 Installation and Configurations

The CLSS Gateway can communicate with the BACnet client in an Ethernet LAN.

8.9.2 The IP Settings

The following information applies to IP settings:

- You can use only the *Eth1* port for connections to BACnet clients. For more details, refer to 8.10.1 "To Configure the BACnet Settings".
- Each CLSS Gateway is shipped with a default node number of 235.
- The computer used to configure the CLSS Gateway must establish an IP connection to the gateway. Consult with a network administrator if unsure how to make this connection.
- Connecting more than one CLSS Gateway prior to reconfiguring the IP address will result in an IP address conflict.

8.10 To Connect with the BACnet Client

1. At the CLSS Gateway side, connect an Ethernet cable to the Ethernet Port 1.
2. Connect the other end of the Ethernet cable to the IP network.

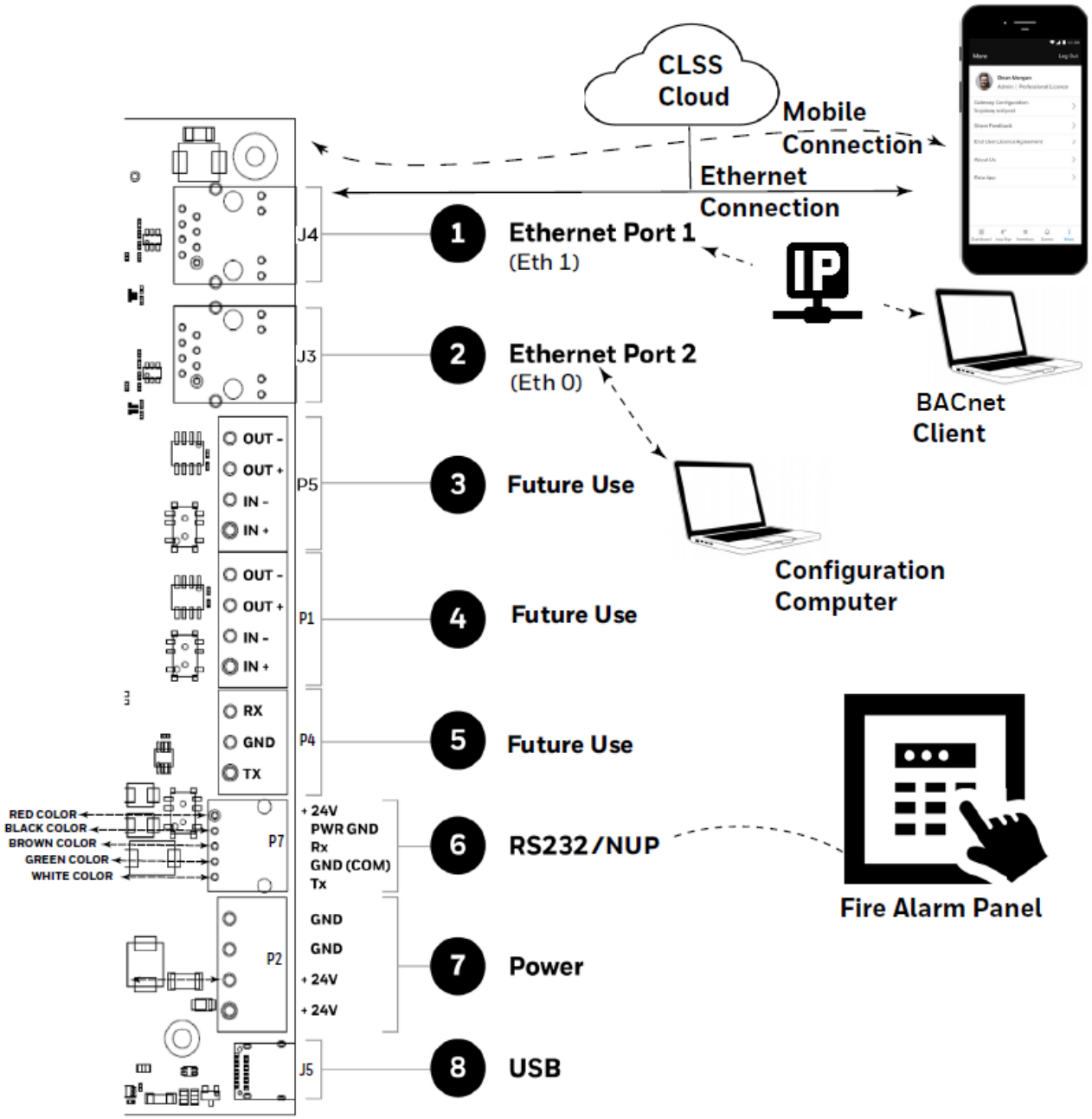

3. Connect the system running the BACnet client to the same IP network.

8.10.1 To Configure the BACnet Settings

Using the web-based *Gateway Configuration Tool*, configure the BACnet settings for the *CLSS Gateway* to use the BACnet application.

CAUTION: IF YOU ARE RECONFIGURING AN EXISTING SETUP, ANY NEW CHANGES TO THE PANEL'S DEVICE CONFIGURATION FILE, NODE ADDRESS, OR GATEWAY ID WILL REQUIRE MANUAL REMOVAL OF THE DATABASE. IT WILL AUTOMATICALLY RESTART THE BACNET APPLICATION.

Configure the BACnet settings as follows:

1. On the CLSS Gateway board, find the S6 button.
2. Press the S6 button for a minimum of 6 seconds and then release it. It will switch the gateway to configuration mode.
   The LED indicator DL3 turns ON and SOLID indicating that the configuration is enabled.
3. Connect the Ethernet cable to *Eth0* for enabling web configuration.

NOTE: The web configuration is available only on *Eth0*.

4. Open the Configuration Computer connected to the *Eth0* port of the gateway.

NOTE: The static IP of the *Eth0* port is *192.168.10.190*.

5. In the Chrome browser, enter the following URL:
   https://192.168.10.190:9443/config/index.html
6. Do the following if any security warning is shown. Otherwise, go to step 7.
   1. Click the *Advanced* link below the error message.
   2. Agree to proceed.
7. In the **Gateway Configuration Tool** page, enter the password.

NOTE: The default password is: Welcome123

8. Go to the **Network Settings** in the **Gateway Settings** section.
9. Provide the required gateway settings details:

Table 8.2: Gateway Settings Details

Field	Description
Select Panel	Select the brand of panel to which gateway is connected
Communication Port	Select the type of port gateway is connected to panel Auto: Automatically detects the port RS232: Select RS232 if gateway is connected via RS232 TTL: Select TTL if gateway is connected via TTL
Baud Rate	Select the Baud Rate to which panel is configured among 9600, 19200, 38400, 57600, 115200
Node Address	Enter the Node Address for gateway. For a Gent panel the address can be between 64 to 249. For a NOTIFIER panel the address can be between 1 to 240. The default node address is 235. Note: The node address should be different from the gateway in the same network.
Gateway ID	Enter the Gateway ID. It should be within 1 to 100. Important: It is applicable only for Gent panels. Note: It should be different from the node address in the same network.

Table 8.2: Gateway Settings Details

Upload file	Upload a file using which IFOM inventory will be generated. For different panel type, the file format will be different. Only for Gent panels, it is a *.dat file. Refer to5.3.3 "To Configure the Panel's Connection Settings" section to know how to generate a *.dat file)

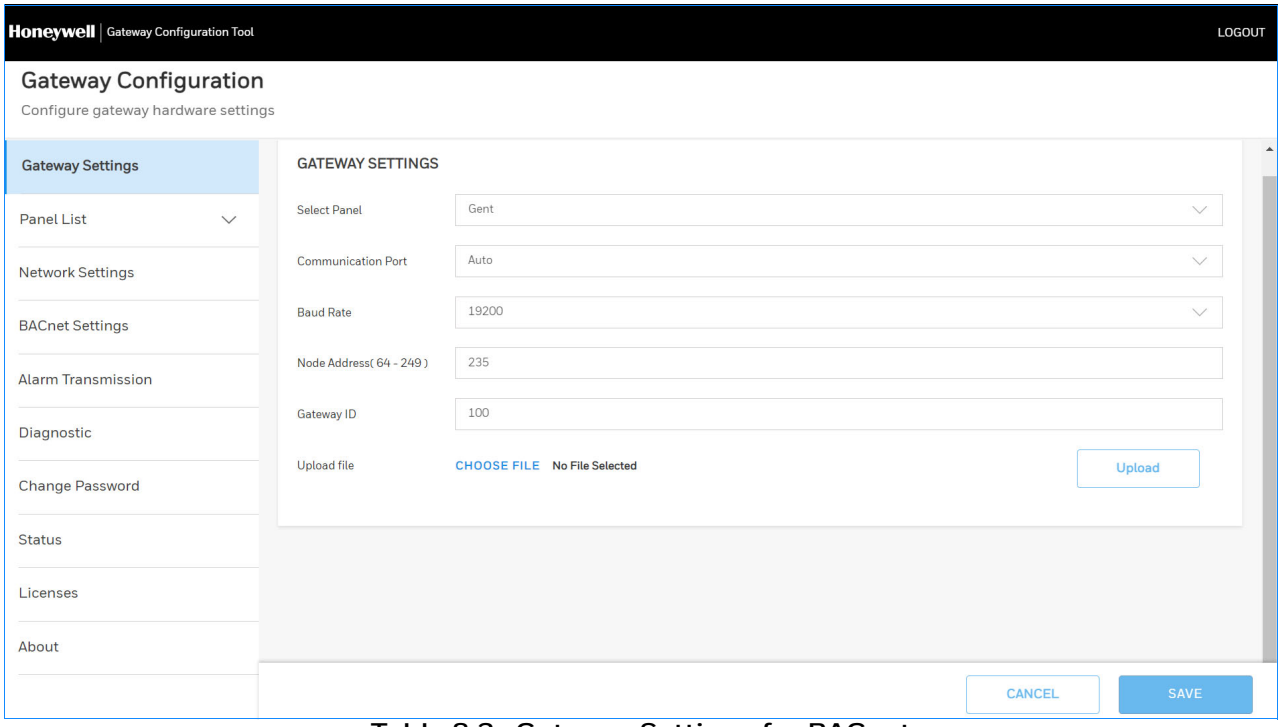

Table 8.3: Gateway Settings for BACnet

10. Assign the *Eth1* port with a static IP address for the BACnet connection.

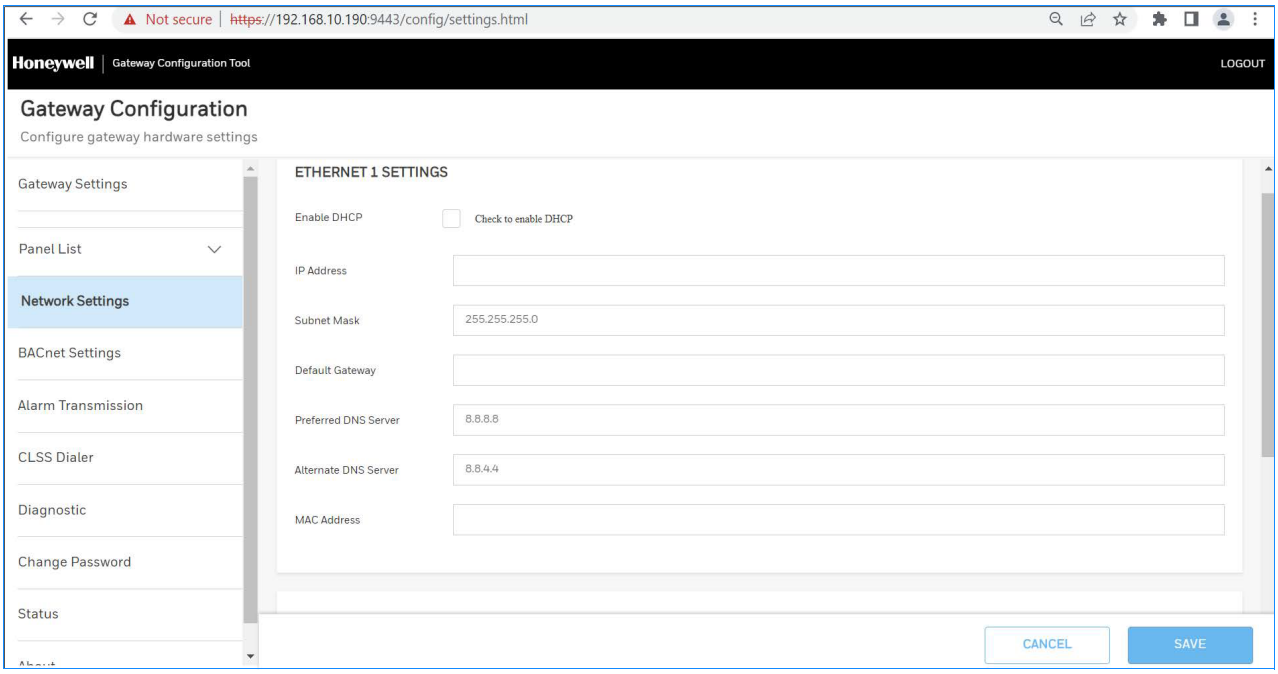

11. Connect the Ethernet cable between the *Eth1* port of CLSS gateway and its LAN device.

12. Find and click **BACnet Settings** in the **Gateway Settings** section as shown in Figure 8.6.

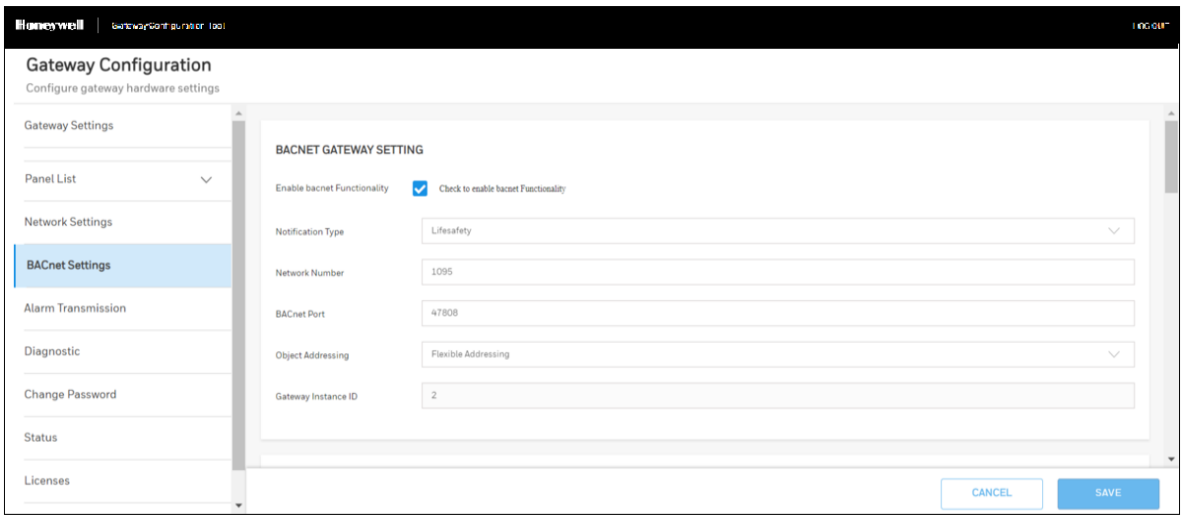

Figure 8.6: BACnet Gateway Settings Screen

13. Specify the required values as in the following table:

Table 8.4: Gateway Settings

Fields	Action
Enable BACnet functionality	Select to enable the BACnet application.
Notification Type	Select Life Safety or Multi-state suitable to the customer requirement.
Network Number	Specify a network number of this BACnet gateway. It helps to identify the gateway when multiple gateways are in the network. Note: Sometimes two or more gateways in the same network might use the BACnet feature. Each of them should have its own unique network number. Ensure that the difference between any two network numbers is at least 100.
BACnet Port	Specify the BACnet port. The universal default port number is 47808. Its range can be: 47808 - 47823 (0xBAC0 - 0xBACF)
Object Addressing	Select the addressing type. Options: Standard Addressing or Flexible Addressing. Note: Flexible addressing is available only for Gent panels. Standard addressing is available for NOTIFIER panels.
Gateway Instance ID	This is a read only property. It shows the instance number of Gateway on the client. The instance number is calculated using the Gateway ID value given in the Gateway settings.

Table 8.4: Gateway Settings *(Continued)*

Fields	Action
FOREIGN DEVICE CONFIGURATION (Optional)	
Foreign Device	Select to enable the foreign device.
IP Address	Enter the BBMD Server IP address.
Port	Enter the BBMD Port number.
Register Time	Specify the time in seconds. As per this value, the device will periodically re-register with the BBMD to maintain full participation in the BACnet/IP network. Note: Maximum value is 30 seconds.
NODE MAPPING	
Automatic Mapping	Select Yes to view the first 16 nodes identified in the network. Select No to disable automatic mapping. Note: A reboot is needed, if the value is changed.
Show all nodes(Yes/No)	Select Yes to view both online as well as offline nodes. Select No to view only the online and monitored nodes.
Monitoring(Yes/No)	Select Yes from the *Monitoring* column in the table. The client will show the selected nodes. Select No from the *Monitoring* column in the table to disable the monitoring.
BACK UP AND RESTORE	
Configuration Backup	Click to download a configuration settings as a backup file.
CHOOSE FILE	Click and select an already downloaded backup file.
Upload BACnet backup file	Click to upload and apply the configuration settings of the backup file. Note: Before uploading, ensure that the file name is: *BacnetBackup.tar.gz*
TOOLS AND GATEWAY ACTIVITY	
Delete Object Database	Click to delete the BACnet database in the gateway.
EVENT PRIORITIES **(Only for GENT Panels. Changing Event Priorities is Not Recommended.)**	
Reliable Fire Alarm	Set Priority between range 0-31.
Panic Alarm	Set Priority between range 0-31.
LifeSafety PreAlarm	Set Priority between range 0-31.
General Alarm	Set Priority between range 0-31.
Life Safety Return To Normal	Set Priority between range 0-31.
Property Process Alarm	Set Priority between range 32-63.
Property Return to Safety Alarm	Set Priority between range 32-63.
Fire Supervision	Set Priority between range 64-95.
General Supervision	Set Priority between range 64-95.
Early Warning Alert	Set Priority between range 64-95.

Table 8.4: Gateway Settings *(Continued)*

Fields	Action
Supervisory Return To Normal	Set Priority between range 64-95.
Process Trouble	Set Priority between range 96-127.
Fire Trouble	Set Priority between range 96-127.
Trouble return to normal	Set Priority between range 96-127.
Equipment Supervision and Monitoring	Set Priority between range 128-191.
System Status Active	Set Priority between range 192-255.
Set to default	Click to set the priorities to default.

14. Click **SAVE**.
15. Do the following if you reconfigured panel's device configuration file, node address, or gateway ID:
    a. Find and click **BACnet Settings** in the **Gateway Settings** section.
    b. Go to the **TOOLS** section and click **Delete** to delete the database.
16. Wait for the BACnet application restart to complete.

8.11 Replacing the BACNET-GW

The CLSS Gateway and the Legacy Gateway have different object addressing schemes. Refer to the Compatible Equipment section for the supported objects details.

Ensure that the replacing CLSS Gateway has correct object addresses and the old object mappings of Legacy Gateway are removed.

Refer to the BACnet PIC Statement section for the CLSS Gateway object addressing details.

1. Ensure that the BACnet feature in the CLSS Gateway is licensed.
2. Go to CLSS Gateway Web Configuration Tool.
3. Click the **BACnet Settings** tab.
4. Ensure that the below BACnet settings are same in the CLSS Gateway:
   - Static IP address
   - BACnet Port Number
   - Foreign device configurations
   - Node mapping
   - Network Number
5. Delete the replaced BACnet gateway related objects on the BACnet client.
6. Connect the CLSS Gateway.
7. Rediscover the BACnet objects.
   Or
   Restart the BACnet client.
8. Modify the client graphics according to the rediscovered objects.

8.12 Using Both the CLSS Gateway and the Legacy BACnet Gateway

The CLSS Gateway and the Legacy Gateway have different addressing schemes. Ensure that they are assigned with their own addressing scheme.

Refer to the BACnet PIC Statement section for the CLSS Gateway object addressing details.

1. Ensure that the BACnet feature in the CLSS Gateway is licensed.
2. Go to CLSS Gateway Web Configuration Tool.

3. Click the **BACnet Settings** tab.
4. Configure the BACnet settings in the new CLSS Gateway.

   Refer to the To Configure the BACnet Settings section for the configuring procedure.
5. Connect the CLSS Gateway and rediscover the BACnet objects.
6. Modify the client graphics according to the new instance numbers (object addresses).

For the *CLSS Gateway* object addressing details, refer to the BACnet PIC Statement. section.

CAUTION: THE NODE NUMBER OF THE CLSS GATEWAY SHOULD BE DIFFERENT FROM OTHER GATEWAYS IN THE NETWORK.

CAUTION: THE IP ADDRESS OF THE CLSS GATEWAY SHOULD BE DIFFERENT FROM OTHER GATEWAYS AND DEVICES IN THE NETWORK.

8.13 BACnet PIC Statement

8.13.1 Protocol Implementation Conformance Statement (Normative)

BACnet Protocol Revision: 14

■ Product Description

This product presents Fire Panel and Annunciator nodes (operating as part of a Fire Panel network or stand-alone) and their associated objects as BACnet objects. Event notification for Alarms, Troubles, and other states are sent to registered BACnet client workstations.

It also support the following control functionalities of the Gent panels:

Silence/Unsilence, Reset and Mute panels, Enable/Disable loop devices, Zones, Sectors and Command builds, and Activate/De-activate Command builds.

This product presents VESDA-Air is an indoor air quality (IAQ) measurement system piggybacking on VESDA-E smoke detection systems and their associated objects as BACnet objects. Event notification for Faults (stax/cartridge faults) and other states are sent to registered BACnet client workstations.

■ BACnet Standardized Device Profile (Annex L):

☐ BACnet Operator Workstation (B-OWS)

☐ BACnet Building Controller (B-BC)

☑ BACnet Advanced Application Controller (B-AAC)

☐ BACnet Application Specific Controller (B-ASC)

☐ BACnet Smart Sensor (B-SS)

☐ BACnet Smart Actuator (B-SA)

■ **BACnet Interoperability Building Blocks Supported (Annex K)**

Data Sharing	Device & Network Management	Scheduling	Alarm & Event Management	Trending
DS-RP-B	DM-DDB-B		AE-ACK-B	
DS-RPM-B	DM-DOB-A			
	DM-DOB-B		AE-ASUM-B	
	DM-LM-B			
DS-WP-B	DM-LM-B		AE-N-I-B	
DS-WPM-B	(DM-RD-B)*		AE-INFO-B	
			AE-LS-B*	

NOTE: DM-RD-B and AE-LS-B are supported for the Gent panels only.

■ **Segmentation Capability**

☑ Segmented requests supported, Window Size 1024 Max

☑ Segmented responses supported, Window Size 1024 Max

■ **Standard Object Types Supported - Life Safety Point/Life Safety Zone**

	BACnet Enumeration	BACnet LifeSafetyState	Fire Panel State
Present Value	0	IssQuiet	Normal
	1	IssPreAlarm	PreAlarm
	2	IssAlarm	Fire Alarm, Security Alarm (Life/Property), Critical Process Alarm, (Life/Property), Medical Emergency, IB Smash Glass, Panic Alarm
	3	IssFault	Security Trouble, Fire Trouble, Non-Fire Trouble, Fire Device or Zone, Disabled, Non-Fire Device Disabled
	7	IssActive	Non-Fire Activation
	22	IssSupervisory	Supervisory (Equipment), Supervisory (Guard's Tour)

	BACnet Enumeration	**BACnet LifeSafetyState**	**Fire Panel State**
Tracking Value	0	IssQuiet	Normal
	1	IssPreAlarm	PreAlarm
	2	IssAlarm	Fire Alarm, Security Alarm (Life/Property), Critical Process Alarm (Life/Property), Medical Emergency, IB Smash Glass, Panic Alarm
	3	IssFault	Security Trouble, Fire Trouble, Non-Fire Trouble, Fire Device or Zone, Disabled, Non-Fire Device Disabled
	7	IssActive	Non-Fire Activation
	22	IssSupervisory	Supervisory (Equipment), Supervisory (Guard's Tour)
Event State	**BACnet Enumeration**	**BACnet Event State**	**Fire Panel State**
	0	EsNormal	Normal
	1	EsFault	Security Trouble, Fire Trouble, Non-Fire Trouble, Fire Device Disabled, Non-Fire Device Disabled
	2	EsOffNormal	All statuses other than normal and fault.
Reliability	**BACnet Enumeration**	**BACnet Reliability**	**Fire Panel State**
	0	reNoFaultDetected	All statuses other than trouble.
	7	re_UnreliableOther	Security Trouble, Fire Trouble, Non-Fire Trouble
Mode	**BACnet Enumeration**	**BACnet Mode**	**Fire Panel State**
	0	IsmOff	Power-Up State
	11	IsmEnabled	Set if point has been disabled and subsequently enabled since startup.
	12	IsmDisabled	Fire Device or Zone Disabled, Non-Fire Device Disabled

	BACnet Enumeration		**Fire Panel State**
Silence State	0	ssUnsilenced	Audibles Unsilenced
	1	ssAudiblesSilenced	Audibles Silenced
Operation Expected	0		NA

Maintenance Expected	NA	NA	NA
	BACnet Event Transition Bit		**Fire Panel State**
Event Enable		toOffNormal	
		toFault	
		toNormal	
Direct Reading	REAL	NA	% Alarm
Proprietary Property 1001	REAL	NA	Drift Compensation Percent (ONYX Series Panels Only)
Status Flags	**Boolean**	**BACnet Status Flags**	**Fire Panel State**
	0,0,0,0	Normal	Normal
	1,0,0,0	InAlarm	Fire Alarm, Security Alarm (Life/Property), Critical Process Alarm (Life/Property), Medical Emergency, PreAlarm, IB Smash Glass, Panic Alarm
	0,1,0,0	Fault	Security Trouble, Fire Trouble, Non-Fire Trouble
	0,0,0,1	OutOfService	Fire Device or Zone Disabled, Non-Fire Device Disabled
	1,0,0,1	InAlarm, OutOfService	If device is in Alarm state (Fire Alarm, Security Alarm (Life/Property), Critical Process Alarm (Life/Property), Medical Emergency, PreAlarm, IB Smash Glass, Panic Alarm) and also device goes to disable state (Fire Device or Zone Disabled, Non-Fire Device Disabled)
	0,1,0,1	Fault, OutOfService	If device is in trouble state (Security Trouble, Fire Trouble, Non-Fire Trouble)and also device goes to disable state (Fire Device or Zone Disabled, Non-Fire Device Disabled)
Out of Service	**Boolean**		**Fire Panel State**
	0	FALSE	All statuses other than disable
	1	TRUE	Fire Device or Zone Disabled, Non-Fire Device Disabled

■ **Standard Object Types Supported - Multi-State Input /Multi-State Output / Multi-State Value**

	BACnet Enumeration		**Fire Panel State**
Present Value	1	None	Normal
	2	None	All statuses other than those included in 3 and 4 below.
	3	None	Security Trouble, Fire Trouble, Non-Fire Trouble
	4	None	Fire Device or Zone Disabled, Non-Fire Device Disabled
Event State	**BACnet Enumeration**	**BACnet Event State**	**Fire Panel State**
	0	EsNormal	Normal
	1	EsFault	Security Trouble, Fire Trouble, Non-Fire Trouble, Fire Device Disabled, Non-Fire Device Disabled
	2	EsOffNormal	All statuses other than normal and fault.
Reliability	**BACnet Enumeration**	**BACnet Reliability**	**Fire Panel State**
	0	reNoFaultDetected	All statuses other than trouble.
	7	re_UnreliableOther	Security Trouble, Fire Trouble, Non-Fire Trouble

	Boolean	**BACnet Status Flags**	**Fire Panel State**
Status Flags	0,0,0,0	Normal	Normal
	1,0,0,0	InAlarm	Fire Alarm, Security Alarm (Life/Property), Critical Process Alarm (Life/Property), Medical Emergency, PreAlarm, IB Smash Glass, Panic Alarm
	0,1,0,0	Fault	Security Trouble, Fire Trouble, Non-Fire Trouble
	0,0,0,1	OutOfService	Fire Device or Zone Disabled, Non-Fire Device Disabled
	1,0,0,1	InAlarm, OutOfService	If device is in Alarm state (Fire Alarm, Security Alarm (Life/Property), Critical Process Alarm (Life/Property), Medical Emergency, PreAlarm, IB Smash Glass, Panic Alarm) and also device goes to disable state (Fire Device or Zone Disabled, Non-Fire Device Disabled)
	0,1,0,1	Fault, OutOfService	If device is in trouble state (Security Trouble, Fire Trouble, Non-Fire Trouble)and also device goes to disable state (Fire Device or Zone Disabled, Non-Fire Device Disabled)
Out of Service	**Boolean**		**Fire Panel State**
	0	FALSE	All statuses other than disable
	1	TRUE	Fire Device or Zone Disabled, Non-Fire Device Disabled

■ ***Supported - Binary Output***

	BACnet Enumeration	BACnet LifeSafetyState	Fire Panel State
Present Value	0	bpv_InActive	Non-Fire Trouble, Non-Fire Device Disabled, Normal
	1	Bpv_Active	Non-Fire Activation
Event State	**BACnet Enumeration**	**BACnet Event State**	**Fire Panel State**
	0	EsNormal	Normal
	1	EsFault	Non-Fire Trouble, Non-Fire Device Disabled
	2	EsOffNormal	Non-Fire Activation
Reliability	**BACnet Enumeration**	**BACnet Reliability**	**Fire Panel State**
	0	reNoFaultDetected	Non-Fire Activation, Non-Fire Device Disabled, Normal
	7	re_UnreliableOther	Non-Fire Trouble

	Boolean	BACnet Status Flags	Fire Panel State
Status Flags	0,0,0,0	Normal	Normal
	1,0,0,0	InAlarm	Non-Fire Activation
	0,1,0,0	Fault	Non-Fire Trouble
	0,0,0,1	OutOfService	Non-Fire Device Disabled
	1,0,0,1	InAlarm, OutOfService	If device is in Alarm state (Non-Fire Activation) and also device goes to disable state (Non-Fire Device Disabled)
	0,1,0,1	Fault, OutOfService	If device is in trouble state (Non-Fire Trouble) and also device goes to disable state (Non-Fire Device Disabled)
Out of Service	**Boolean**		**Fire Panel State**
	0	FALSE	All statuses other than disable
	1	TRUE	Non-Fire Device Disabled

■ **Supported - Binary Value Object**

Present Value	**BACnet Enumeration**		**Fire Panel State**
	0	bpv_InActive	Trouble, Device Disabled, Normal
	1	Bpv_Active	Activation
Event State	**BACnet Enumeration**	**BACnet Event State**	**Fire Panel State**
	0	EsNormal	Normal
	1	EsFault	Trouble, Device Disabled
	2	EsOffNormal	Activation
Reliability	**BACnet Enumeration**	**BACnet Reliability**	**Fire Panel State**
	0	reNoFaultDetected	Activation, Device Disabled, Normal
	7	re_UnreliableOther	Trouble
Status Flags	**Boolean**	**BACnet Status Flags**	**Fire Panel State**
	0,0,0,0	Normal	Normal
	1,0,0,0	InAlarm	Activation
	0,1,0,0	Fault	Trouble
	0,0,0,1	OutOfService	Device Disabled
	1,0,0,1	InAlarm, OutOfService	If device is in Alarm state (Activation) and also device goes to disable state (Device Disabled)
	0,1,0,1	Fault, OutOfService	If device is in trouble state (Trouble) and also device goes to disable state (Device Disabled)
Out of Service	**Boolean**		**Fire Panel State**
	0	FALSE	All statuses other than disable
	1	TRUE	Device Disabled

■ **Supported – Group Object**

This Object type is only supported for Interface devices. Interface devices consist of multiple channels (Maximum 12 channels). Interface device comes under Group object and channels are created as MSI/MSO object.

List Of Group Members	**Fire Panel State**
	This property holds the interface device channel objects (MSI/MSO)
Present Value	**Fire Panel State**
	This property holds the interface device channel objects (MSI/MSO) present values. It is an array.

■ **Standard Object Types Supported - Notification Class**

Write Property/Add List element required for Intrinsic Reporting.

Data Link Layer Options:

☑ BACnet IP, (Annex J)

☑ BACnet IP, (Annex J), Foreign Device ISO 8802-3, Ethernet (Clause 7)

☐ ANSI/ATA 878.1, 2.5 Mb. ARCNET (Clause 8)

☐ ANSI/ATA 878.1, RS-485 ARCNET (Clause 8), baud rate(s)

☐ MS/TP MASTER (Clause 9), baud rate(s)

☐ MS/TP SLAVE (Clause 9), baud rate(s)

☐ Point-To-Point, EIA 232 (Clause 10), baud rate(s)

☐ Point-To-Point, modem, (Clause 10), baud rate(s)

☐ LonTalk, (Clause 11), medium

☐ Other

■ **B.10.1 Device Address Binding**

Is static device binding supported?

(This is currently necessary for two-way communication with MS/TP slaves and certain other devices.)

☑ Yes

☐ No

■ **B.10.2 Networking Options**

☐ Router, Clause 6 - List all routing configurations, e.g., ARCNET-Ethernet, Ethernet-MS/TP, etc. BACnet to Proprietary ARCnet Fire Network

☐ Annex H, BACnet Tunneling Router over IP BACnet Broadcast Management Device (BBMD)

Does the BBMD support registrations by Foreign Devices?

☐ Yes ☑ No

■ **B.10.3 Character Sets Supported**

Indicating support for multiple character sets does not imply that they can all be supported simultaneously.

☑ ANSI X3.4

☐ IBM/Microsoft DBCS

☐ ISO 8859-1

☐ ISO 10646 (UCS-2)

☐ ISO 10646 (ICS-4)

☐ JIS C 6226

■ B.10.4 Supported Non-BACnet Equipment/Networks

This product supports communications between NOTIFIER®/GENT® Fire Panels and Annunciator nodes compatible with network v 5.0 and later operating in a network or stand-alone configuration.

This product supports communications between VESDA Detectors and other nodes compatible with VESDAnet.

Equations for Object IDs (Instance Numbers)

■ Standard Addressing – Device Object Instance Number (Default):

NOTE: NOTIFIER panels use this addressing method.

In the CLSS BACNET-GW, each node has 15,000 object IDs available to it. For each node, multiply its node number by 15,000 and add the offset calculated below based on what type of point it is. These numbers define the 22 bits of the BACnet Object Identifier field.

Examples:

Node 15, L01D025 -> (15 x 15000) + ((1 - 1) x 1000) + (25 - 1) = 225024

Node 201, L02M014 -> (201 x 15000) + ((2 - 1) x 1000) + (14 + 299) = 3016213

Node 114, Annunciator 001 -> (114 x 15000) + (1 + 699) = 1711699

Node 20, ZONE0002 -> (20 x 15000) + (2 + 10000) = 310002

■ Flexible Addressing – Device Object Instance Number:

This is used by GENT panels. It is a default option for GENT panels.

For each node, use following formula to get base address **Gateway ID + X + 1 .** Here X Initial value is zero and will get incremented for each panel. Add the offset calculated below based on what type of point it is. These numbers define the 22 bits of the BACnet Object Identifier field.

Note: Gateway ID is user configurable. Gateway ID + X + 1 should be in the range 0 to 4194303. If there are multiple gateways make sure that one gateway range (Gateway ID + X + 1) is not conflicting with other.

Examples:

GatewayID 1,Node 15 (First Panel Discovered), L01D025 ,
1+1+ 1+ ((1 - 1) x 1000) + (25 - 1) = 27

GatewayID 1, Node 201 (Second panel discovered), L03M014,
1+2+1+((3 - 1) x 1000) + (14 + 299) = 2317

Below point offset equations related to points or devices under a panel is common for standard addressing and flexible addressing.

Detectors = ((Loop - 1) x 1000) + (Detector Address - 1)

Modules = ((Loop - 1) x 1000) + (Module Address + 299) + Panel#

SECTOR (Multi State Output)

(((Loop - 1) * 50) + Sector Address + 16000)

Interface Device (Group Object)

Detectors = ((Loop - 1) x 1000) + (Detector Address - 1)

Modules = ((Loop - 1) x 1000) + (Module Address + 299) + Panel#

Example:

L01D200 = ((Loop - 1) x 1000) + (Detector Address - 1) = 0 + 199 = G0199

IO channels (Multi State Input or Multi State Output)
((Loop - 1) x 3000) + 18000 + ((#Point_Address - 1) * 12) + #CHANNEL_ADDR (1 to 12)
Example:
L01D200 Channel 1, -> ((1-1) x 3000) + 18000 + ((200 - 1) * 12) + 1 = MSO20389
L01D200 Channel 2, -> ((1-1) x 3000) + 18000 + ((200 - 1) * 12) + 2 = MSO20390
L01D200 Channel 12, -> ((1-1) x 3000) + 18000 + ((200 - 1) * 12) + 12 = MSI20400

Panel Circuits (BINARY_OUTPUT)
(Panel# x 10) + (circuit# - 1) + 650

Bell Circuits or NAC Circuits (BINARY_OUTPUT)
(BELL_CIRCUIT# + 790)

Zones (MULTI_STATE_INPUT or LIFE_SAFETY_ZONE)
ZONE (1-2000) => (ZONE# + 10000)
Logic Zones (MULTI_STATE_INPUT or LIFE_SAFETY_ZONE)
LZONE (1-2000) => (LZONE# + 12000)
Special Zones (MULTI_STATE_INPUT or LIFE_SAFETY_ZONE)
FZONE (0-47) => (FZONE# + 14000)
Trouble Zones (MULTI_STATE_INPUT or LIFE_SAFETY_ZONE)
TZONE (1-99) => (TZONE# +14100)
Releasing Zones (MULTI_STATE_INPUT or LIFE_SAFETY_ZONE)
RZONE (0-9) => (RZONE# + 14050)
Command Build(BINARY_VALUE)
#COMMAND_BUILD_NUM + 15000
DAA Speaker Circuit
(DAA# - 1) x 4 + (Spk# - 1) + 2600

AFP 2800 Specific
// AZF 1 and 2
(AZF# + 3600)

// R00M003I 1-4
(R00M003I# + 3602)

// Relays 1 through 8
(Relay# + 3606)

// XR Relays 1-64
(XR Relay# + 3620)

System Troubles or Generic Panel Points
(System Trouble# + 14200)

800 addresses are dedicated to system troubles or generic panel points. Bucketized the troubles as mentioned below.

■ **Generic Panel Points**

System Trouble Object	Count	Address	Point Type
PMB 1-5	5	1-5	MSI/LSP
AIO 1-12	12	6-17	MSI/LSP
PANEL	1	18	MSI/LSP
RESET	1	19	MSI/LSP
NETWORK_A	1	20	MSI/LSP
NETWORK_B	1	21	MSI/LSP
CPU	1	22	MSI/LSP
GROUND	1	23	MSI/LSP
BATTERY	1	24	MSI/LSP
ACPOWER	1	25	MSI/LSP
WALKTEST	1	26	MSI/LSP
LOOP 1-10	10	27-36	MSI/LSP
ANNUN 1-32	32	37-68	MSI/LSP
DBUS 1-4	4	69-72	MSI/LSP
PRIMARY AMP 1-4	4	73-76	MSI/LSP
BACKUP AMP 1-4	4	77-80	MSI/LSP
BACKUP AMP	1	81	MSI/LSP
DAL	1	82	MSI/LSP
POTS	1	83	MSI/LSP
POTS1	1	84	MSI/LSP
POTS2	1	85	MSI/LSP
CELLULAR	1	86	MSI/LSP
ETH1	1	87	MSI/LSP
ETH2	1	88	MSI/LSP
ETH-WIFI	1	89	MSI/LSP
CLSS CLOUD	1	90	MSI/LSP
ZONE LICENSE	1	91	MSI/LSP
NETWORK DISPLAY LICENSE	1	92	MSI/LSP
LICENSE	1	93	MSI/LSP
AUDIO LIBRARY	1	94	MSI/LSP
DATABASE	1	95	MSI/LSP
VOICE	1	96	MSI/LSP
LIMIT EXCEED	1	97	MSI/LSP
MIC	1	98	MSI/LSP
PHONE	1	99	MSI/LSP
AMPLIFLIER	1	100	MSI/LSP
FFT	1	101	MSI/LSP

HISTORY	1	102	MSI/LSP
CHARGER	1	103	MSI/LSP
MASTER ALARM 1	1	104	MSV
MASTER ALARM 2	1	105	MSV
PSU	1	106	MSI/LSP
AUXILIARY RELAY 1	1	107	MSV
AUXILIARY RELAY 2	1	108	MSV
MONITORED INPUT	1	109	MSI/LSP

■ **Input, Output, and ZoneNotify (NOTIFICATION_CLASS)**

These objects will always be the same object ID on each device. You do not need to add the Node Number offset.

INPUTNOTIFY = 1

OUTPUTNOTIFY = 2

ZONENOTIFY = 3

Appendix A: Gateway Operating Conditions

Table A.1: Operational Requirements

Power Requirements	
Working voltage range	18V - 30V DC
Current	For HON-CGW-DACT: 180mA (maximum) For HON-CGW-MBB: 140mA (maximum) **NOTE**: The power requirement varies with the number of interfaces used.
Location Requirements	
Room Temperature	15 - 27° C (60 - 80° F)
Operational Temperature	0°C - 49°C (32°F - 120°F)
Relative humidity	93% ± 2% RH (Non-condensing) at 32°C ± 2°C (90° F ± 3°F)

CAUTION:EXTREME TEMPERATURE RANGES AND HUMIDITY MAY ADVERSELY AFFECT THE USEFUL LIFE OF THE SYSTEM'S STANDBY BATTERIES AND THE ELECTRONIC COMPONENTS. THEREFORE, IT IS RECOMMENDED THAT THIS SYSTEM AND ITS PERIPHERALS BE INSTALLED IN AN ENVIRONMENT WITH A NORMAL ROOM TEMPERATURE OF 15 - 27° C (60 - 80° F).

A.1 Wirings and Power

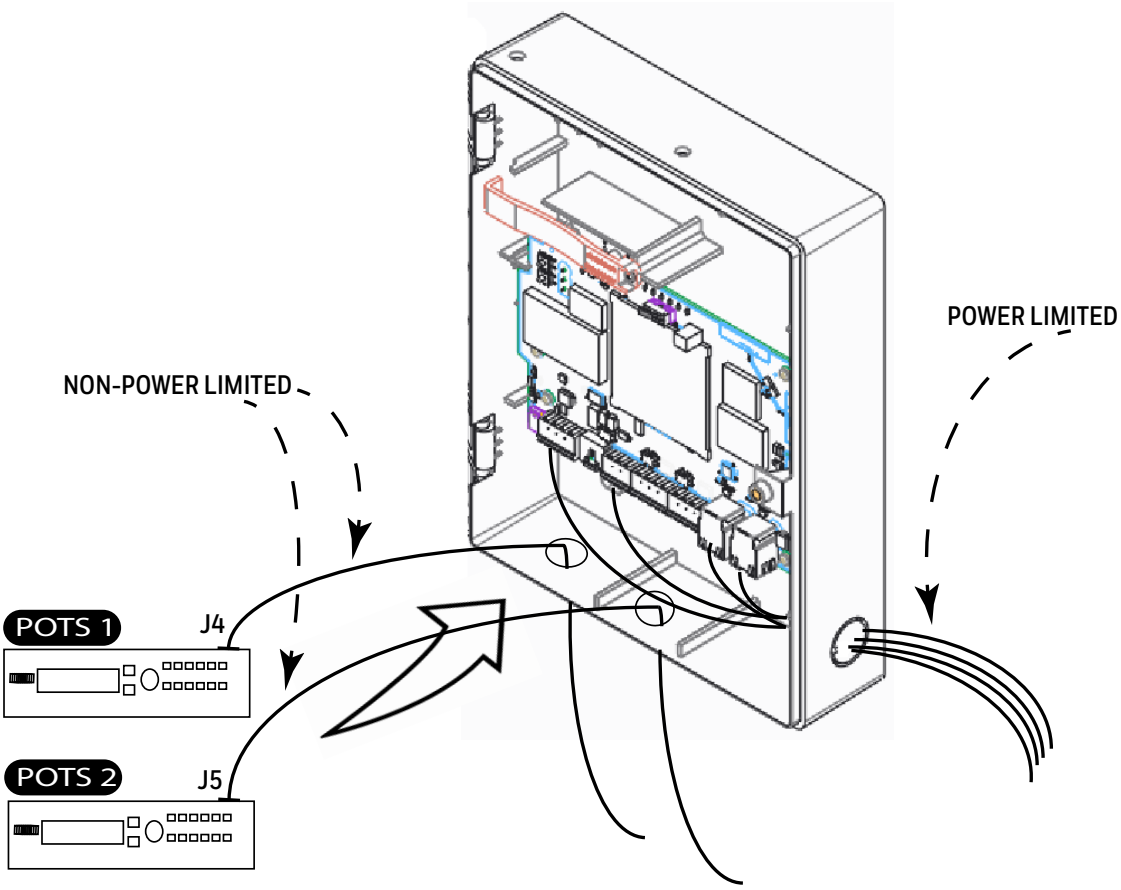

Appendix B: Modulations and Power Used

Radio devices operating on the below frequencies should not be installed next to each other.

Target Power that Meets Spectrum Mask and EVM Compliance

Table B.1: Wireless Power Specifications

2.4 GH z TX Power Specifications							
IEEE 802.11	**Mod**	**Rate**	**BW**	**Channel**	**Spec (TYP)**	**Units**	**Tol. (dB)**
11b	CCK, DSSS	1 to 11 Mbps	20 MHz	1-13	17.5	dBM	+/-2.0
11g	OFDM	6 to 54 Mbps	20 MHz	1-13	15	dBM	+/-2.0
11n	OFDM	MCS 0-7	20 MHz	1-13	15	dBM	+/-2.0
5 GH z TX Power Specifications							
Std	**Mod**	**Rate**	**BW**	**Channel**	**Spec (TYP)**	**Units**	**Tol. (dB)**
11a	OFDM	6-54 Mbps	20 MHz	36-48 52-64 100-144	15	dBM	+/-2.0
11n	OFDM	MCS 0-7	20 MHz	36-48 52-64 100-144	15	dBM	+/-2.0

Appendix C: Connecting to the Panels

C.1 Gateway Board Connections

The gateway board can connect with a cellular module, wireless aerials, the *CLSS Site Manager*, a configuration computer, a panel, a mobile device, and an external power supply.

Figure C.1 illustrates the connection options at the top side of the gateway board.

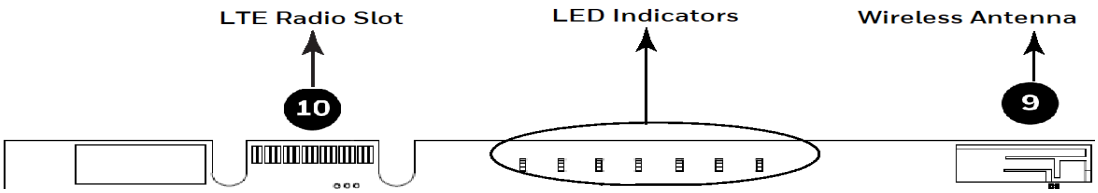

Figure C.1: Gateway Connections - Top Side

Figure C.2 illustrates the gateway connection options at the bottom side of the gateway board.

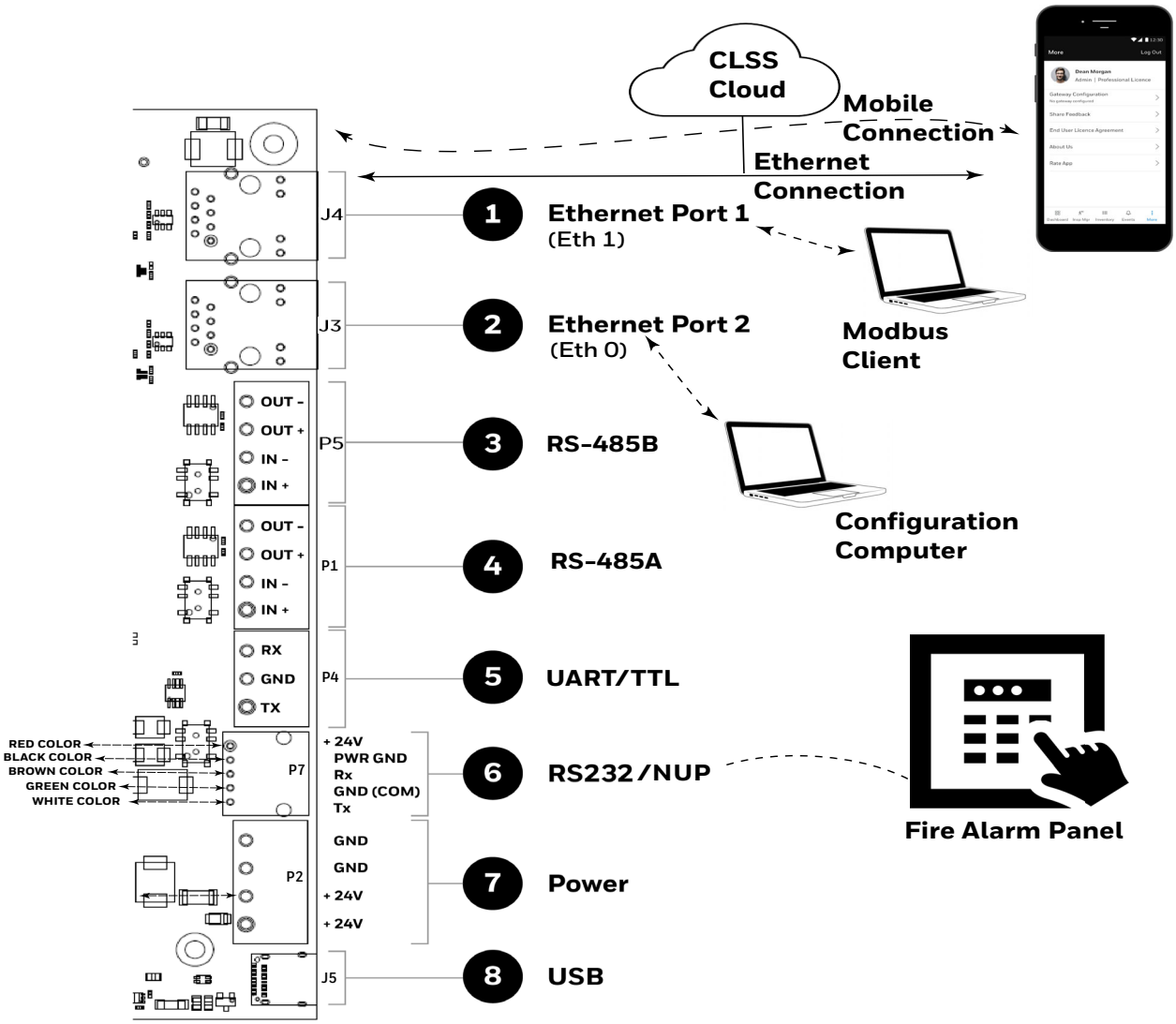

Figure C.2: Gateway Connection Options - Bottom Side

C.1.1 Connecting to a Fire Alarm Panel

The panel sends data from all its devices to the connected CLSS Gateway. The data transmission is based on the connection type and the panel compatibility.

WARNING: WHILE THE GATEWAY IS WORKING DO NOT REMOVE CONNECTIONS TO THE GATEWAY, *CLSS SITE MANAGER*, AND THE PANEL.

NOTE: When the gateway is communicating to a central station through cellular connection, it uses the primary Ethernet connection for *CLSS Site Manager* communications.

NOTE: The interfaces of the gateway board and the panels must be connected only with compatible cables, devices, and wirings.

NOTE: The total power a panel can distribute among its connected devices is limited. Therefore, before connecting the CLSS Gateway to a panel, ensure that the panel can continue to supply the required power to the gateway as well as other connected peripherals.
Refer to the panel and other peripherals' documents to know their power requirements.

Improving the Signal Fidelity

An RS-485 loop of a panel with long cable and multiple devices may affect the signal fidelity. The gateway at the end of such an RS-485 loop can improve the signal fidelity with its termination resistor.

To enable the termination resistor on the gateway board:

If RS-485A is connected, switch the S4 switch to ON. If RS-485B is connected, switch the S5 switch to ON.

When there are no signal issues or when the gateway is not at the end of the loop, ensure that the S4 and S5 switches are switched to OFF.

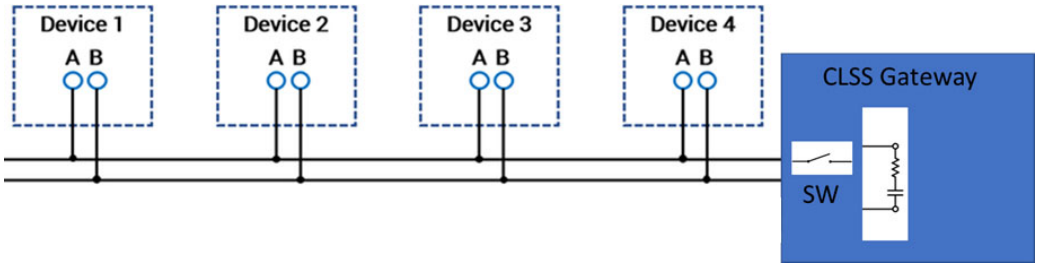

C.2 Supported Panels

The CLSS Gateway supports the following panel variants:

- AM Series Panels
- ESSER Panels
- Farenhyt Panels
- Fire-Lite® Panels
- FireWarden Panels
- Gamewell-FCI Panels
- Gent Panels
- Morley-IAS Panels
- NOTIFIER® UL
- NOTIFIER® European Panels (EN)
- Silent Knight Panels
- Triga Panels
- VESDA® Detectors

C.3 AM Series Panels

C.3.1 Connection Options

The gateway operates only with the AM Series fire alarm control panels listed in the table below:

Table C.1: AM Series Panel Connection Options

Fire Alarm Panel Models	RS-485	UART/TTL	RS-232	USB
AM8200	No	No	Yes[1]	No

1 Use the SIB 8200 board

NOTE: The panel can be a stand alone panel or part of a network of panels.

Minimum Required Versions

For the Panel/CPU1: v1.0.703 | For SIB version Panel: v0.68

For the CLSS Gateway: 3.0.4.56

C.3.2 To Use an RS-232 Connection

Using an RS-232 cable the CLSS Gateway and the panel are connected.

The RS-232 port in the gateway board is labeled as 6 in the Figure C.2.

1. **On the Gateway Side**
   Connect to an RS-232 port of the gateway board.
2. **On the Panel Side**
   - AM8200 Panels

- **AM8200 Panels**
  - Connect the White wire to the RX pin of the SIB 8200 board.
  - Connect the Green wire to the GND pin of the SIB 8200 board.
  - Connect the Brown wire to the TX pin of the SIB 8200 board.

NOTE: Because the SIB 8200 board on the panel connects to the gateway, the SIB board cannot be used for printing the events.

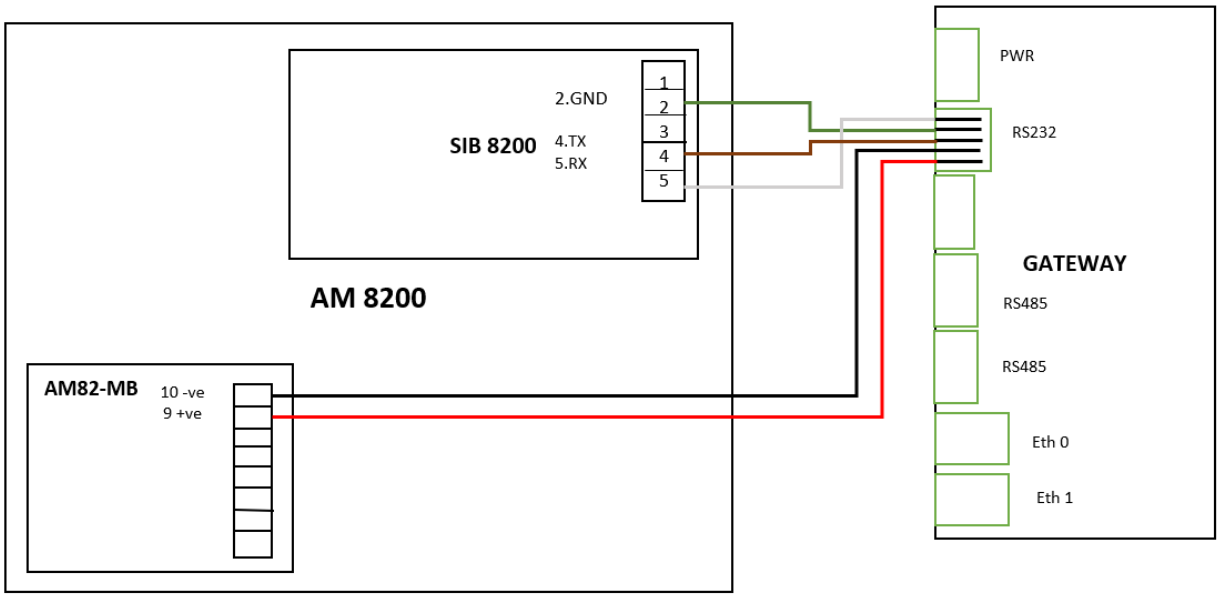

Figure C.3: Wiring Diagram: RS-232 Connection with AM8200 Panel

C.3.3 Power Connection

Using a power cable, the gateway can connect to the 24V DC power supply module of the AM8200 panel.

NOTE:
- Use the details given on the power supply module of the panel.
- The panel's power supply to the gateway must be within +24V DC power.

On the Gateway Side

- Ensure that the RS-232 cable is connected in the RS-232 port of the gateway.

On the Panel Side

- Connect the Red wire to the +ve pin of the AM82-MB board.
- Connect the Black wire to the -ve pin of the AM82-MB board.

C.4 ESSER Panels

A *remote access* connection on RS-232 provides *inventory synchronization*. A *WINMAG* connection on RS-232 or on RS-485 provides *active events*.

You can have either the *remote access* connection or the *WINMAG connection* or both.

Refer to C.4.2 for the *remote access* connection on RS-232. Refer to C.4.10 for the WINMAG connection.

C.4.1 Connection Options

The gateway operates only with the ESSER fire alarm control panels listed in the table below:

Table C.2: ESSER Panel Connection Options

Fire Alarm Panel Models	RS-485	UART/TTL	RS-232	USB
ESCOM	No	No	Yes	No
FlexES Control	Yes	No	Yes[1]	No
IQ8Control C	Yes[2]	No	Yes[1 or 3]	No
IQ8Control M	Yes[2]	No	Yes[1 or 3]	No
CMSI	No	No	No	Yes[4]

1 Use a TTY-RS-232 converter (764856).
2 Use the RS-485 module (784871) along with SEI-2 Card (Serial Essernet® Interface) (784850).
3 Use the RS-232 module (772386) along with SEI Card (Serial Essernet® Interface) (784856).
4 Use the OTG to RS232 converter (CLSS-CMSI-USB).

Minimum Required Versions

ESCOM Panel: 02.06.011

FlexES Panel: 4.07R001

IQ8 Panel: 03.13R000

CMSI8000 Panel: 4.06
CLSS Gateway: 3.1.4.78

C.4.2 To Make a Remote Access Connection on RS-232

Using an RS-232 cable, you can connect to the TTY port of the panel's serial interface.

1. **On the Gateway Side**
   Connect the RS-232 cable with pre-formed connector to the RS-232 port of the gateway board.

   Tip: The RS-232 port in the gateway board is labeled as 6 in the Figure C.2.

2. **On the TTY-RS-232 Converter Side**
   From the gateway:
   - Connect the Rx wire to the Tx pin of the TTY-RS-232 converter.
   - Connect the Tx wire to the Rx pin of the TTY-RS-232 converter.

3. **On the Panel Side**
   - For FlexES Panels
   - For IQ8 Panels

- **For FlexES Panels**
  Connect as below:

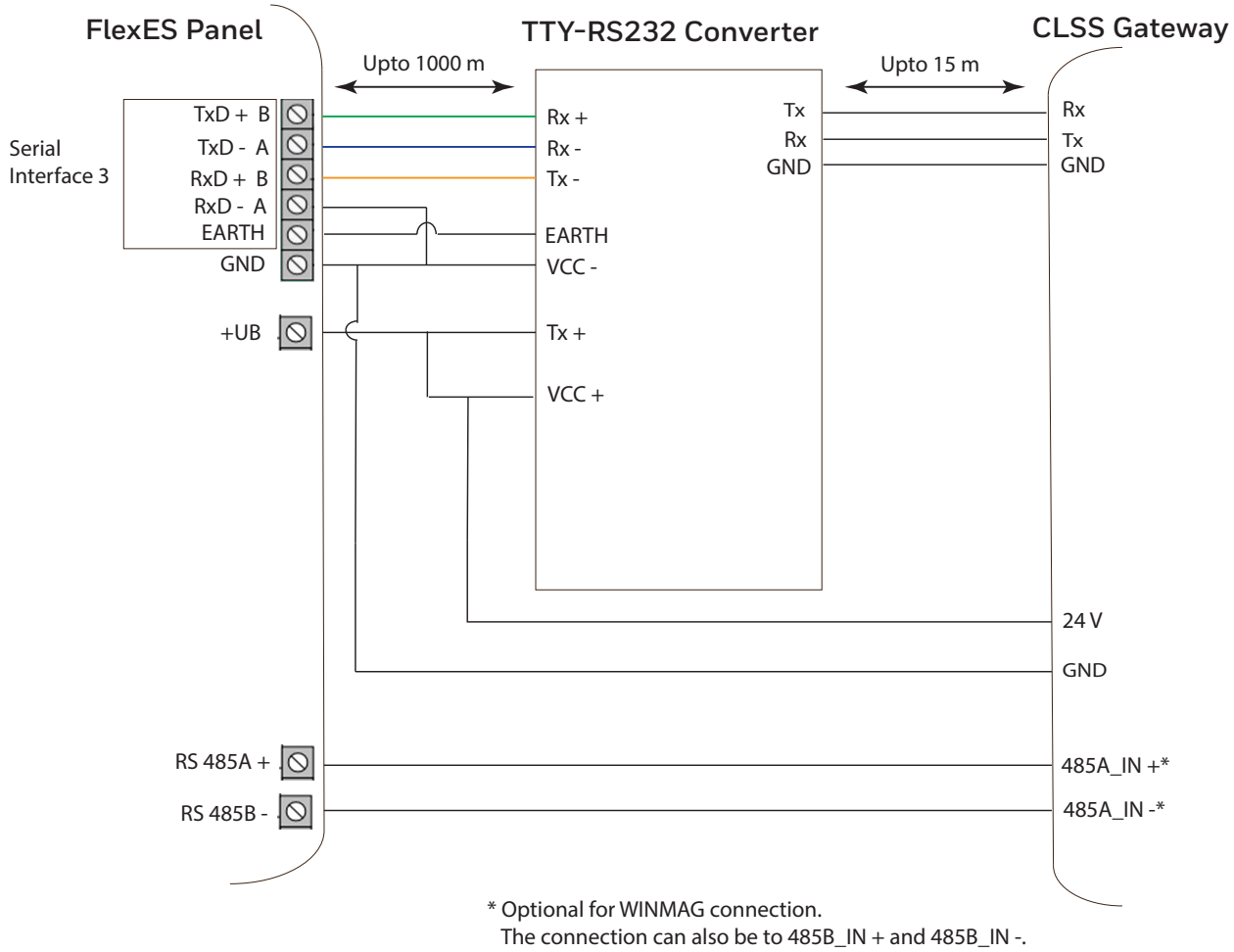

Figure C.4: RS-232 Connection on a FlexES Panel

■ **Tools 8000 Settings for FlexES Panels**

1. Select the **Serial Interfaces** tab in Tools 8000.
2. Go to the **Serial Interface 3** section.
3. Select *Remote Access* from the **Device in use** list.
4. Click **OK**.

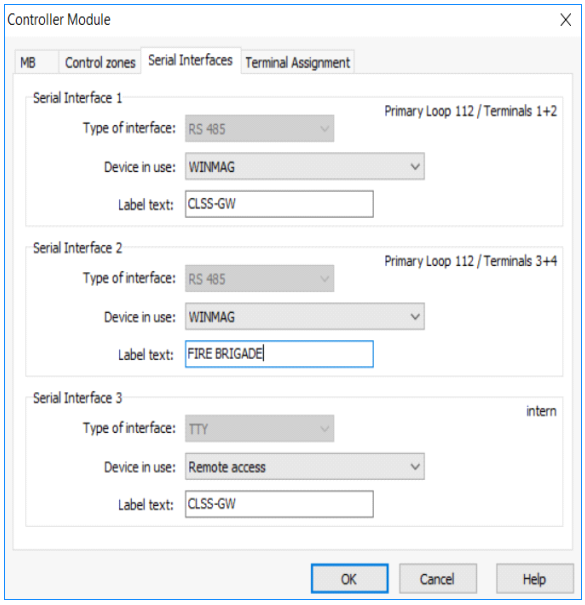

- **For IQ8 Panels**

Using an RS-232 cable, you can connect to the RS-232 port on the panel's serial interface.

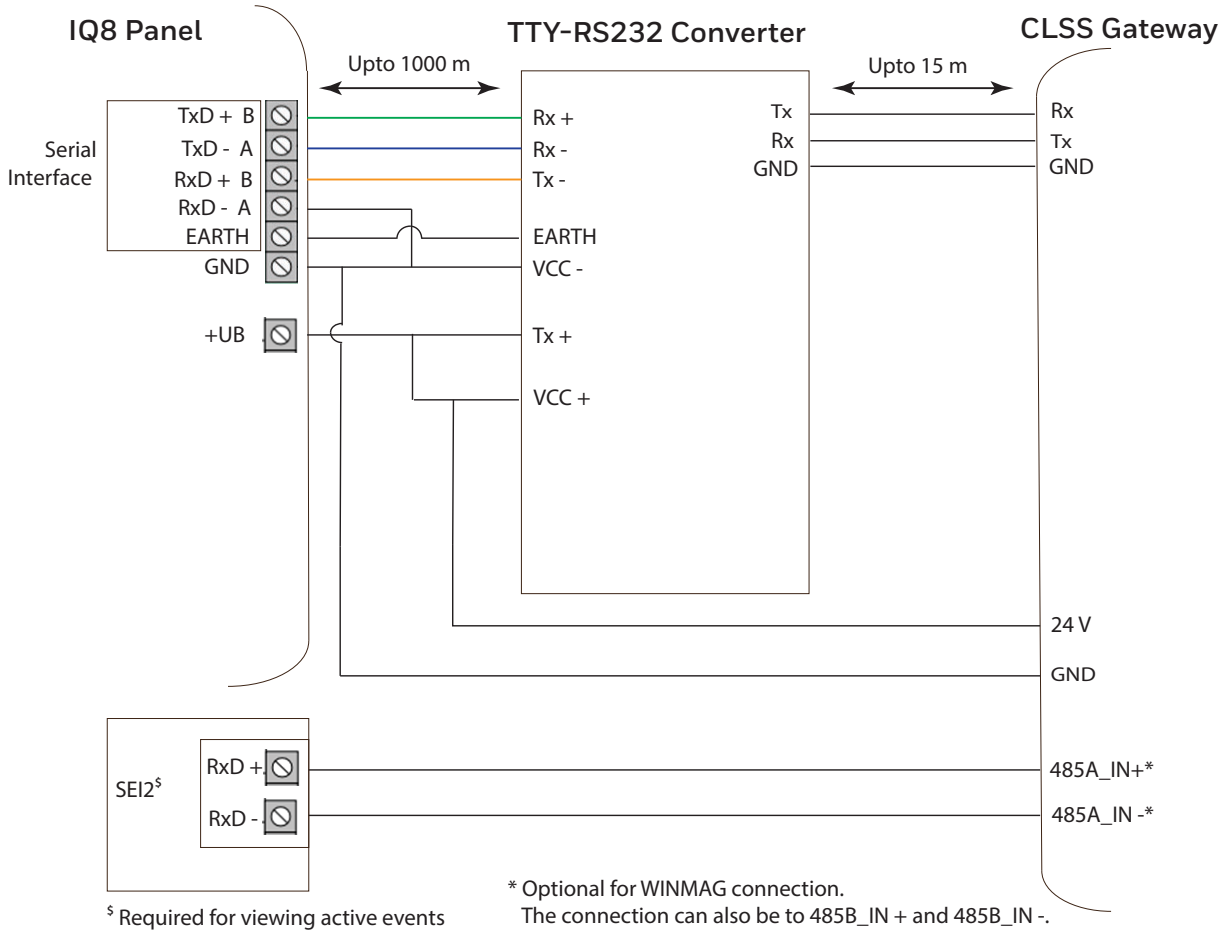

Figure C.5: RS-232 Connection on an IQ8 Panel

■ **Tools 8000 Settings for IQ8 Panels**

1. Double click on **Serial Interface** in Tools 8000.
2. Select *RS-232* from the **Type of interface** list.
3. Select *Remote Access* from the **Device in use** list.
4. Click **OK**.

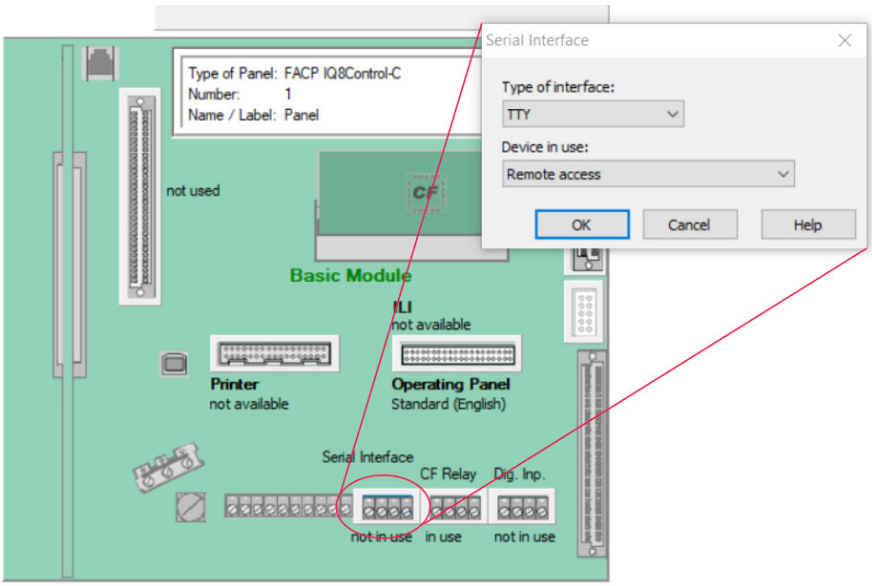

C.4.3 To Make a WINMAG Connection on RS-232

Using an RS-232 cable the CLSS Gateway and the panel are connected.

The RS-232 port in the gateway board is labeled as 6 in the Figure C.2.

1. **On the Gateway Side**
   Connect to an RS-232 port of the gateway board.
2. **On the Panel Side**
   - For ESCOM Panels

- **For ESCOM Panels**
  - Connect the White wire to the RxD+ pin.
  - Connect the Brown wire to the TxD+ pin.
  - Connect the Green wire to the 0V pin.

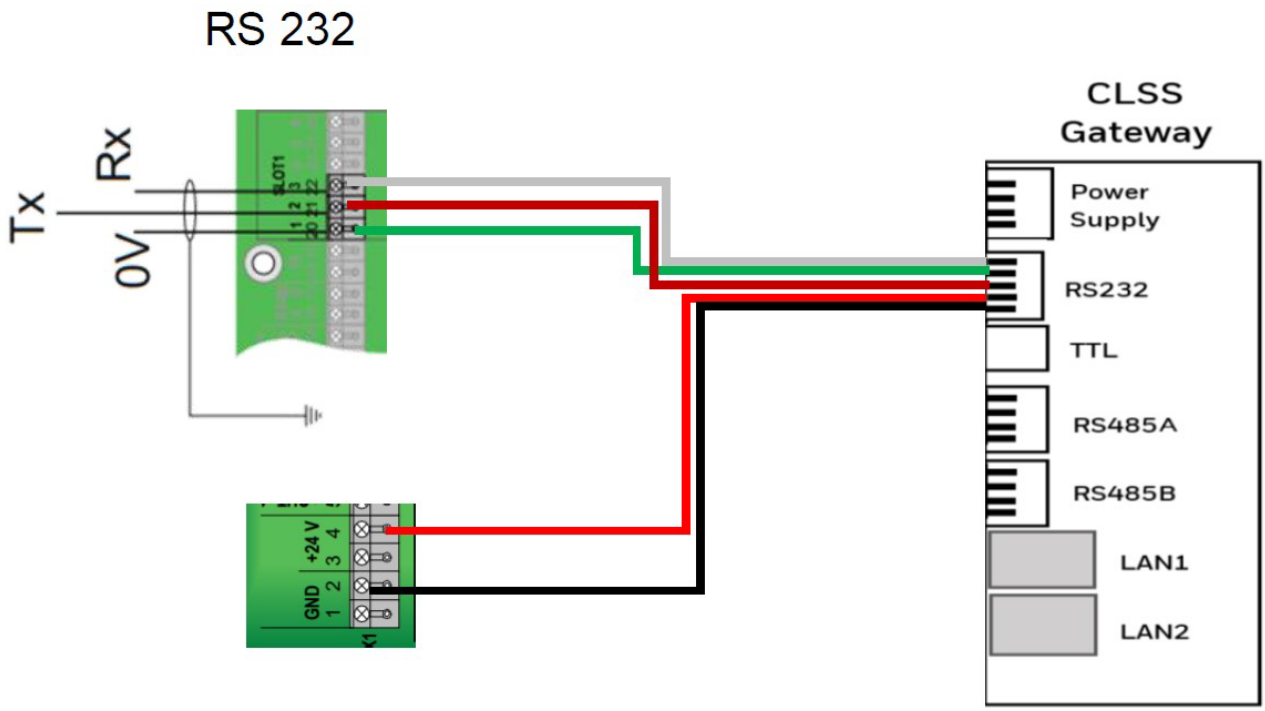

Figure C.6: Wiring Diagram: RS232 Connection for an ESCOM Panel

C.4.4 Power Connection

Using the RS-232 cable, the gateway can connect to the 24V DC power supply module of the ESCOM panel.

NOTE: Use the details given on the power supply module of the panel.

NOTE: The panel's power supply to the gateway must be within +24V DC power.

On the Gateway Side

- Connect the +ve wire to the +ve pin of the power supply port.
- Connect the -ve wire to the -ve pin of the power supply port.

On the Panel Side

- Connect the +ve wire to the +24 pin of the power supply module.
- Connect the -ve wire to the Gnd pin of the power supply module.

■ **Tools 8000 Settings for ESCOM Panels**

1. Select the **Serial Interfaces** tab on Tools 8000.
2. Click **in use**.
3. Go to the **Serial Interface 1** section in the **Serial Interface** dialog.
4. Select *RS 232* from the **Type of Interface** list.
5. Select *WINMANG* from the **Device in use** list.
6. Enter the gateway name in the **Label** field.
7. Click **OK**.

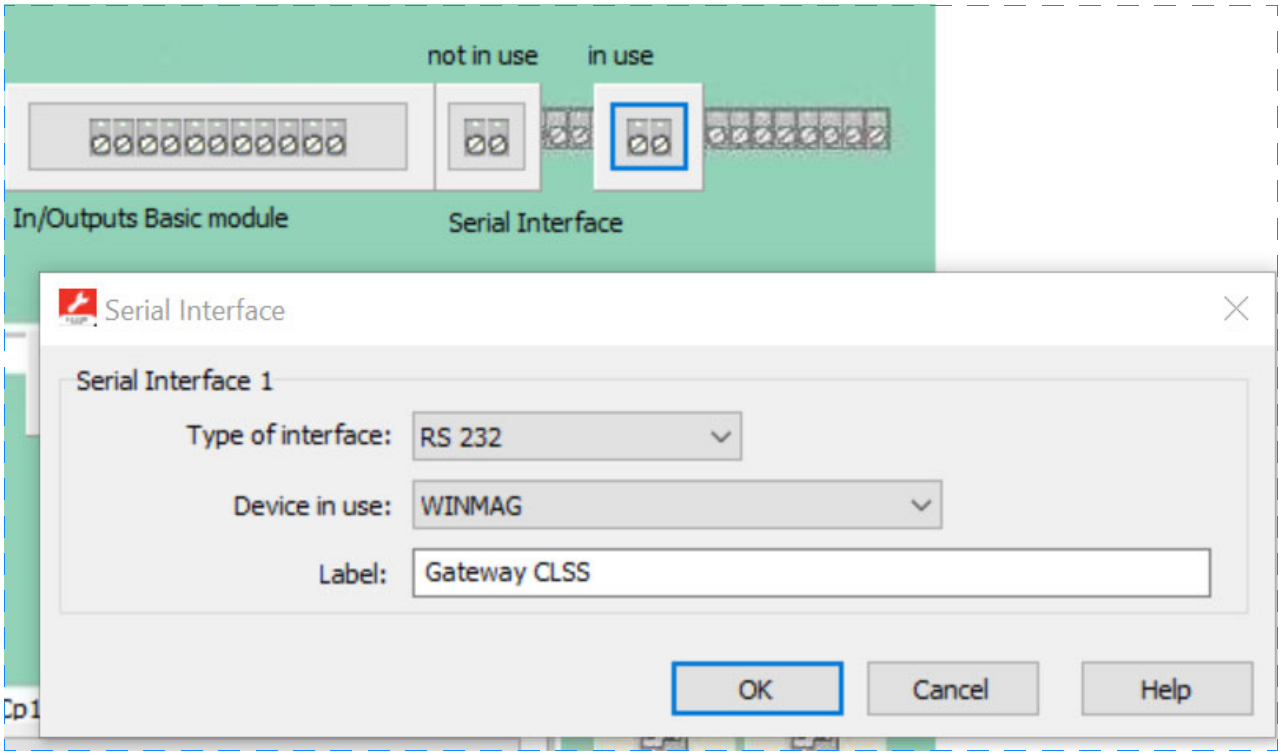

C.4.5 To Make a WINMAG Connection Using an SEI 1 Card

Using an SEI1 Card Connect to the RS232 module (772386) as below:

1. **On the Gateway Side**

   Connect the RS232 cable with pre-formed connector to the RS232 port of the gateway board.

   Tip: The RS232 port in the gateway board is labeled as 6 in the Figure C.2.

2. **On the Panel Side**

   - IQ8: Connecting through a Serial Interface Card

IQ8: Connecting through a Serial Interface Card

- Connect the White wire to the RxD+ pin.
- Connect the Green wire to the GND pin.
- Connect the Brown wire to the TxD+ pin.

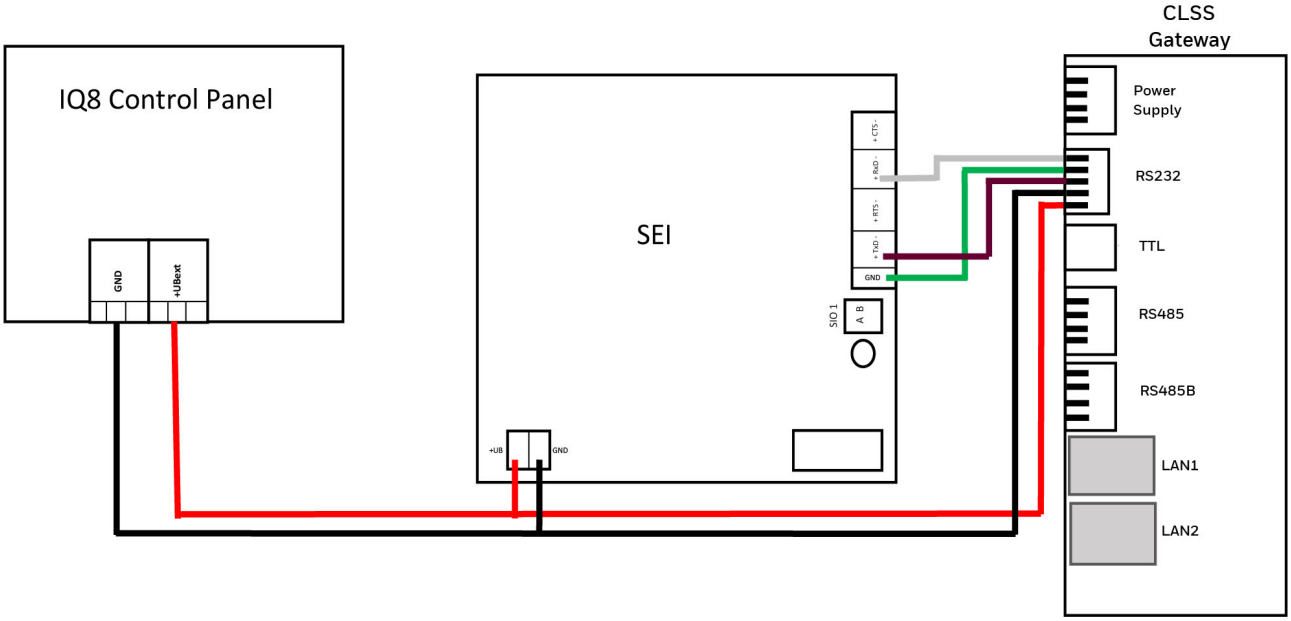

Figure C.7: Wiring Diagram: RS232 Connection for an IQ8 Panel

C.4.6 Power Connection

- **For FlexES Panels**

  Using a power cable, the gateway can connect to the 24V DC power supply module of the FlexES panel.

NOTE: Use the details given on the power supply module of the panel.

NOTE: The panel's power supply to the gateway must be within +24V DC power.

On the Gateway Side

- Connect the +ve wire to the +ve pin of the power supply port.
- Connect the -ve wire to the -ve pin of the power supply port.

On the Panel Side

- Connect the +ve wire to the +Ub pin of the power supply module.
- Connect the -ve wire to the Gnd pin of the power supply module.

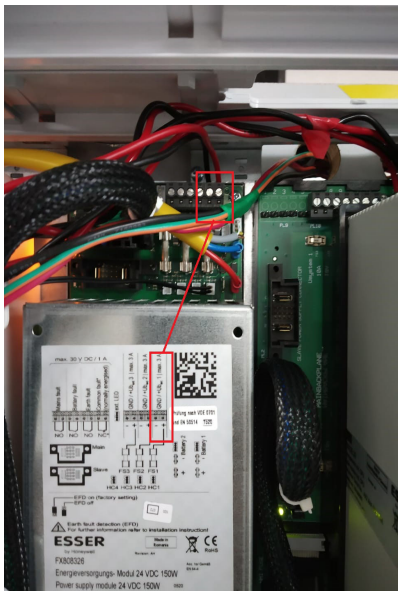

Figure C.8: FlexES Panel Power Connectors

■ Tools 8000 Settings for FlexES Panels

1. Select the **Serial Interfaces** tab in Tools 8000.
2. Go to the **Serial Interface 1** section.
3. Select *WINMANG* from the **Device in use** list.
4. Go to the **Serial Interface 3** section.
5. Select *Remote Access* from the **Device in use** list.
6. Click **OK**.

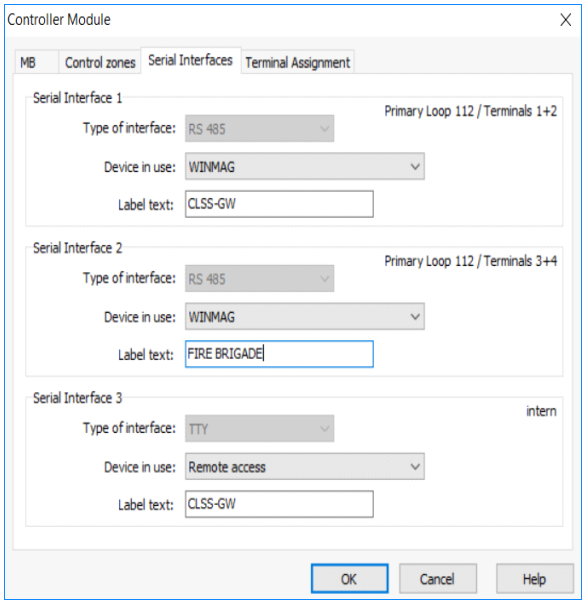

C.4.7 To Make a WINMAG Connection Using an SEI 2 Card

Using an RS-485 cable, you can connect to the additional RS-485 module (784871) on the panel's serial interface port.

The RS-485 ports in the gateway board are labeled as 3 and 4 in the Figure C.2.

1. **On the Gateway Side**
   Connect to an RS-485 port of the gateway board.
2. **On the Panel Side**
   - For IQ8 Panels

For IQ8 Panels

Using an SEI2 Card Connect to the RS-485 (784871) module in the panel as below:

In the RXD port of the panel's SEI-2 card:

- Connect the In+ wire to the RXD+ pin.
- Connect the In- wire to the RXD- pin.

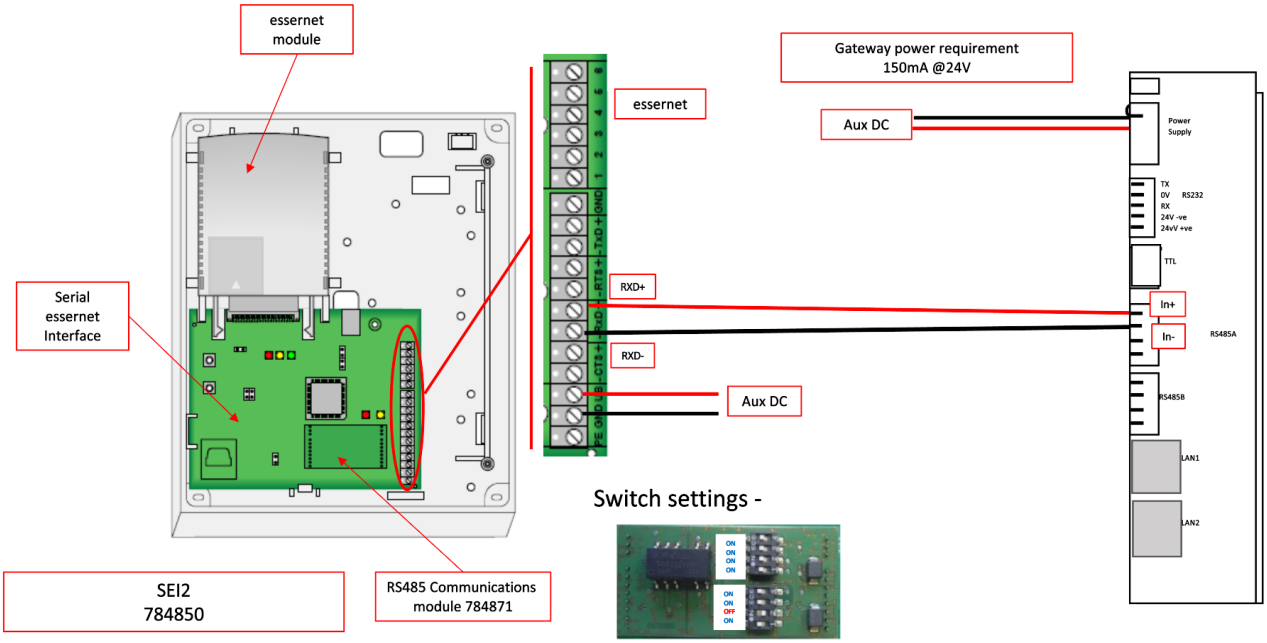

Figure C.9: Wiring Diagram: RS-485 to SEI2 Connection

C.4.8 Power Connection

Using a power cable, the gateway can connect to the 12V DC power supply module of the panel.

NOTE: Although the gateway is capable of receiving 24V DC power, it can work with the 12V DC power of the IQ8 panel. Ensure that the power supply to the gateway is within +12V DC power.

On the Gateway Side

- Connect the +ve wire to the +ve pin of the power supply port.
- Connect the -ve wire to the -ve pin of the power supply port.

On the Panel Side

- Connect the +ve wire to the +UBext pin of the SEI-2 card.
- Connect the -ve wire to the GND pin of the SEI-2 card.

C.4.9 Power Connection

Using a power cable, the gateway can connect to the 12V power supply module of the IQ8 panel.

NOTE: Use the details given on the power supply module of the panel.

NOTE: Although the gateway is capable of receiving 24V DC power, it can work with the 12V DC power of the IQ8 panel. Ensure that the power supply to the gateway is within +12V DC power.

On the Gateway Side

- Ensure that the RS-232 cable is connected in the RS-232 port of the gateway.
- Switch the S7 Switch next to the RS-232 port towards *NUP_IN*.

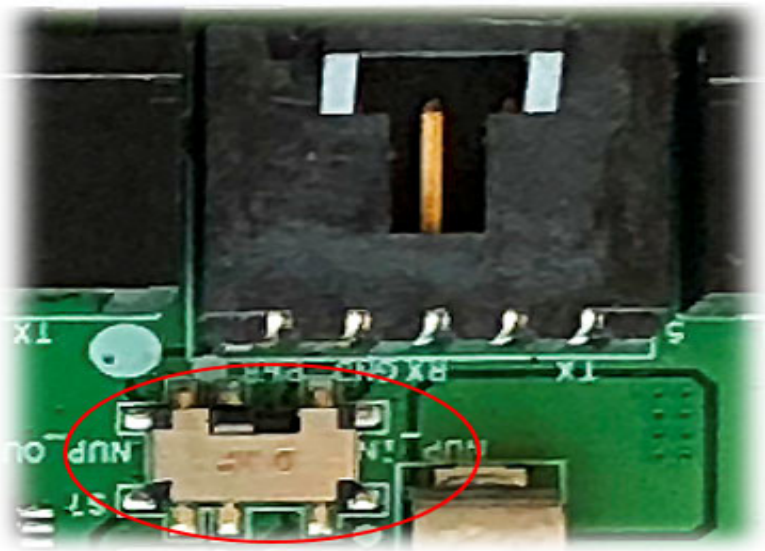

Figure C.10: The S7 Switch

On the Panel Side

- Connect the +ve wire to the +Ub pin of the SEI card.
- Connect the -ve wire to the Gnd pin of the SEI card.

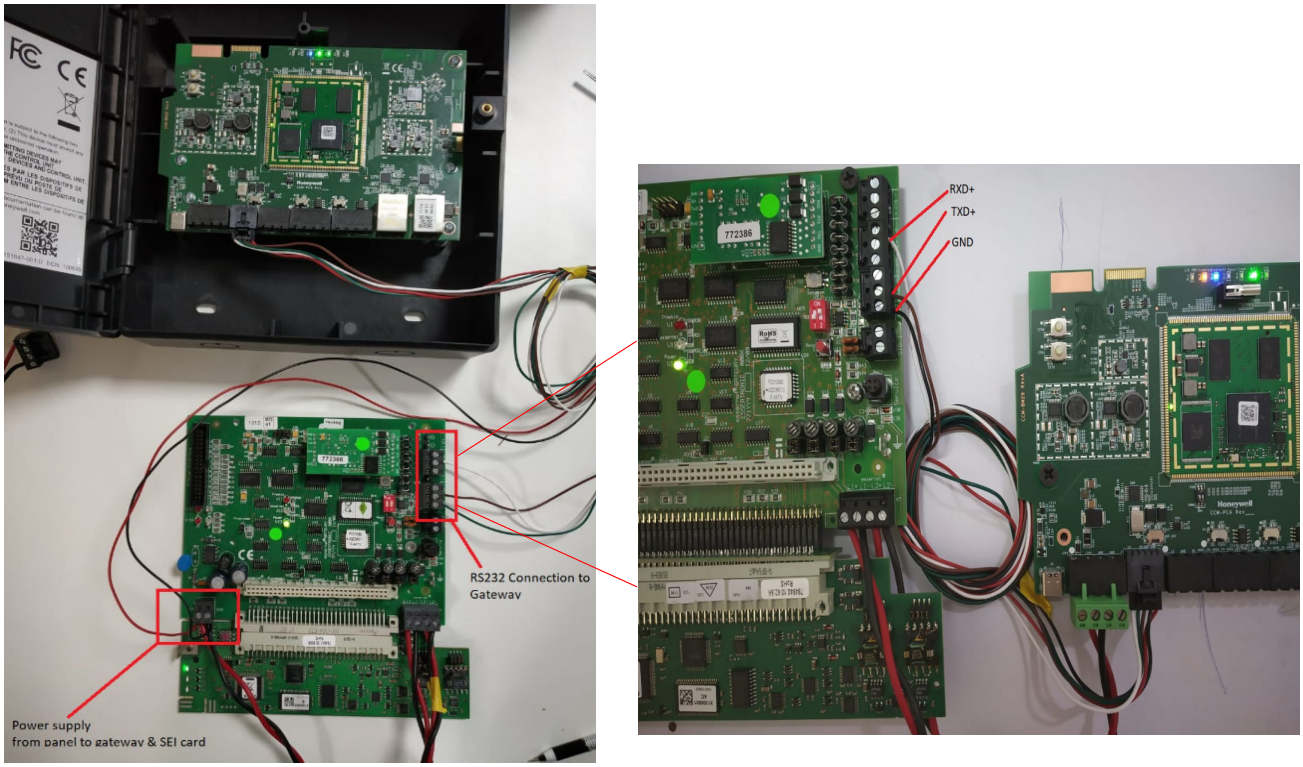

Figure C.11: IQ8 Panel RS-232 Power Connectors

C.4.10 To Make a WINMAG Connection on RS-485

Using an RS-485 cable the CLSS Gateway and the panel are connected.

The RS-485 ports in the gateway board are labeled as 3 and 4 in the Figure C.2.

1. **On the Gateway Side**
   Connect to an RS-485 port of the gateway board.
2. **On the Panel Side**
   - For FlexES Panels
   - To Make a WINMAG Connection Using an SEI 2 Card

For FlexES Panels

- Connect the +ve wire to the Terminal 1 of the panel.
- Connect the -ve wire to the Terminal 2 of the panel.

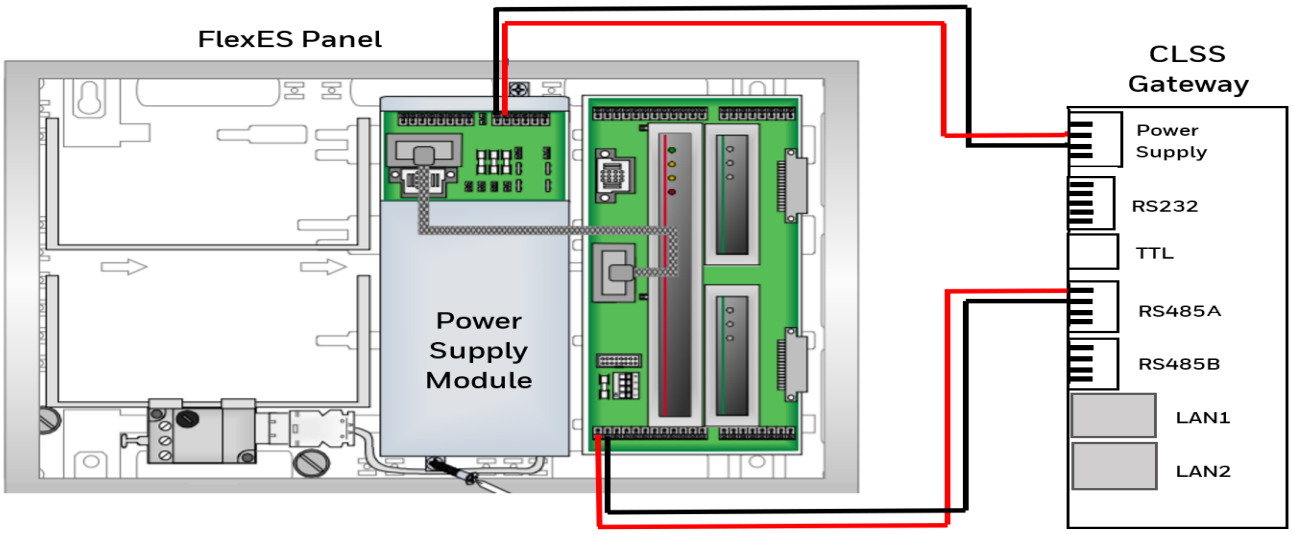

Figure C.12: Wiring Diagram: RS-485 Connections for a FlexES Panel

■ Tools 8000 Settings for FlexES Panels

1. Select the **Serial Interfaces** tab on Tools 8000.
2. Go to the **Serial Interface 1** section.
3. Select *WINMANG* from the **Device in use** list.
4. Click **OK**.
5. Go to the **Serial Interface 3** section.
6. Select *Remote Access* from the **Device in use** list.

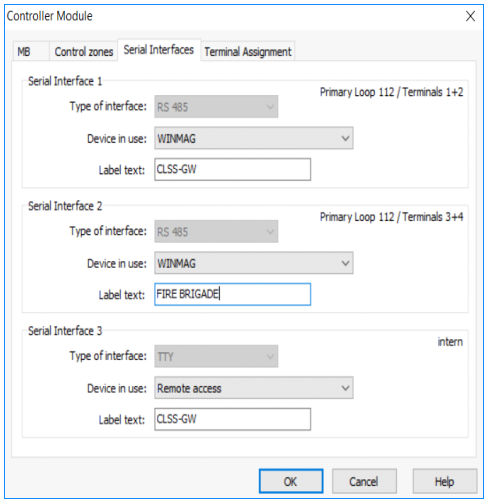

C.4.11 To Make a CMSI Connection Using an OTG-RS232 Cable

Using an OTG-RS232 cable, connect the CLSS Gateway and the panel as shown in Figure C.13.

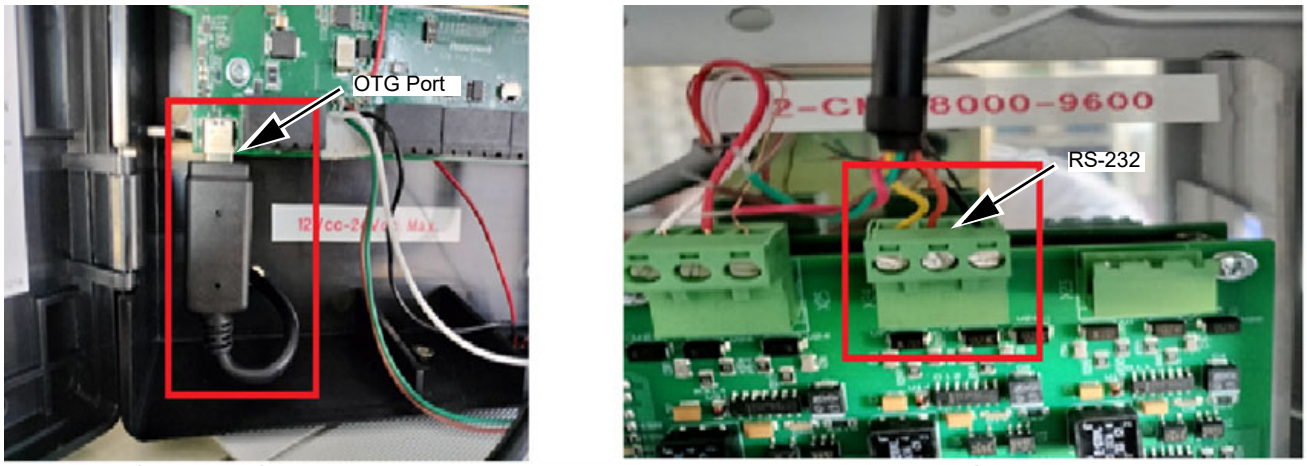

Gateway Side **Panel Side**

Figure C.13: CMSI Connections

- **CMSI 8000 Settings for CMSI Panel**

1. Add the UAE settings on the panel and enable them as shown in Figure C.14.

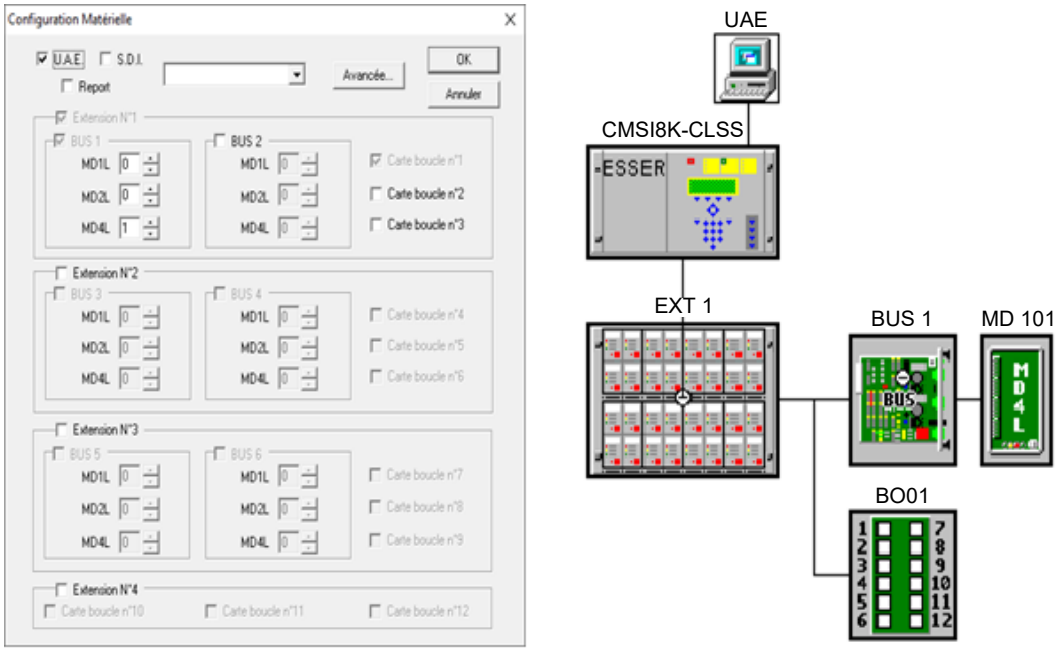

Figure C.14: CMSI Panel Settings

C.5 Farenhyt Panels

C.5.1 Connection Options

The gateway operates only with the Farenhyt fire alarm control panels listed in the table below:

Table C.3: Farenhyt Panel Connection Options

Fire Alarm Panel Models	RS-485	UART/TTL	RS-232	USB
Panel firmware version: 6.05.03				
IFP-75	Yes	No	No	No
IFP-300	Yes	No	No	No
IFP-300ECS	Yes	No	No	No
IFP-2100	Yes	No	No	No
IFP-2100ECS	Yes	No	No	No
Panel firmware version: 5.0				
IFP-50	Yes	No	No	No
IFP-100	Yes	No	No	No
IFP-100ECS	Yes	No	No	No
IFP-1000	Yes	No	No	No
IFP-1000ECS	Yes	No	No	No
IFP-2000	Yes	No	No	No
IFP-2000ECS	Yes	No	No	No

CAUTION: WHEN SUPPORTING THE ALARM TRANSMISSION, IT IS RECOMMENDED THAT THE FARENHYT PANEL SHOULD USE SECONDARY ANN BUS CHANNEL WITH CLASS A WIRING. IF THE ALARM TRANSMISSION SERVICE IS *NOT* USED, THE PANEL CAN USE EITHER THE PRIMARY OR THE SECONDARY ANN BUS CHANNEL FOR THE CLSS GATEWAY CONNECTION.

Minimum Required Versions

For the CLSS Gateway: 3.3.4.12

C.5.2 To Use an RS-485 Connection

Using an RS-485 cable the CLSS Gateway connects with the annunciator primary terminal of the panel.

CAUTION: CONNECT EITHER THE CLSS GATEWAY OR THE ANN S/P G MODULE WITH THE PANEL. BOTH OF THEM SHOULD NOT BE CONNECTED TOGETHER WITH THE PANEL.

1. **On the Gateway Side**

   At the RS-485 A port in the gateway board:

   - Connect the A connector to the IN+ pin of the RS-485 A port.
   - Connect the B connector to the IN- pin of the same RS-485 A port.

   The RS-485 ports in the gateway board are labeled as 3 and 4 in the Figure C.2.

2. **On the Panel Side**

   At the S-BUS board in the ANN-BUS PRI terminal:

   - Connect the RS-485 +ve wire to the A port.
   - Connect the RS-485 -ve wire to the B port.

C.5.3 Power Connection

On the Gateway Side

In the power supply port (labeled 7 in the Figure C.2):

- Connect the Red wire to the +24V pin.
- Connect the Black wire to the Gnd pin.

On the Panel Side

In the power board of the panel:

- Connect the Red wire to the +ve pin.
- Connect the Black wire to the -ve pin.

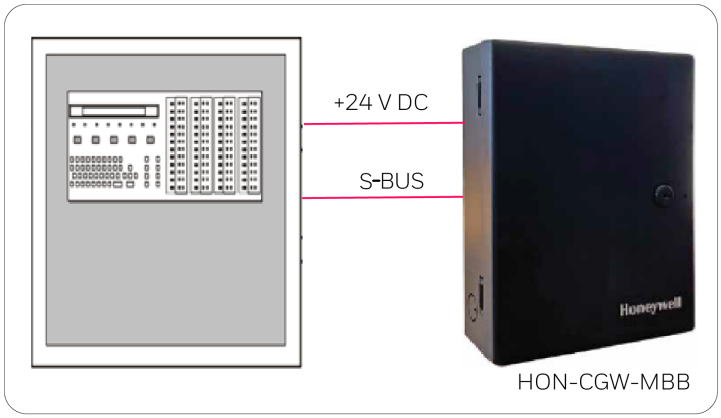

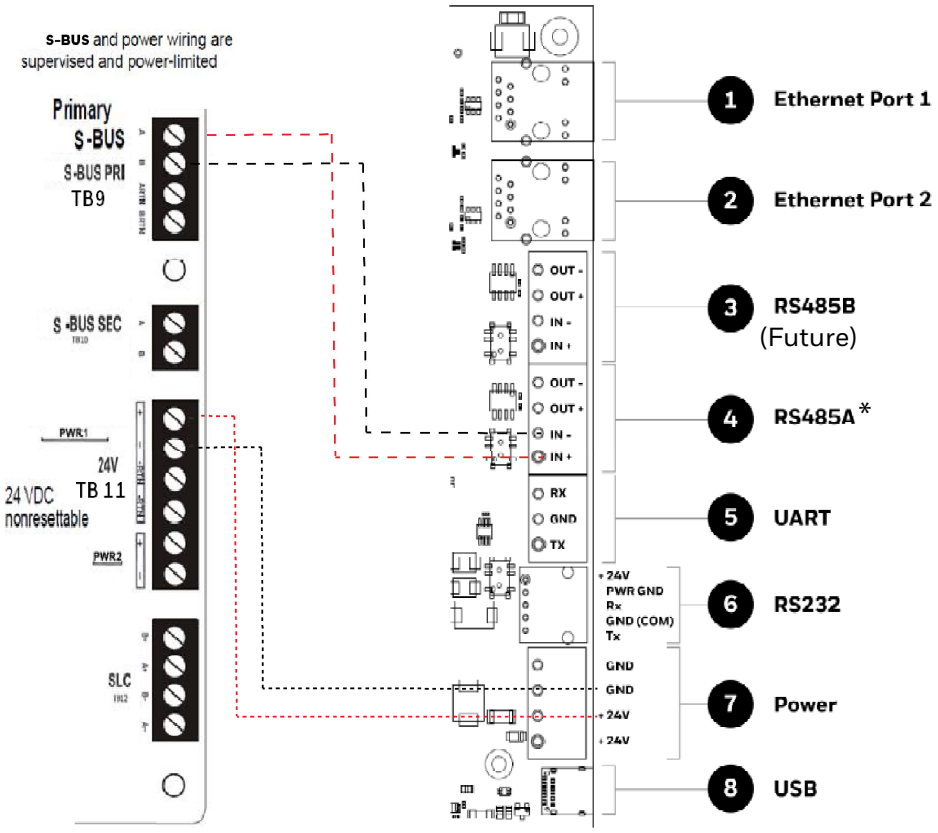

(* For panel connection, use only the RS-485A port)

Figure C.15: Farenhyt Panel: RS-485 Connections

C.5.4 Programming for Annunciator (ANN-PRI)

Programming enables the panel to recognize the CLSS gateway and the annunciator.

CAUTION: BEFORE PROGRAMMING, ENSURE THAT THE ANN-PRI COMMUNICATION CABLE IS CONNECTED WITH THE PANEL.

C.5.5 To Program for Annunciator

Using the keypad on the panel, you select options on the screens.

1. On the panel, press the **Enter** button on the keypad.
2. View the panel screen options.
3. On the keypad, press **7** to select `7 = PROGRAMMING MODE`.
4. Enter the panel's password in the `PROGRAMMING` screen.
   The default password is: 00000000
5. Select the panel connected with the gateway, if it is a standalone panel.

   OR

   Navigate in the list of panels and select the panel connected with the gateway if it is a multi-panel network.
6. Select `1 = MODULE`.
7. Select `2 = ADD MODULE`.
8. Select the module of the gateway from the list. Example: `5824-Serial/Parallel/IO`
9. Select the module type.
10. Select `1 = EDIT MODULE` to enter the module details.
11. Provide the **Module ID** details.
12. Navigate to next menu.
13. Select `Output Port = PARALLEL`.
14. Select `Event Logging = YES`.
15. Navigate to next menu.
16. Select `Baud Rate = 19200`.
17. Keep the default values for other fields.
18. Review the entered details.
19. Save the changes.

C.6 Fire-Lite® Panels

C.6.1 Connection Options

The gateway operates only with the Fire-Lite fire alarm control panels as listed in the table below:

Table C.4: Fire-Lite Panel Connection Options

Fire Alarm Panel Models	RS485	UART/TTL	RS232	USB
ES50X	Yes	No	No	No
ES200X	Yes	No	No	No
MS-9600LS	Yes	No	No	No
MS-9600UDLS	Yes	No	No	No
MS-9050	Yes	No	No	No
MS-9200	Yes	No	No	No

C.6.2 To Use an RS485 Connection

Using an RS485 cable the CLSS Gateway connects with the annunciator primary terminal of the panel.

CAUTION: CONNECT EITHER THE CLSS GATEWAY OR THE ANN S/P G MODULE WITH THE PANEL. BOTH OF THEM SHOULD NOT BE CONNECTED TOGETHER WITH THE PANEL.

1. **On the Gateway Side**

   At the RS485 port in the gateway board:

   - Connect the A connector to the IN+ pin of the RS485 port.
   - Connect the B connector to the IN- pin of the same RS485 port.

   The RS485 ports in the gateway board are labeled as 3 and 4 in the Figure C.16.

2. **On the Panel Side**

   At the TB9 port in the ANN-BUS PRI terminal:

   - Connect the RS485 +ve wire to the A port.
   - Connect the RS485 -ve wire to the B port.

C.6.3 Power Connection

Using a power cable, the gateway connects to the 24V DC power supply port of the panel.

On the Gateway Side

In the power supply port (labeled 7 in the Figure C.16):

- Connect the Red wire to the +24V pin.
- Connect the Black wire to the Gnd pin.

On the Panel Side

In the TB11 port of the panel:

- Connect the Red wire to the +ve pin.
- Connect the Black wire to the -ve pin.

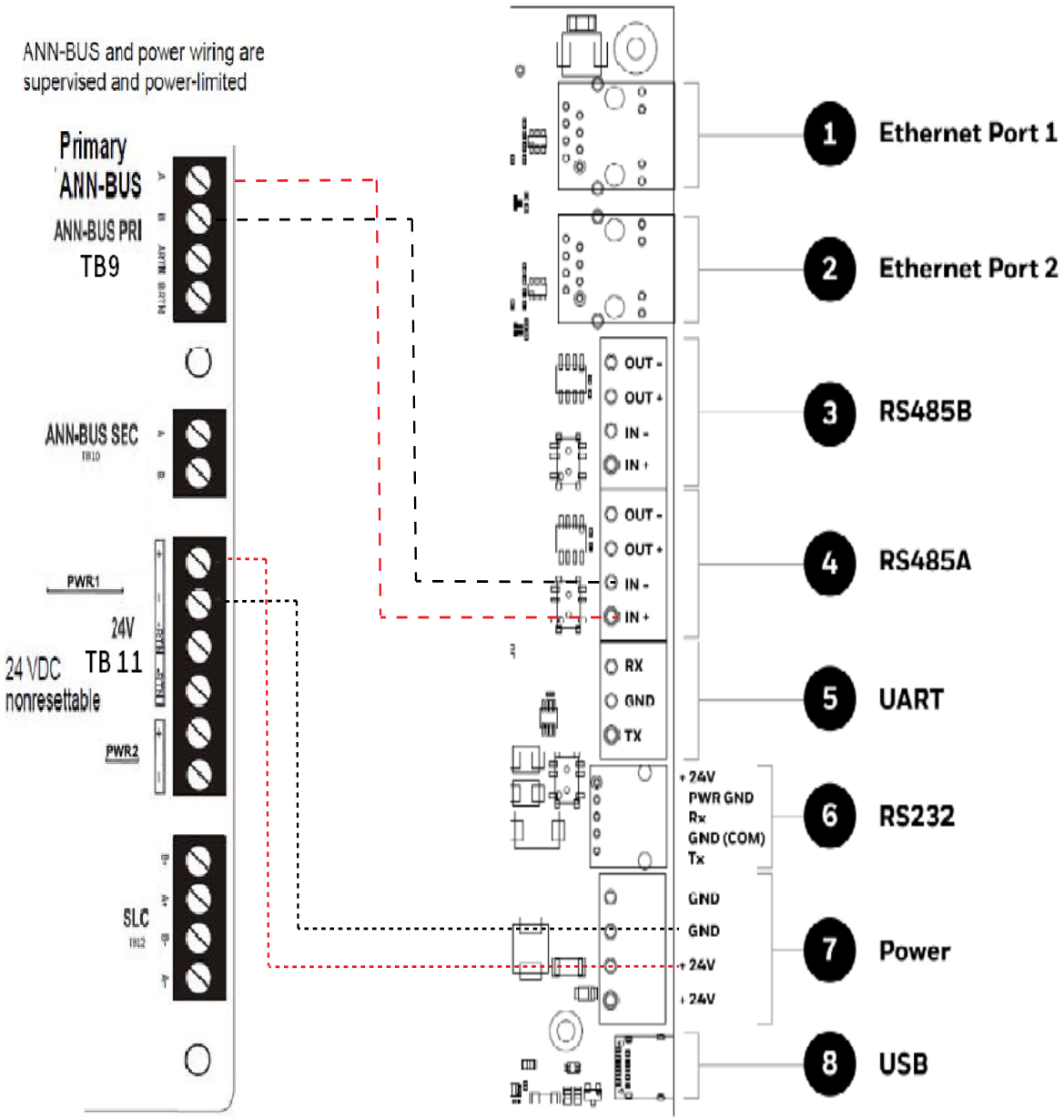

Figure C.16: Fire-Lite Panel: RS485 Connections

C.6.4 Programming for Annunciator (ANN-PRI)

Programming enables the panel to recognize the CLSS gateway and the annunciator.

CAUTION: BEFORE PROGRAMMING, ENSURE THAT THE ANN-PRI COMMUNICATION CABLE IS CONNECTED WITH THE PANEL.

C.6.5 To Program for Annunciator

Using the keypad on the panel, you select options on the screens.

1. On the panel, press the **Enter** button on the keypad.
2. View the panel screen options.
3. On the keypad, press **2** to select `2 = PROGRAMMING MODE`.
4. Enter the panel's password in the `PROGRAMMING` screen.
   The default password is: 00000000
5. Press the down arrow button to select `2 = POINT PRGORAM`.
6. Select `3 = FUTURE USE` and then select `3 = ANNUNCIATORS`.
7. Select `1 = PRIMARY` on the `ANN-BUS SELECT` screen.
8. Ensure `1 = ENABLED YES` on the `ANN PRIMARY` screen.
9. Select `2 = MODULES INSTALLED`.
10. Select `1 = ADDR. 1-1  NONE` on the `ANN-BUS MODULES` screen.
11. Ensure `1 = TYPE NONE` on the `ANN-BUS MODULE 1-1` screen.
12. Press the down arrow button once to go back to the `ANN-BUS MODULE TYPE` screen.
13. Press the down arrow button to go to the next screen.
14. Select `2 = ANN-S/PG MODULE`.
15. On the keypad, press the **Esc** key three times to go back to the `ANN/BUS SELECT` screen.
16. Select `3 = ANN-BUS OPTIONS`.
17. Press `1 = ANN-S/PG OPTIONS` on the `ANN-BUS` screen.
18. Ensure the following settings on the `ANN-S/PG OPTIONS` screen:

    `1 = PORT  PAR`

    `2 = PRINTER SUPV  YES`

    `3 = OFFLINE TIMER  0`

19. Press the **Esc** button continuously until the main screen appears.

The panel saves the changes and resets.

To Verify the Changes

It is a good practice to confirm that the panel reflects the changes you did.

1. Use the keypad and go to the `ANN-BUS MODULES` screen.
2. Check that `1 = ADDR.1-1  ANN-S/PG` on the `ANN-BUS MODULE 1-1` screen.
3. Check that no ANN primary fault is reported on the main screen.

C.7 FireWarden Panels

C.7.1 Connection Options

The gateway operates only with the FireWarden fire alarm control panels listed in the table below:

Table C.5: FireWarden Panel Connection Options

Fire Alarm Panel Models	RS-485	UART/TTL	RS-232	USB
FireWarden-50X	Yes	No	No	No
FireWarden-100X	Yes	No	No	No

CAUTION: WHEN SUPPORTING THE ALARM TRANSMISSION, IT IS RECOMMENDED THAT THE FIREWARDEN PANEL SHOULD USE SECONDARY ANN BUS CHANNEL WITH CLASS A WIRING. IF THE ALARM TRANSMISSION SERVICE IS *NOT* USED, THE PANEL CAN USE EITHER THE PRIMARY OR THE SECONDARY ANN BUS CHANNEL FOR THE CLSS GATEWAY CONNECTION.

Minimum Required Versions

For the Panel: 1.03.006

For the CLSS Gateway: 3.0.3.116

C.7.2 To Use an RS-485 Connection

Using an RS-485 cable the CLSS Gateway connects with the annunciator primary terminal of the panel.

CAUTION: CONNECT EITHER THE CLSS GATEWAY OR THE ANN S/P G MODULE WITH THE PANEL. BOTH OF THEM SHOULD NOT BE CONNECTED TOGETHER WITH THE PANEL.

1. **On the Gateway Side**

   At the RS-485 port in the gateway board:

   - Connect the A connector to the IN+ pin of the RS-485 port.
   - Connect the B connector to the IN- pin of the same RS-485 port.

   The RS-485 ports in the gateway board are labeled as 3 and 4 in the Figure C.2.

2. **On the Panel Side**

   At the TB9 port in the ANN-BUS PRI terminal:

   - Connect the RS-485 +ve wire to the A port.
   - Connect the RS-485 -ve wire to the B port.

C.7.3 Power Connection

On the Gateway Side

In the power supply port (labeled 7 in the Figure C.2):

- Connect the Red wire to the +24V pin.
- Connect the Black wire to the Gnd pin.

On the Panel Side

In the TB11 port of the panel:

- Connect the Red wire to the +ve pin.
- Connect the Black wire to the -ve pin.

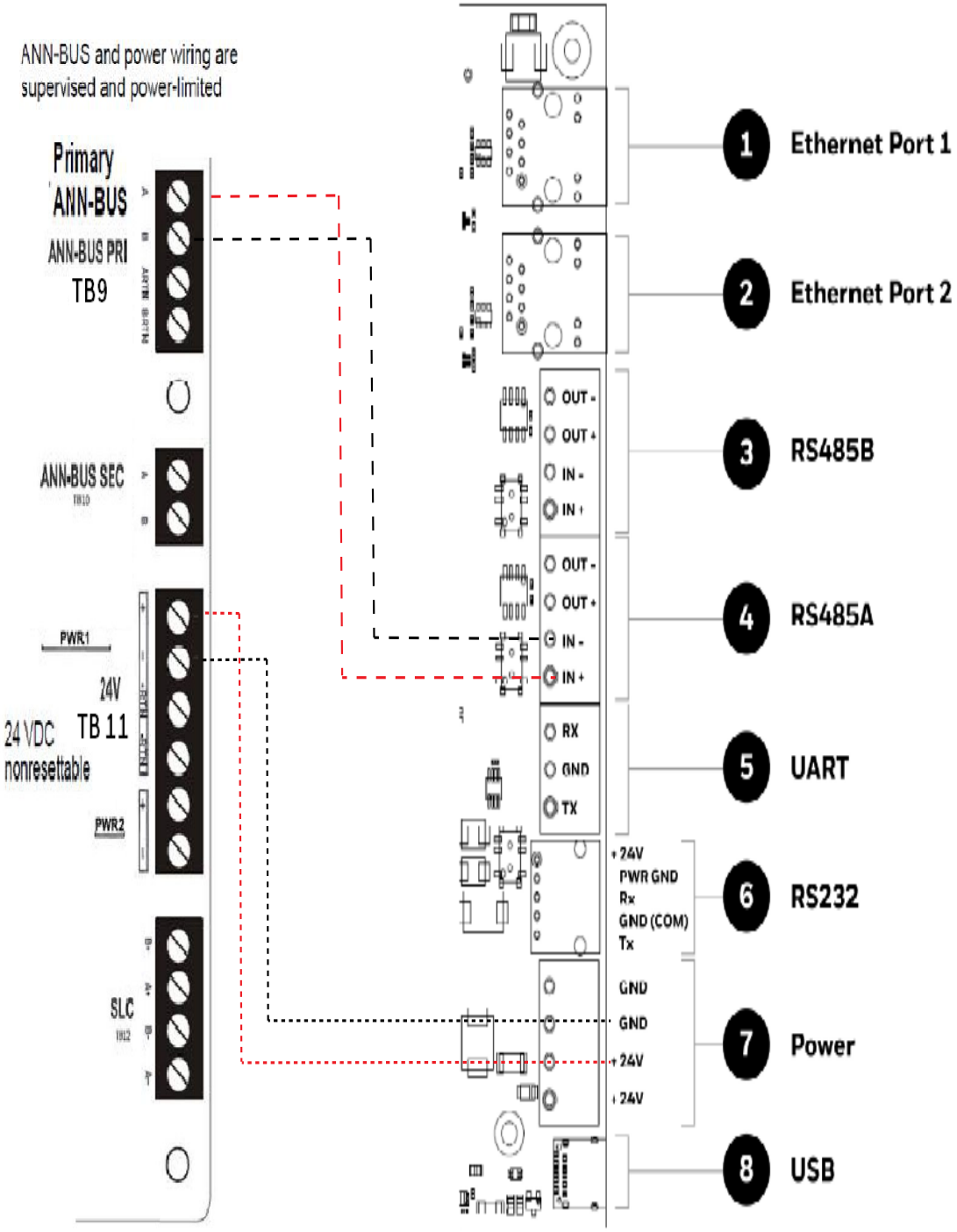

Figure C.17: FireWarden Panel: RS-485 Connections

C.7.4 Programming for Annunciator (ANN-PRI)

Programming enables the panel to recognize the CLSS gateway and the annunciator.

CAUTION: BEFORE PROGRAMMING, ENSURE THAT THE ANN-PRI COMMUNICATION CABLE IS CONNECTED WITH THE PANEL.

C.7.5 To Program for Annunciator

Using the keypad on the panel, you select options on the screens.

1. On the panel, press the **Enter** button on the keypad.
2. View the panel screen options.
3. On the keypad, press **2** to select `2 = PROGRAMMING MODE`.
4. Enter the panel's password in the `PROGRAMMING` screen.
   The default password is: 00000000
5. Press the down arrow button to select `2 = POINT PRGORAM`.
6. Select `3 = FUTURE USE` and then select `3 = ANNUNCIATORS`.
7. Select `1 = PRIMARY` on the `ANN-BUS SELECT` screen.
8. Ensure `1 = ENABLED YES` on the `ANN PRIMARY` screen.
9. Select `2 = MODULES INSTALLED`.
10. Select `1 = ADDR. 1-1 NONE` on the `ANN-BUS MODULES` screen.
11. Ensure `1 = TYPE NONE` on the `ANN-BUS MODULE 1-1` screen.
12. Press the down arrow button once to go back to the `ANN-BUS MODULE TYPE` screen.
13. Press the down arrow button to go to the next screen.
14. Select `2 = ANN-S/PG MODULE`.
15. On the keypad, press the **Esc** key three times to go back to the `ANN/BUS SELECT` screen.
16. Select `3 = ANN-BUS OPTIONS`.
17. Press `1 = ANN-S/PG OPTIONS` on the `ANN-BUS` screen.
18. Set `CLASS A` to `YES` if your ANN Bus wiring is Class A topology, otherwise set it as `NO`.
19. Ensure the following settings on the `ANN-S/PG OPTIONS` screen:

    `1 = PORT PAR`

    `2 = PRINTER SUPV YES`

    `3 = OFFLINE TIMER 0`
20. Press the **Esc** button continuously until the main screen appears.

The panel saves the changes and resets.

To Verify the Changes

It is a good practice to confirm that the panel reflects the changes you did.

1. Use the keypad and go to the `ANN-BUS MODULES` screen.
2. Check that `1 = ADDR.1-1 ANN-S/PG` on the `ANN-BUS MODULE 1-1` screen.
3. Check that no ANN primary fault is reported on the main screen.

C.7.6 To Use Panel's Printer Port Connection

Some FireWarden panels support data transfer through their printer terminal.

NOTE: Compatible CLSS Gateway firmware versions: 2.1.11.16 and above

1. **On the Gateway Side**
   - Connect the serial cable into the RS-232 port of the gateway.

   The RS-232 port is labeled as 6 in the Figure C.19.
2. **On the Panel Side**

   Connect the serial cable in the DB9 serial port of the ANN-S/PG module on the panel.

CAUTION: ENSURE THAT ONLY THE ANN-S/PG IS CONNECTED AND NOT THE CLSS GATEWAY. ONLY ONE OF THESE TWO CAN BE CONNECTED. BOTH OF THEM MUST NOT BE CONNECTED TOGETHER.

C.7.7 Power Connection

On the Gateway Side

- Connect to the 24V DC external power supply.
- Switch the S7 Switch next to the RS-232 port towards *NUP_OUT*.

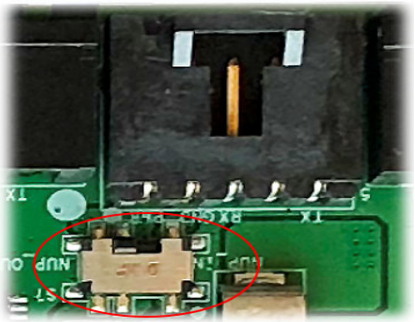

Figure C.18: The S7 Switch

On the Panel Side

Connect the power cable to a 24V DC external power source or the panel's power supply.

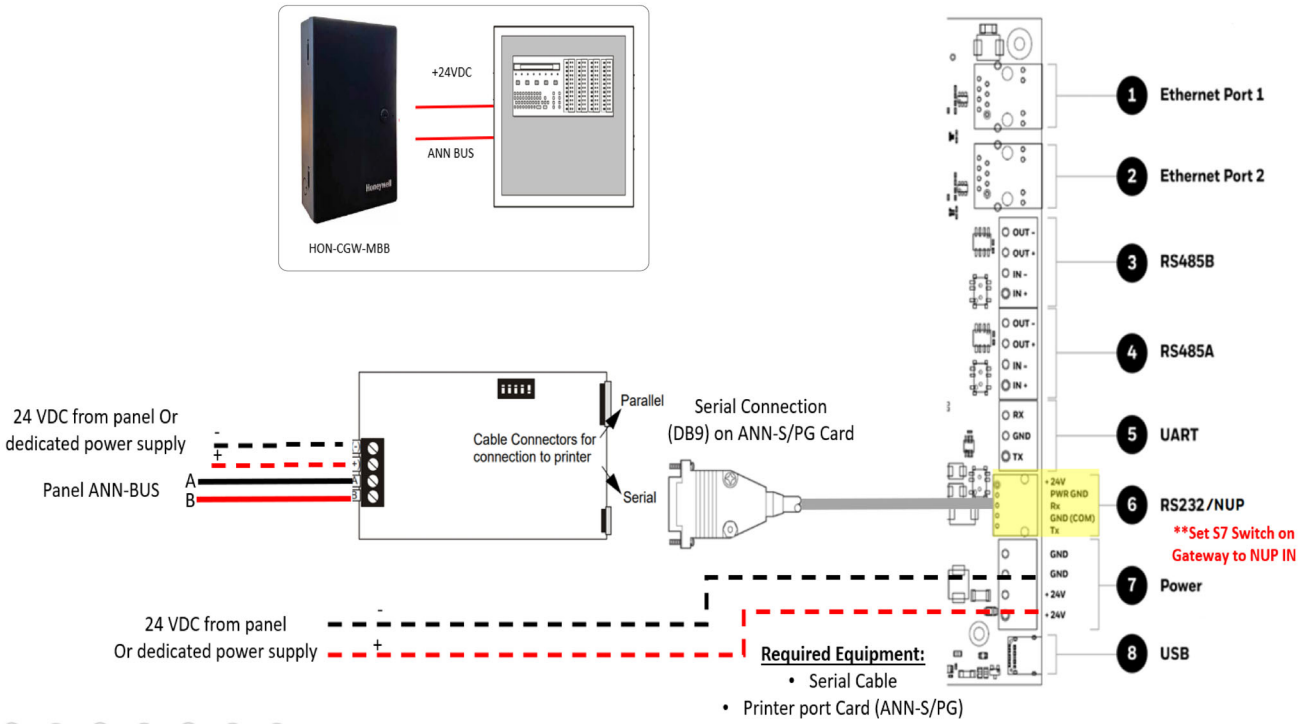

Figure C.19: FireWarden Panels: Printer Port Connections

C.8 Gamewell-FCI Panels

C.8.1 Connection Options

Each variant of the Gamewell-FCI panel offers various connection options.

The gateway operates only with the Gamewell-FCI fire alarm control panels listed in the table below:

Table C.6: Gamewell-FCI Panel Connection Options

Fire Alarm Panel Models	RS-485	UART/TTL	RS-232	USB	Ethernet
E3 Series Panels					
ILI-MB-E3	Yes	No	No	Yes	No
ILI-S-E3	No	No	No	Yes	No
ILI95-MB-E3	Yes	No	No	Yes	No
ILI95-S-E3	No	No	No	Yes	No
S3 Series Panels					
SLP-E3	Yes	No	No	Yes	Yes
INI-7100	Yes	No	No	Yes	No

CAUTION: DO NOT INSTALL DACT-E3 AND THE CLSS GATEWAY TOGETHER ON AN ILI-MB-E3 CIRCUIT BOARD OR AN ILI95-MB-E3 CIRCUIT BOARD. YOU CAN USE DACT-E3 ON A DIFFERENT NODE WITHIN THE NETWORK.

Minimum Required Versions

E3 Series: 7.00.106

S3 Series: 7.00.106

CLSS Gateway: 3.1.4.72

LCD-SLP (Display Panel): 2.12.090

NGA-K: 7.00.100

Limitation(s)

The *CLSS Gateway* only with firmware version 3.3.4.14 or above supports CAM text messages. Currently, these messages may show the *Device Type* as *Unavailable* on *Cloud-Connected Horizon*. It is planned to show this information in a future release.

Following Gamewell panel versions support the CAM text messages:

- E3 Series: 7.02.001
- S3 Series: 7.02.001
- LCD-SLP:7.01.001
- NGA-K: 7.01.001

C.8.2 To Use Panel's Printer Port Connection

Gamewell panels support data transfer through their RS-485 connection. The transferred data is stored in the *CLSS Site Manager*.

1. **On the Gateway Side**
   1. Connect the + (24 V) wire to the IN+ pin of an RS-485 port.
   2. Connect the - (GND) wire to the IN- pin of an RS-485 port.

   The RS-485 ports are labeled as 3 and 4 in the Figure C.19.

2. **On the Panel Side**
   - E3 Series Panel
   - S3 Series Panel

- **E3 Series Panel**

  At the TB3 terminal of the panel,

  - Connect the +ve wire to the TB3-1 pin.
  - Connect the -ve wire to the TB3-2 pin.

  At the TB6 terminal of the panel,

  - Connect the GND wire to the TB6-1 pin.
  - Connect the TxD wire to the TB6-2 pin.
  - Connect the SUPV wire to the TB6-3 pin.
  - Connect the RxD wire to the TB6-4 pin.

C.8.3 Power Connection

On the Gateway Side

Ensure that the power cable is connected with the power port of the gateway.

The power port is labeled as 7 in the Figure C.19.

On the Panel Side

- Connect the Red wire to the +ve pin in the TB3 port.
- Connect the Black wire to the -ve pin in the TB3 port.

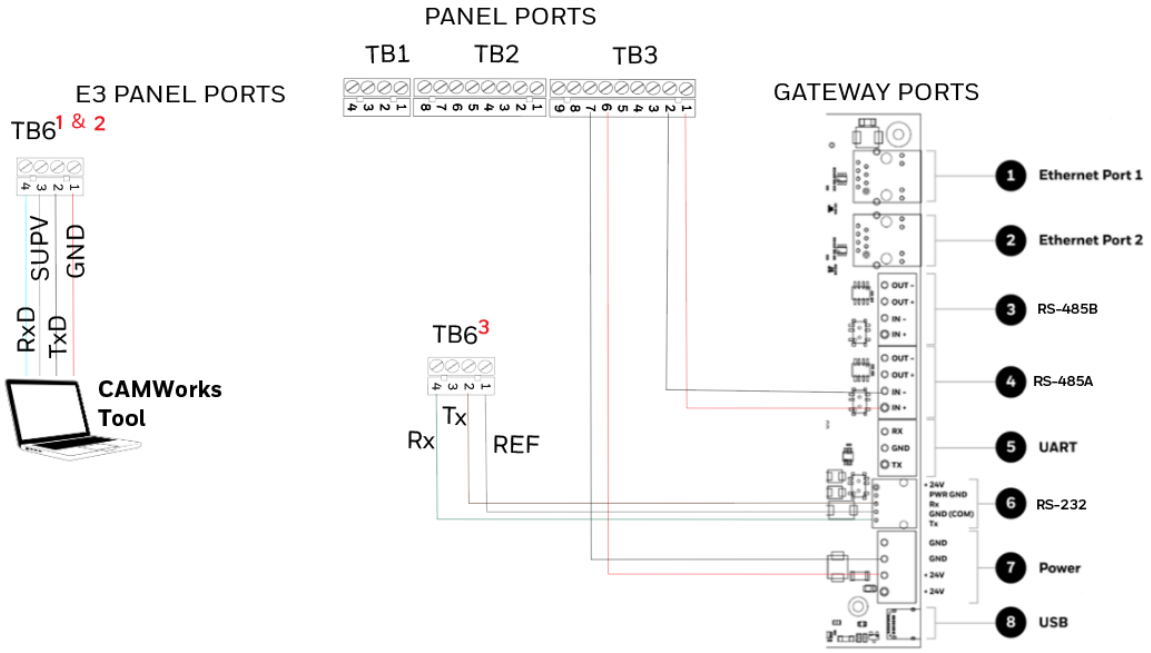

1 Disconnect the CAMWorks Tool after downloading the configuration file. Then, connect RS-232 to TB6 for Control Functionality.

2 If the computer has a serial port, connect it with the RS-232 to DB9 converter (P/N: 75267). If the computer does not have a serial port, connect the converter with the USB port of the computer.

3 Control Functionality

Figure C.20: E3 Panel: Gateway Connections

TB6 and RS-232 Connections

The pin connections are as below:

TB6 Pins	RS-232 Pins	Description
TB6-1	RS-232 GND	*For Programming*. GND connects to the **Red** lead on the download cable of P/N 75267. For Printer port, GND connects to printer DB-9 and PIN-5.
TB6-2	RS-232 TxD	*For Programming*. TxD connects to the **Black** lead on the download cable of P/N 75267. For Printer port, TxD connects to printer DB-9 and PIN-2.
TB6-3	RS-232 Supervision	For optional printer supervision. For Printer port, SUPV connects to printer DB-9 and PIN-4.
TB6-4	RS-232 RxD	*For Programming*. RxD connects to the **Green** lead on the download cable of P/N 75267. For Printer port, RxD connects to printer DB-9 and PIN-3.

- **S3 Series Panel**

  At the TB3 terminal of the panel,

  - Connect the +ve wire to the TB3-1 pin.
  - Connect the -ve wire to the TB3-2 pin.

  At the TB5 terminal of the panel,

  - Connect the GND wire to the TB5-1 pin.
  - Connect the TxD wire to the TB5-2 pin.
  - Connect the SUPV wire to the TB5-3 pin.
  - Connect the RxD wire to the TB5-4 pin.

C.8.4 Power Connection

On the Gateway Side

Ensure that the power cable is connected with the power port of the gateway.

The power port is labeled as 7 in the Figure C.19.

On the Panel Side

- Connect the Red wire to the +ve pin in the TB2 port.
- Connect the Black wire to the -ve pin in the TB2 port.

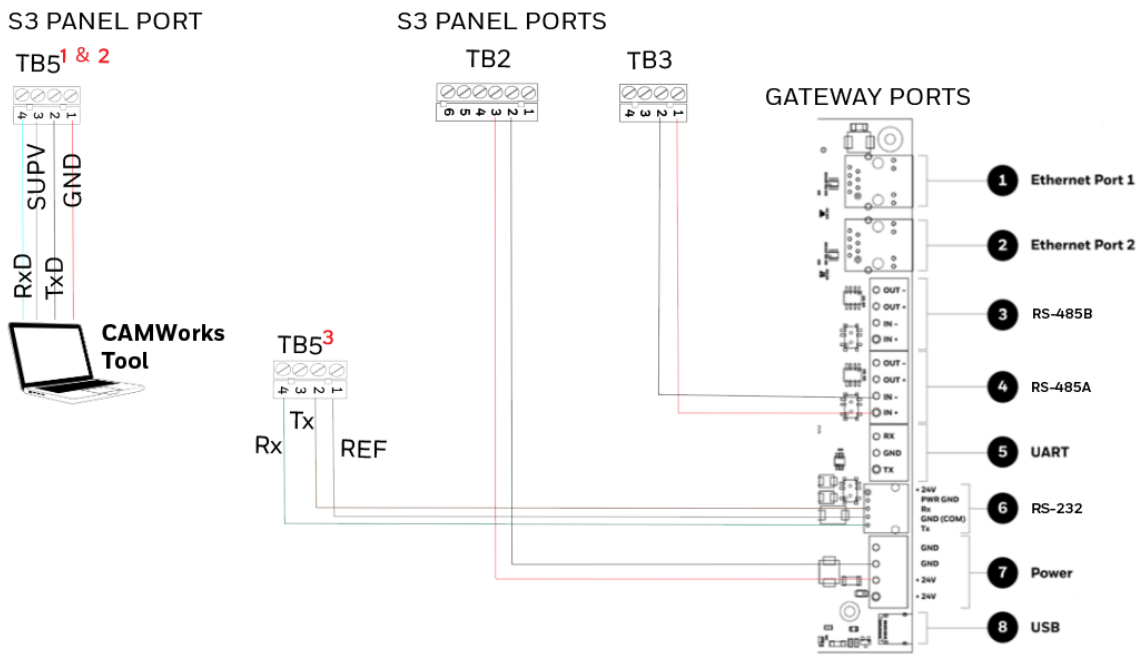

1 Disconnect the CAMWorks Tool after downloading the configuration file. Then, connect RS-232 to TB5 for Control Functionality.

2 If the computer has a serial port, connect it with the RS-232 to DB9 converter (P/N: 75267). If the computer does not have a serial port, connect the converter with the USB port of the computer.

3 Control Functionality

Figure C.21: S3 Series: Gateway Connections

TB5 and RS-232 Connections

The pin connections are as below:

TB5 Pins	RS-232 Pins	Description
TB5-1	RS-232 GND	*For Programming*. GND connects to the **Red** lead on the download cable of P/N 75267. For Printer port, GND connects to printer DB-9 and PIN-5.
TB5-2	RS-232 TxD	*For Programming*. TxD connects to the **Black** lead on the download cable of P/N 75267. For Printer port, TxD connects to printer DB-9 and PIN-2.
TB5-3	RS-232 Supervision	For optional printer supervision. For Printer port, SUPV connects to printer DB-9 and PIN-4.
TB5-4	RS-232 RxD	*For Programming*. RxD connects to the **Green** lead on the download cable of P/N 75267. For Printer port, RxD connects to printer DB-9 and PIN-3.

C.9 Gent Panels

C.9.1 Connection Options

The gateway operates only with the Gent fire alarm control panels listed in the table below:

Table C.7: Gent Panel Connection Options

Fire Alarm Panel Models	RS-485	UART/TTL	RS-232	USB
COMPACT-24-N	No	No	Yes	Yes
COMPACT-PLUS	No	No	Yes	Yes
VIGPLUS-24	No	Yes	Yes[1]	Yes
VIGPLUS-72	No	Yes	Yes[1]	Yes
VIG1-24	No	Yes	Yes[1]	Yes
VIG1-72	No	Yes	Yes[1]	Yes

1 Use the add-on I/O card (VIG-IOC-DOM) on the panel.

NOTE: The add-on I/O card (VIG-IOC-DOM) is ordered separately.

C.9.2 Compact Series Panels

For a fixed gateway we recommend using the RS-232 connection. For a portable gateway, we recommend using the USB connection.

To Use a RS-232 Connection

Certain Gent panel variants can directly communicate through the RS-232 connection.

1. **On the Gateway Side**

   Connect the RS-232 cable with pre-formed connector to the RS-232 port of the gateway board.

   The RS-232 port is labeled as 6 in the Figure C.2.

2. **On the Panel Side**

   - The baud rate should be 19200.

   At the PB6 terminal of the panel,

   - Connect the White wire to a Rx1 or Rx2 pin.
   - Connect the Brown wire to a Tx1 or Tx2 pin.
   - Connect the Green wire to the 0V pin.

NOTE: Connect either the Tx1 and Rx1 *or* the Tx2 and Rx2.

NOTE: If Tx1 and Rx1 are connected, select the Port 1 settings in the panel for communication. If Tx2 and Rx2 are connected, select the Port 2 settings in the panel for communication.

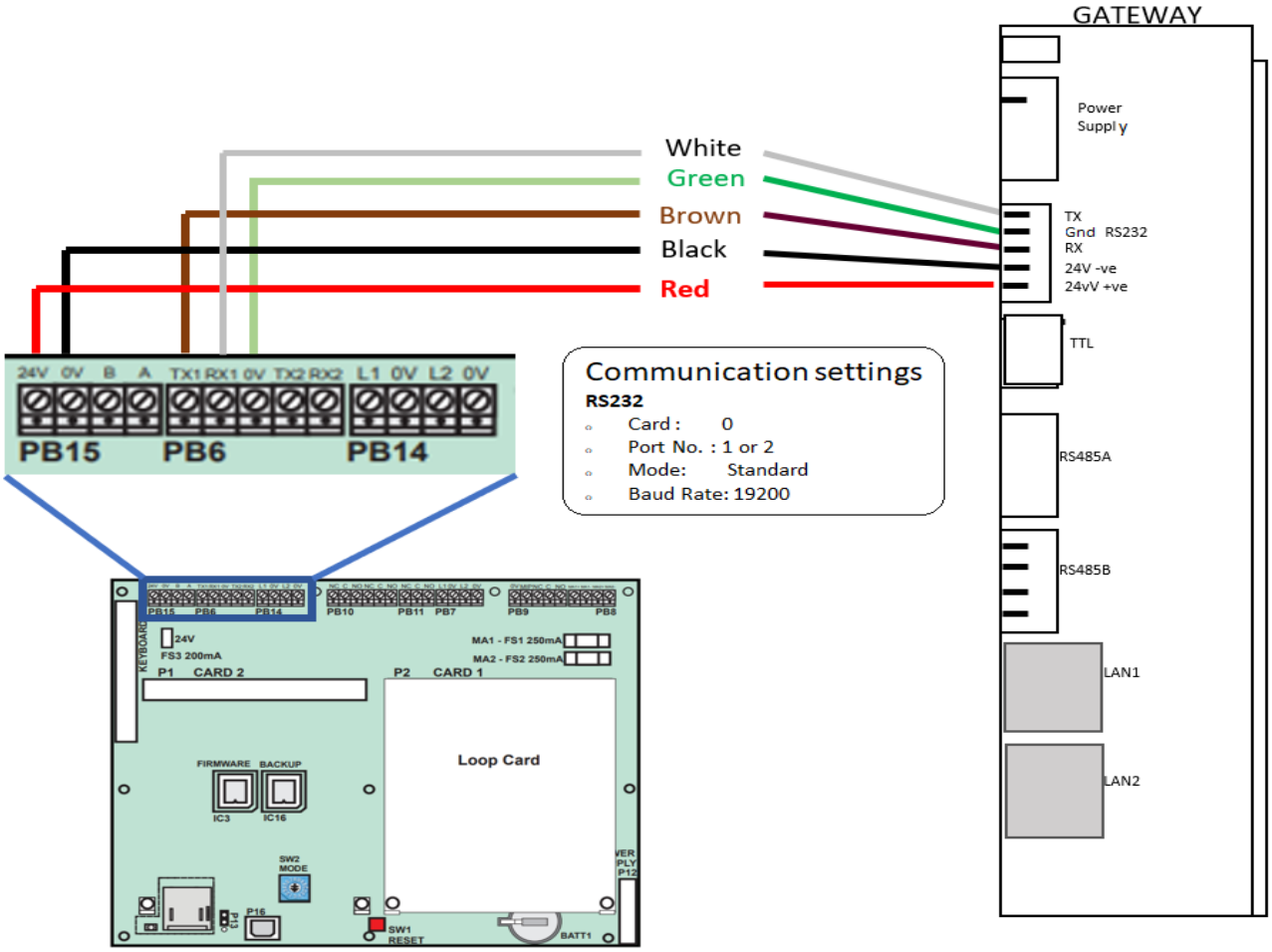

Figure C.22: COMPACT Panels: RS-232 Connections on the PB6 Terminal

C.9.3 Power Connection

On the Gateway Side

1. Ensure that the RS-232 cable is connected with the RS-232 port of the gateway.
2. Ensure that the S7 switch next to the RS-232 port is switched towards *NUP_IN.*

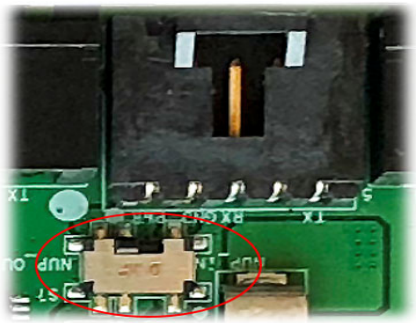

Figure C.23: The S7 Switch

On the Panel Side

At the PB15 terminal of the panel,

- Connect the Red wire (+ve) to the +24V pin.
- Connect the Black wire (-ve) to the 0V pin.

To Use a USB Connection

1. On the Gateway Side

Connect the USB-C side of the cable to the USB port of the gateway.

The USB port is labeled as 8 in the figure Figure C.2.

2. On the Panel Side

Connect the USB-B side of the cable to the USB port of the panel.

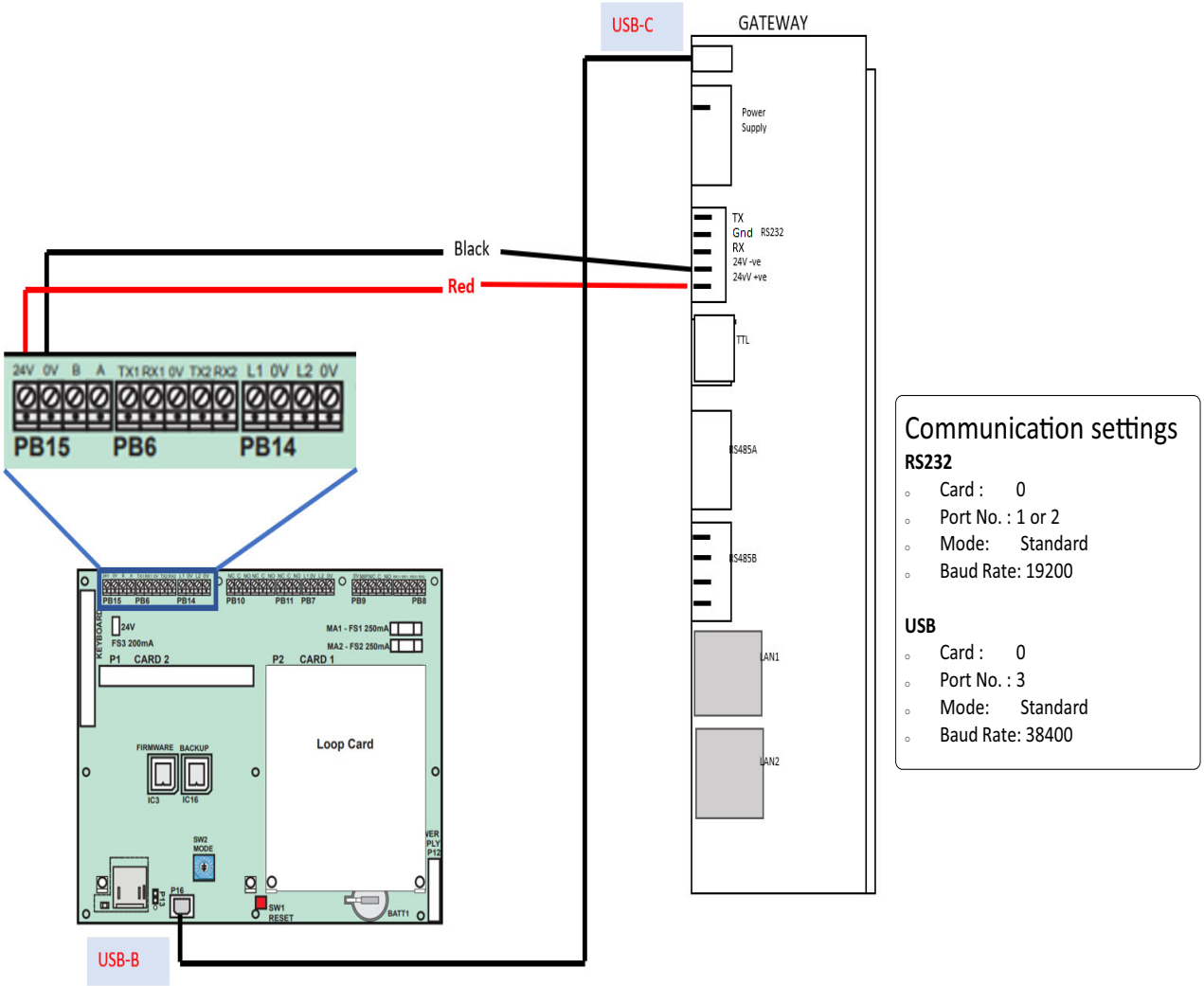

Figure C.24: Compact Panels: USB Connection

C.9.4 Power Connection

In the PB15 terminal on the panel,

Connect the gateway to a 24V DC internal power source of the panel.

NOTE: The external power supply must be dedicated and not shared with any other devices.

NOTE: The panel's power supply to the gateway must be within +24V DC power.

C.9.5 Vigilon Series Panels

For a fixed gateway, we recommend using a UART/TTL connection. If it is not available, use a RS-232 connection.

To Use a UART/TTL Connection

1. On the Gateway Side

Connect the male UART/TTL cable to the Rx (Red), Gnd (Silver), and Tx (White) UART/TTL terminals of the gateway.

The UART/TTL port is labeled as 5 in Figure C.2.

2. On the Panel Side

1. Within the panel, find the backplane PCB board (see Figure C.25).
2. Connect the 3.5mm phono socket to the P11 connector on the panel's PCB.

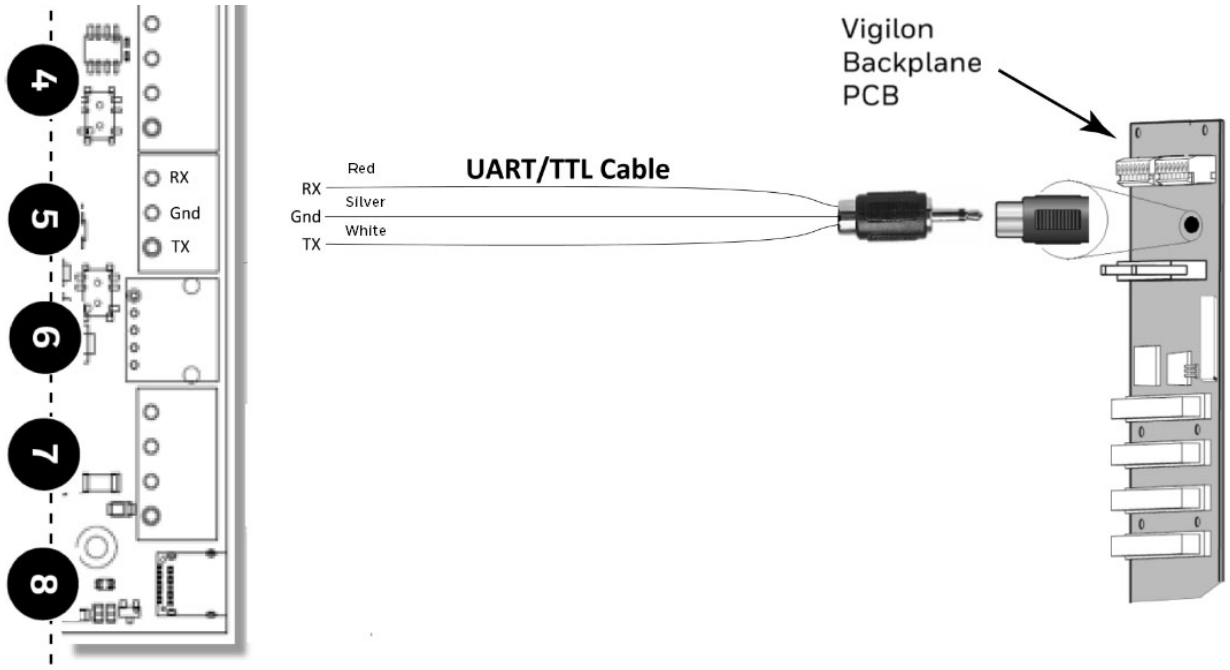

Figure C.25: Vigilon Panels: UART/TTL Connection

C.9.6 Power Connection

On the Gateway Side

Connect the power cable to a 24V DC external power source.

NOTE: The external power supply must be dedicated and not shared with any other devices.

NOTE: The panel's power supply to the gateway must be within +24V DC power.

To Use an RS-232 Port via an I/O Card

Using an add-on I/O card (VIG-IOC-DOM), certain Vigilon panel variants can communicate with the CLSS Gateway.

- The I/O card has a rotary switch, which should point to 5.
- The baud rate of the I/O card should be 19200.

1. **On the Gateway Side**
   1. Connect the RS-232 cable to the RS-232 port of the gateway.

      The RS-232 port is labeled as 6 in the Figure C.2.

2. **On the Panel Side**
   1. Inside the panel enclosure, find the backplane PCB board.
   2. Insert the I/O card into the P2 Card 15.

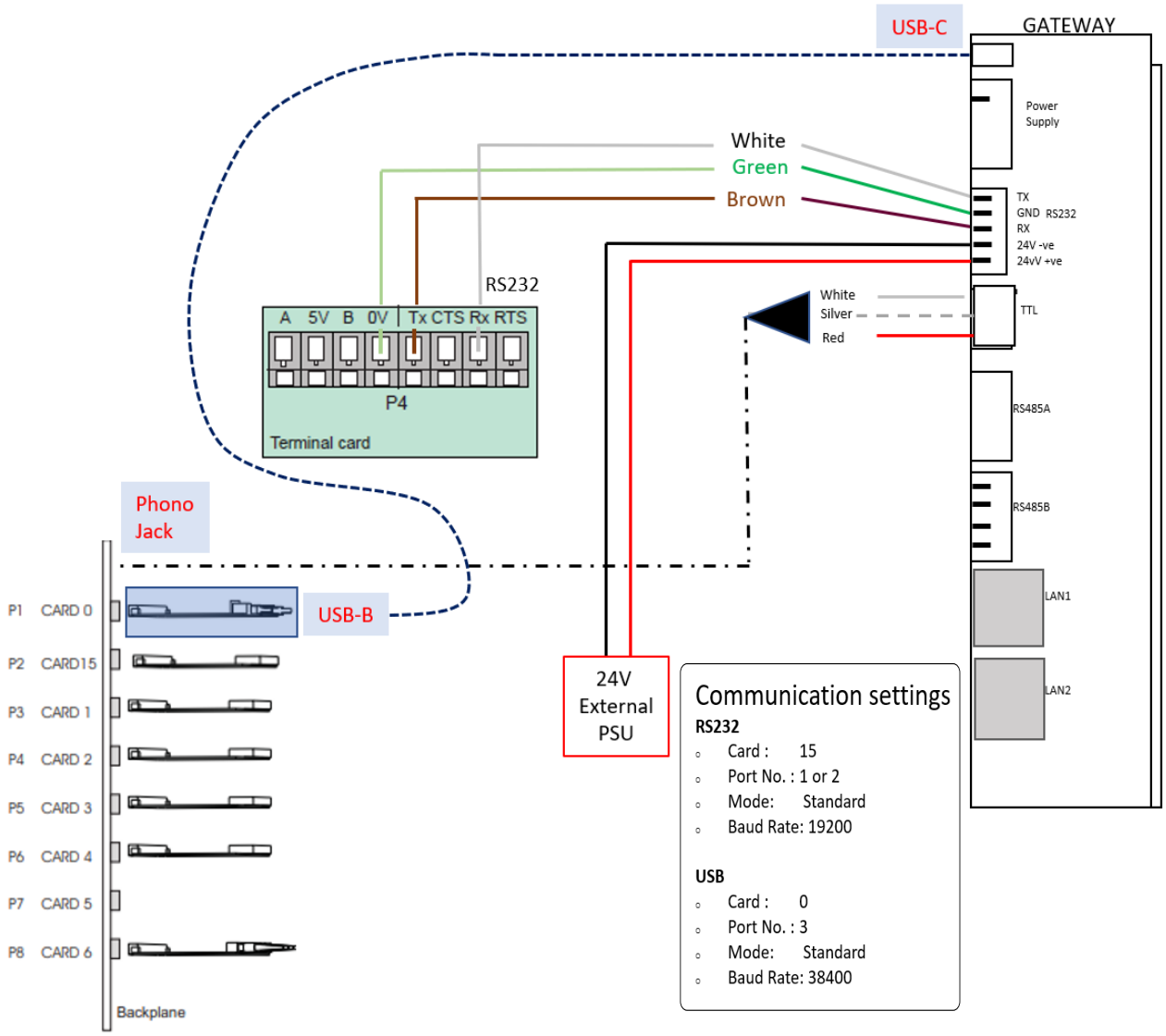

Figure C.26: Vigilon Panels: I/O Card Connection

For the P2 Card 15-Connected I/O Card:

1. In the panel, find the RS-485/RS-232 (P4) connectors on the main control board.
2. Connect the RS-232 cable to the Tx (Brown), Rx (White), and 0V (Green) terminals of the RS-485/RS-232 (P4) connectors.

C.9.7 Power Connection

NOTE: The external power supply must be dedicated and not shared with any other devices.

NOTE: The panel's power supply to the gateway must be within +24V DC power.

On the Gateway Side

1. Connect to the 24V DC external power supply.
2. Ensure that the S7 switch next to the RS-232 port is switched towards *NUP_OUT.*

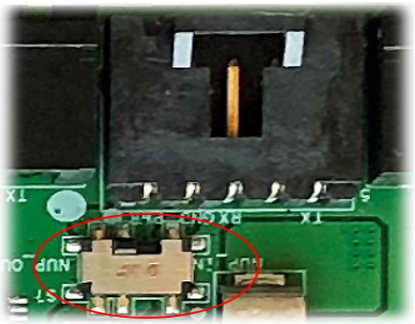

Figure C.27: The S7 Switch

On the Panel Side

Connect the power cable into the 24V DC external power supply.

To Use a USB Connection

1. On the Gateway Side

Connect the USB-C side of the cable to the USB port of the gateway.

The USB port is labeled as 8 in the figure Figure C.2.

2. On the Panel Side

In the MCC card on the panel:

Connect the USB-B side of the cable. Refer to the figure Figure C.26.

C.9.8 Power Connection

Connect the gateway to a 24V DC external power source.

NOTE: The external power supply must be dedicated and not shared with any other devices.

NOTE: The panel's power supply to the gateway must be within +24V DC power.

C.10 Morley-IAS Panels

C.10.1 Connection Options

The gateway operates only with the Morley-IAS fire alarm control panels listed in the table below:

Table C.8: Morley-IAS European Panel Connection Options

Fire Alarm Panel Models	RS-485	UART/TTL	RS-232	USB
DXc	No	No	Yes[1]	No

1 Use the serial communication card (P/N: 795-122) on the panel.

NOTE: Compatible CLSS Gateway firmware versions: 3.0.2.30 and above.

C.10.2 To Use an RS-232 Connection

Morley-IAS panel variants use an RS-232 connection with the CLSS Gateway.

1. **On the Gateway Side**
   1. Connect the RS-232 cable with pre-formed connector to the RS-232 port of the gateway board.

   The RS-232 port is labeled as 6 in the Figure C.2.

2. **On the Panel Side**
   - Morley DXc Panels

NOTE: In a network of panels, connect the gateway to the master panel.

- **Morley DXc Panels**

In the SK1 terminal of the panel:

- Connect the White wire to the RxD+ pin.
- Connect the Green wire to the Gnd pin.
- Connect the Brown wire to the TxD+ pin.

C.10.3 Power Connection

The gateway's RS-232 port can receive its power either from an external power source or from the non-resettable internal power of the panel.

NOTE: The external power supply must be dedicated and not shared with any other devices.

NOTE: The panel's power supply to the gateway must be within +24V DC power.

For the External Power Supply:

On the Gateway Side

1. Connect to the 24V DC external power supply or to the panel's 24V DC power port.
2. Ensure that the S7 switch next to the RS-232 port is switched towards *NUP_OUT.*

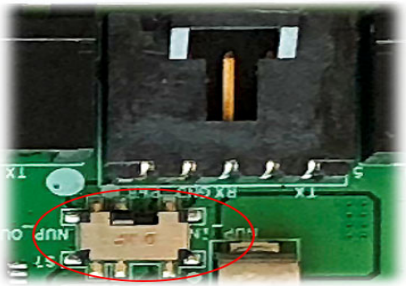

Figure C.28: The S7 Switch

On the Panel Side

In the SK4 or SK5 terminal,

Connect the RS-232 cable for the non-resettable internal power.

C.11 NOTIFIER® UL

C.11.1 Connection Options

The gateway operates only with the NOTIFIER fire alarm control panels listed in the table below:

Table C.9: NOTIFIER UL Panel Connection Options

Fire Alarm Panel Models	RS-485	UART/TTL	NUP	USB
ONYX Panels				
NFS-320	No	No	Yes	No
NFS2-640	No	No	Yes	No
NFS2-3030	No	No	Yes	No
INSPIRE Panels				
N16E	No	No	Yes	No
N16X	No	No	Yes	No

C.11.2 To Use a NUP Connection

Some NOTIFIER panel variants use a NUP connection with the CLSS Gateway.

On the Gateway Side

Connect the NUP cable to the NUP port of the gateway board.

The NUP port is labeled as 6 in the Figure C.29.

On the Panel Side

In the NUP socket of the panel:

- Stand-alone Panel: Connect the NUP cable.

Direct Connection with the Panel

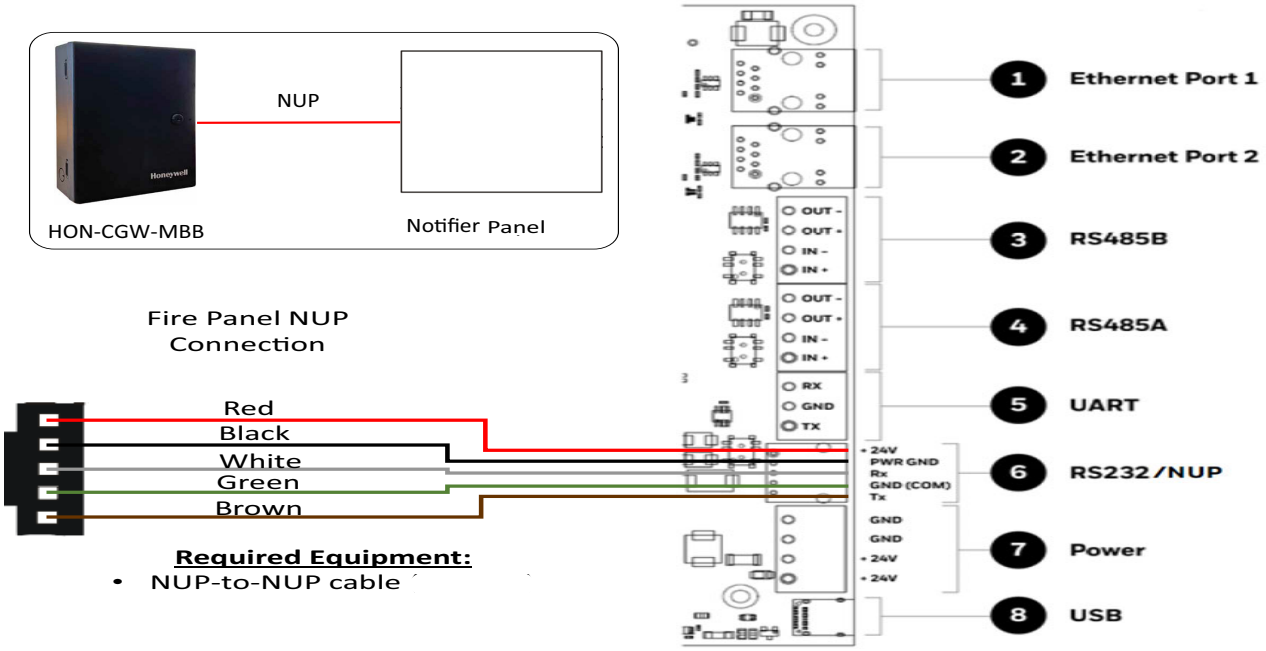

Figure C.29: Stand-alone Panel: NUP Connection

Connection through an NCM Card

Using required network cards the gateway can connect to a Standard-speed Network of Panels or High-speed Network of Panels.

■ Standard-speed Network of Panels

Add an additional standard NCM card to the panel for the gateway connection.

NOTE: For the standard-speed network, each device should have its NCM card on the panel with an available port.

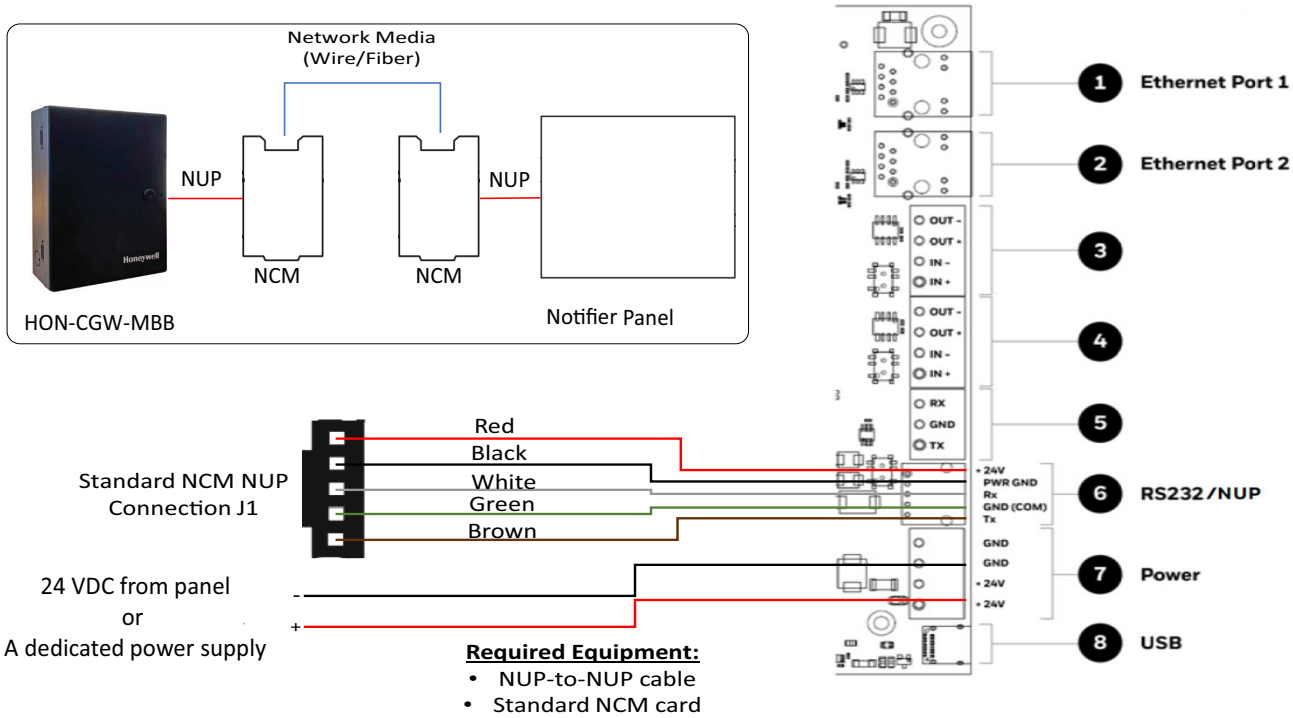

Figure C.30: Standard-speed Network Panel: NUP Connection

■ High-speed Network of Panels

Connect the NUP cable into an open NUP port of the HS-NCM card on the panel. If no NUP port is available, an additional HS-NCM card must be added and connected.

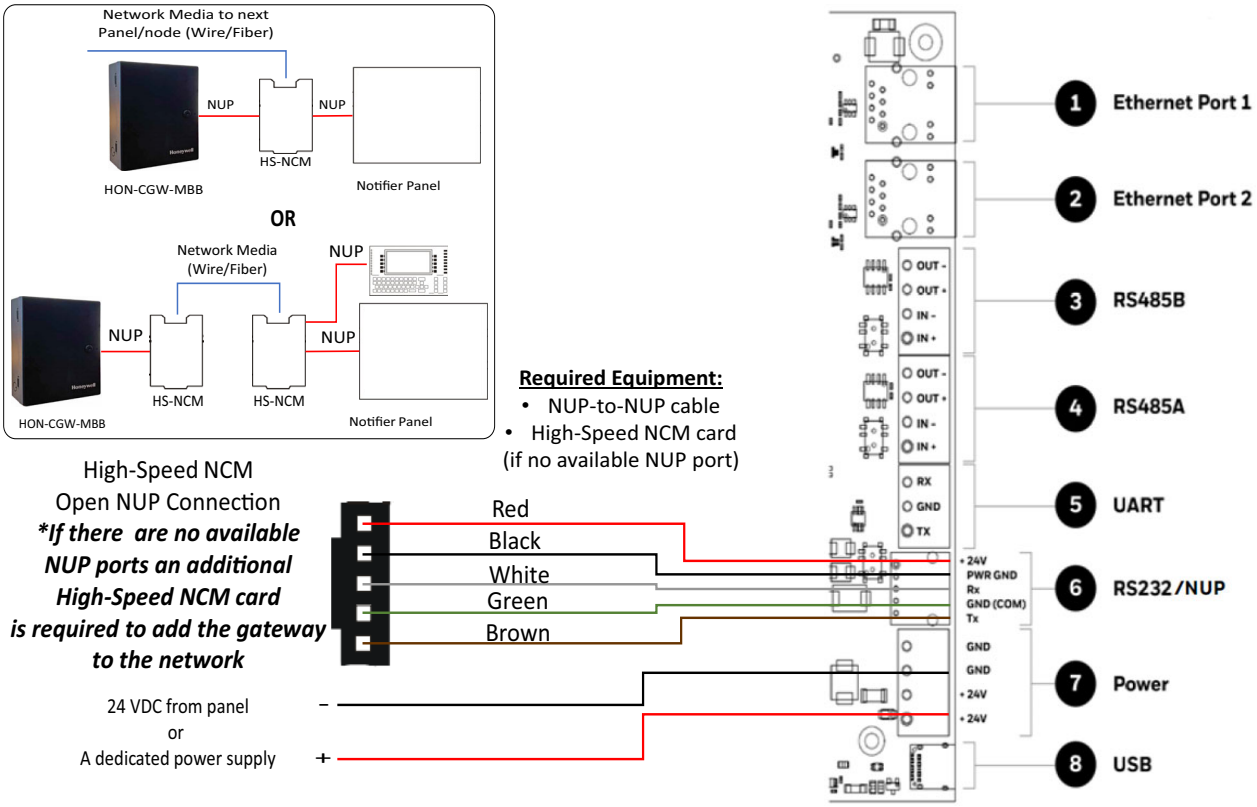

Figure C.31: High-speed Network Panel: NUP Connection

Connection through a DVC Card

Connect the NUP port of the gateway and the DVC with a NUP cable. Then, connect the NUP port of the DVC and the panel.

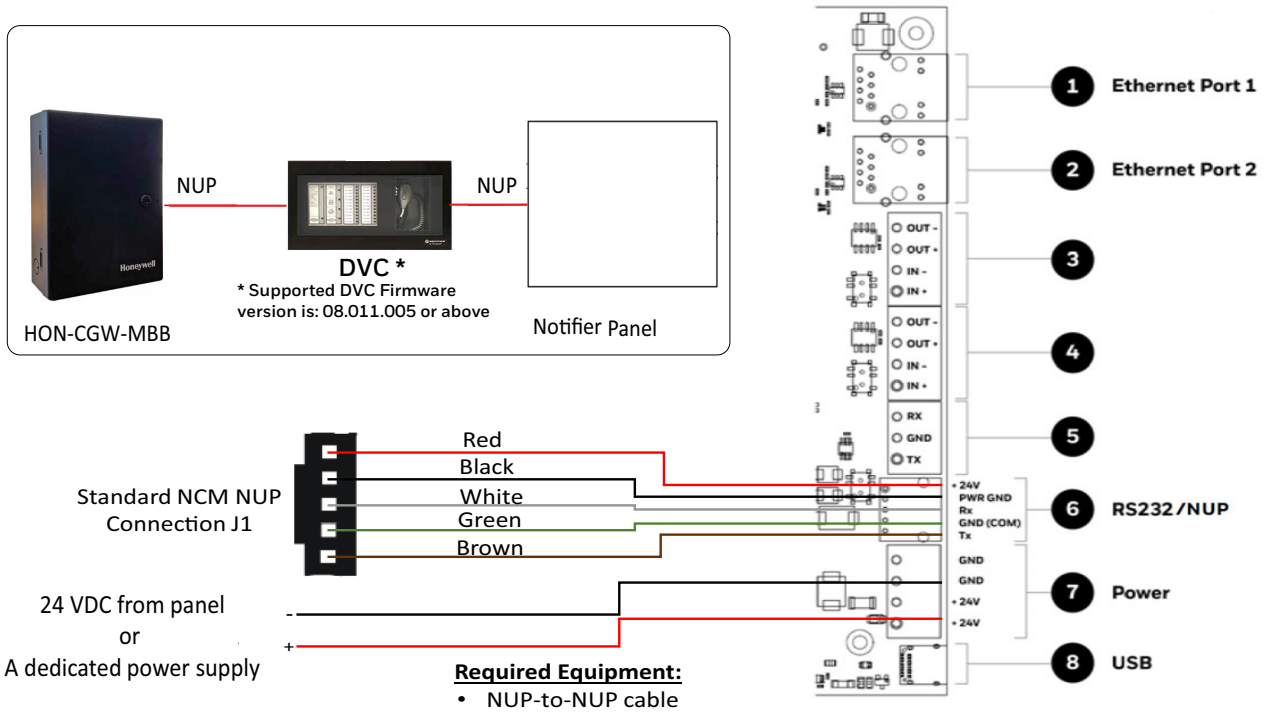

Figure C.32: Gateway Connection to Panel via DVC

■ N16 or NFS2-3030: Disconnection Messages

Disconnection Between the Gateway and the DVC	
Panel Message	[*GW_NODE_NUMBER*] OFF NETWORK
Central Station Message	[*DVC_NODE_NUMBER*] COMMUNICATION LOSTOR [*FIRE PANEL_NODE_NUMBER*] COMMUNICATION LOST NETWORK MODULE COMMUNICATION LOST

Disconnection Between the Gateway and the DVC	
Panel Message	[*DVC_NODE_NUMBER*] COMMUNICATION LOST
Central Station Message	[*FIRE PANEL_NODE_NUMBER*] COMMUNICATION LOST

Disconnection Between the Gateway, DVC, and the Panel		
Panel Message		
Central Station Message		
	DVC COMMUNICATION LOST	[*FIRE PANEL_NODE_NUMBER*] COMMUNICATION LOST NETWORK MODULE COMMUNICATION LOST

C.11.3 Power Connection

NOTE: The external power supply must be dedicated and not shared with any other devices.

NOTE: The panel's power supply to the gateway must be within +24V DC power.

On the Gateway Side

- Stand-alone Panel:
  - Ensure that the NUP cable is connected with the NUP port of the gateway.
  - Find the S7 switch next to the NUP port, and switch it towards *NUP_IN*.

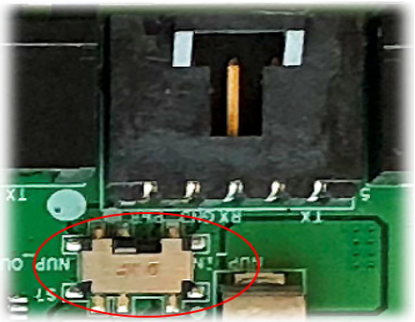

Figure C.33: The S7 Switch

- High-speed or standard-speed network of panels:
  - Connect to the +24V external power source or to the internal power supply of the panel.
  - To power the HS-NCM or NCM over NUP from the gateway:
    Find the S7 switch next to the NUP port, and switch it towards *NUP_OUT*.

On the Panel Side

- Stand-alone Panel: Ensure that the NUP cable is connected with the NUP port (J1) of the panel.
- Network of Panels: Connect to a +24V external power source or to the panel's power supply port.

C.12 NOTIFIER® European Panels (EN)

C.12.1 Connection Options

The gateway operates only with the NOTIFIER fire alarm control panels listed in the table below:

Table C.10: NOTIFIER European Panel Connection Options

Fire Alarm Panel Models	RS-485	UART/TTL	NUP (RS-232)	USB
Pearl	Yes	No	Yes[1]	No
ID3000	No	No	Yes[2]	No

1 Use the serial communication card (P/N: 124-426) on the panel.
2 Use the serial communication card (P/N: 124-300) on the panel.

NOTE: Compatible CLSS Gateway firmware versions: 3.0.2.30 and above.

C.12.2 To Use a NUP Connection

Some NOTIFIER EN panel variants use a NUP connection with the CLSS Gateway.

1. **On the Gateway Side**

   Connect the NUP cable with a pre-formed connector to the NUP port of the gateway board.

   Refer to Figure C.2 where the NUP port is labeled as 6. It is the P7 pin on the gateway board.

2. **On the Panel Side**

   - Pearl Panel
   - ID3000 Panel

   Pearl Panel

   In the TB2 terminal at the communication card on the panel:

   - Connect the White wire to the RxD+ pin.
   - Connect the Green wire to the Gnd pin.
   - Connect the Brown wire to the TxD+ pin.

   ID3000 Panel

   In the SK1 terminal at the communication card on the panel:

   - Connect the White wire to the RxD+ pin.
   - Connect the Green wire to the Gnd pin.
   - Connect the Brown wire to the TxD+ pin.

   OR

   At the RS232/FT35 terminal of the panel:

   - Connect the White wire to RxD pin.
   - Connect the Green wire to GND pin.
   - Connect the Brown wire to TxD pin.

NOTE: The RS232/FT35 is a diagnostic port, which also supports data transmission between the panel and the gateway.

C.12.3 To Use an RS-485 Connection

Some NOTIFIER panel variants use an RS-485 connection with the CLSS Gateway.

NOTE: Only a standalone panel can have an RS-485 connection.

1. **On the Gateway Side**
   - Connect +ve wire to RS485 IN+ port.
   - Connect -ve wire to RS485 IN- port.

   Refer to Figure C.2 where the RS-485B and RS-485A ports are labeled as 3 and 4. They are the P5 and P1 pins on the gateway board.
2. **On the Panel Side**
   - Pearl Panel

   Pearl Panel

   At the TB6 terminal of the panel's board:

   - Connect the +ve wire to the A pin.
   - Connect the -ve wire to the B pin.

C.12.4 Power Connection

The gateway can receive its power either from an external power source or from the non-resettable internal power of the panel.For the External Power Supply:

NOTE: The external power supply must be dedicated and not shared with any other devices.

NOTE: The panel's power supply to the gateway must be within +24V DC power.

On the Gateway Side

1. Connect to the 24V DC external power supply or to the panel's 24V DC power port.
2. Ensure that the S7 switch next to the RS-232 port is switched towards *NUP_OUT.*

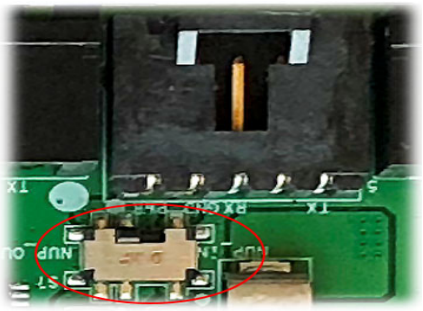

Figure C.34: The S7 Switch

On the Panel Side

- Pearl Panels: At the TB7 terminal of the panel's board:
  - Connect the +ve wire to the +ve pin.
  - Connect the -ve wire to the -ve pin.

- ID3000 Panels: At the SK4 terminal of the panel's board:
  - Connect the +ve wire to the +ve pin.
  - Connect the -ve wire to the -ve pin.

External Power Supply

Use this option if the gateway is *not* receiving the power from the panel.

- On the Gateway Side

  Connect to the power port of the gateway.

  Refer to Figure C.2 where the power port on the gateway is labeled as 7. It is the P2 pin on the gateway board.

- On the External Power Supply Side

  Connect to the 24V DC external power supply.

C.13 Silent Knight Panels

C.13.1 Connection Options

The gateway operates only with the Silent Knight fire alarm control panels listed in the table below:

Table C.11: Silent Knight Panel Connection Options

Fire Alarm Panel Models	RS-485	UART/TTL	RS-232	USB
006700	Yes	No	No	No
006808	Yes	No	No	No
6820	Yes	No	No	No
6820EVS	Yes	No	No	No

CAUTION: WHEN SUPPORTING THE ALARM TRANSMISSION, IT IS RECOMMENDED THAT THE SILENT KNIGHT PANEL SHOULD USE SECONDARY ANN BUS CHANNEL WITH CLASS A WIRING. IF THE ALARM TRANSMISSION SERVICE IS *NOT* USED, THE PANEL CAN USE EITHER THE PRIMARY OR THE SECONDARY ANN BUS CHANNEL FOR THE CLSS GATEWAY CONNECTION.

Minimum Required Versions

For the Panel: 6.05.01

For the CLSS Gateway: 3.1.4.74

C.13.2 To Use an RS-485 Connection

Using an RS-485 cable the CLSS Gateway connects with the annunciator primary terminal of the panel.

CAUTION: CONNECT EITHER THE CLSS GATEWAY OR THE ANN S/P G MODULE WITH THE PANEL. BOTH OF THEM SHOULD NOT BE CONNECTED TOGETHER WITH THE PANEL.

1. **On the Gateway Side**

   At the RS-485 A port in the gateway board:

   - Connect the A connector to the IN+ pin of the RS-485 A port.
   - Connect the B connector to the IN- pin of the same RS-485 A port.

   The RS-485 ports in the gateway board are labeled as 3 and 4 in the Figure C.2.

2. **On the Panel Side**

   At the S-BUS board in the ANN-BUS PRI terminal:

   - Connect the RS-485 +ve wire to the A port.
   - Connect the RS-485 -ve wire to the B port.

C.13.3 Power Connection

On the Gateway Side

In the power supply port (labeled 7 in the Figure C.2):

- Connect the Red wire to the +24V pin.
- Connect the Black wire to the Gnd pin.

On the Panel Side

In the power board of the panel:

- Connect the Red wire to the +ve pin.
- Connect the Black wire to the -ve pin.

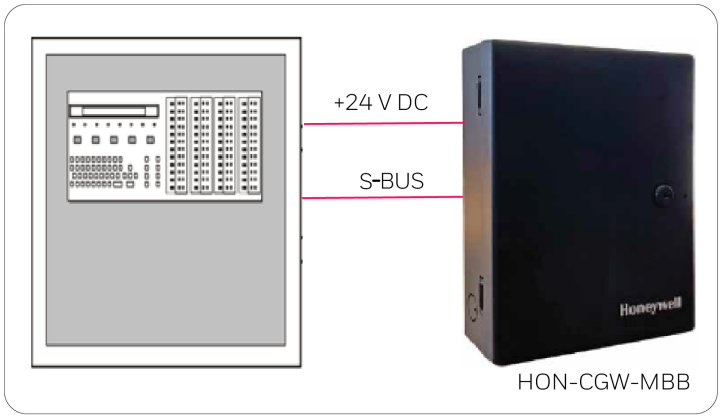

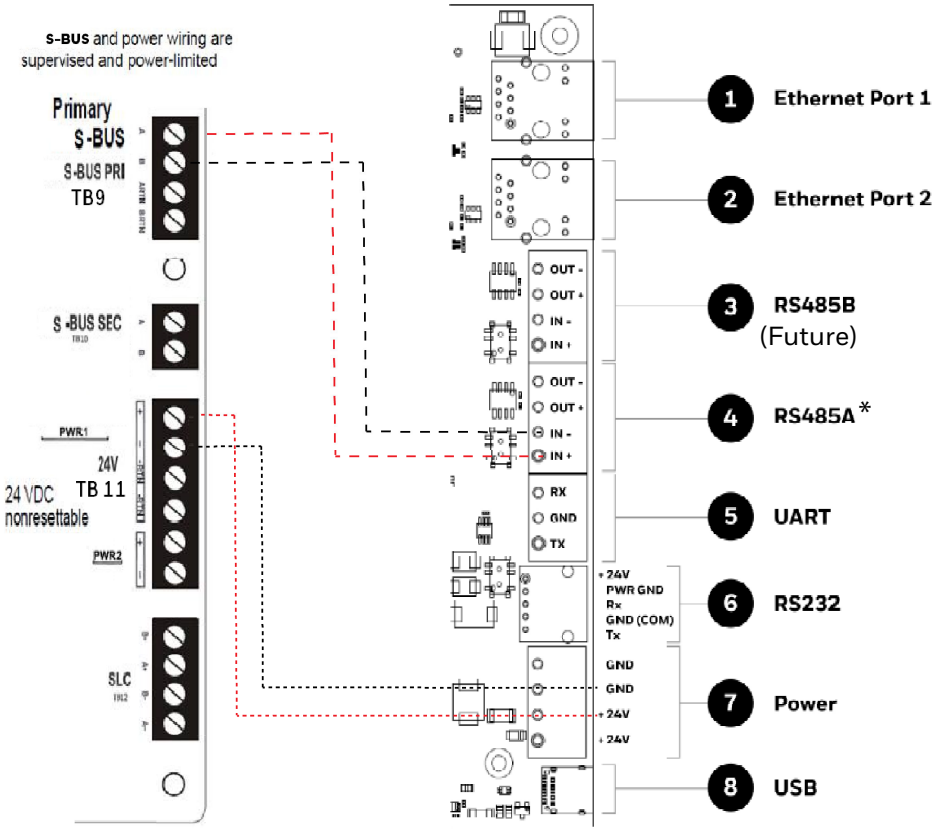

(* For panel connection, use only the RS-485A port)

Figure C.35: Silent Knight Panel: RS-485 Connections

C.13.4 Programming for Annunciator (ANN-PRI)

Programming enables the panel to recognize the CLSS gateway and the annunciator.

CAUTION: BEFORE PROGRAMMING, ENSURE THAT THE ANN-PRI COMMUNICATION CABLE IS CONNECTED WITH THE PANEL.

C.13.5 To Program for Annunciator

Using the keypad on the panel, you select options on the screens.

1. On the panel, press the **Enter** button on the keypad.
2. View the panel screen options.
3. On the keypad, press **7** to select `7 = PROGRAMMING MODE`.
4. Enter the panel's password in the `PROGRAMMING` screen.
   The default password is: 00000000
5. Select the panel connected with the gateway, if it is a standalone panel.

   OR

   Navigate in the list of panels and select the panel connected with the gateway if it is a multi-panel network.
6. Select `1 = MODULE`.
7. Select `2 = ADD MODULE`.
8. Select the module of the gateway from the list.
9. Select the module type.
10. Select `1 = EDIT MODULE` to enter the module details.
11. Provide the **Module ID** details.
12. Navigate to next menu.
13. Select `Output Port = PARALLEL`.
14. Select `Event Logging = YES`.
15. Navigate to next menu.
16. Select `Baud Rate = 19200`.
17. Keep the default values for other fields.
18. Review the entered details.
19. Save the changes.

C.14 Triga Panels

C.14.1 Connection Options

The gateway operates only with the Triga fire alarm control panels listed in the table below:

Table C.12: Triga Panel Connection Options

Fire Alarm Panel Models	RS-485	UART/TTL	RS-232	USB
TR-75R	Yes	No	No	No
TR-75B	Yes	No	No	No
TR-2100R	Yes	No	No	No
TR-2100B	Yes	No	No	No
TR-R2100R	Yes	No	No	No
TR-R2100B	Yes	No	No	No
TR-2100ECSR	Yes	No	No	No
TR-2100ECSB	Yes	No	No	No

CAUTION: WHEN SUPPORTING THE ALARM TRANSMISSION, IT IS RECOMMENDED THAT THE TRIGA PANEL SHOULD USE SECONDARY ANN BUS CHANNEL WITH CLASS A WIRING.
IF THE ALARM TRANSMISSION SERVICE IS *NOT* USED, THE PANEL CAN USE EITHER THE PRIMARY OR THE SECONDARY ANN BUS CHANNEL FOR THE CLSS GATEWAY CONNECTION.

Minimum Required Versions

For the Panel: 6.05.01

For the CLSS Gateway: 3.1.4.74

C.14.2 To Use an RS-485 Connection

Using an RS-485 cable the CLSS Gateway connects with the annunciator primary terminal of the panel.

CAUTION: CONNECT EITHER THE CLSS GATEWAY OR THE ANN S/P G MODULE WITH THE PANEL. BOTH OF THEM SHOULD NOT BE CONNECTED TOGETHER WITH THE PANEL.

1. **On the Gateway Side**

   At the RS-485 A port in the gateway board:

   - Connect the A connector to the IN+ pin of the RS-485 A port.
   - Connect the B connector to the IN- pin of the same RS-485 A port.

   The RS-485 ports in the gateway board are labeled as 3 and 4 in the Figure C.2.

2. **On the Panel Side**

   At the S-BUS board in the ANN-BUS PRI terminal:

   - Connect the RS-485 +ve wire to the A port.
   - Connect the RS-485 -ve wire to the B port.

C.14.3 Power Connection

On the Gateway Side

In the power supply port (labeled 7 in the Figure C.2):

- Connect the Red wire to the +24V pin.
- Connect the Black wire to the Gnd pin.

On the Panel Side

In the power board of the panel:

- Connect the Red wire to the +ve pin.
- Connect the Black wire to the -ve pin.

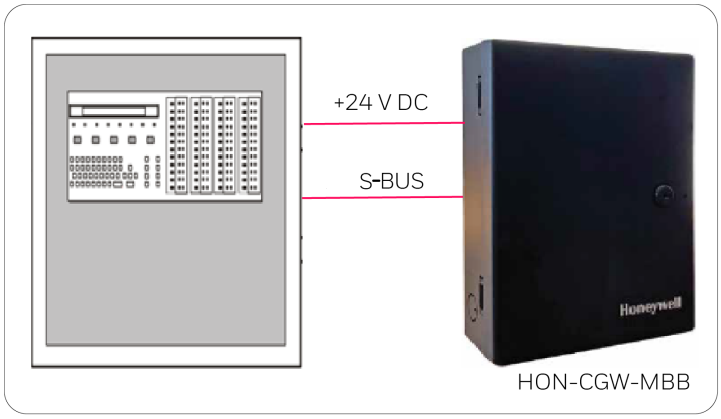

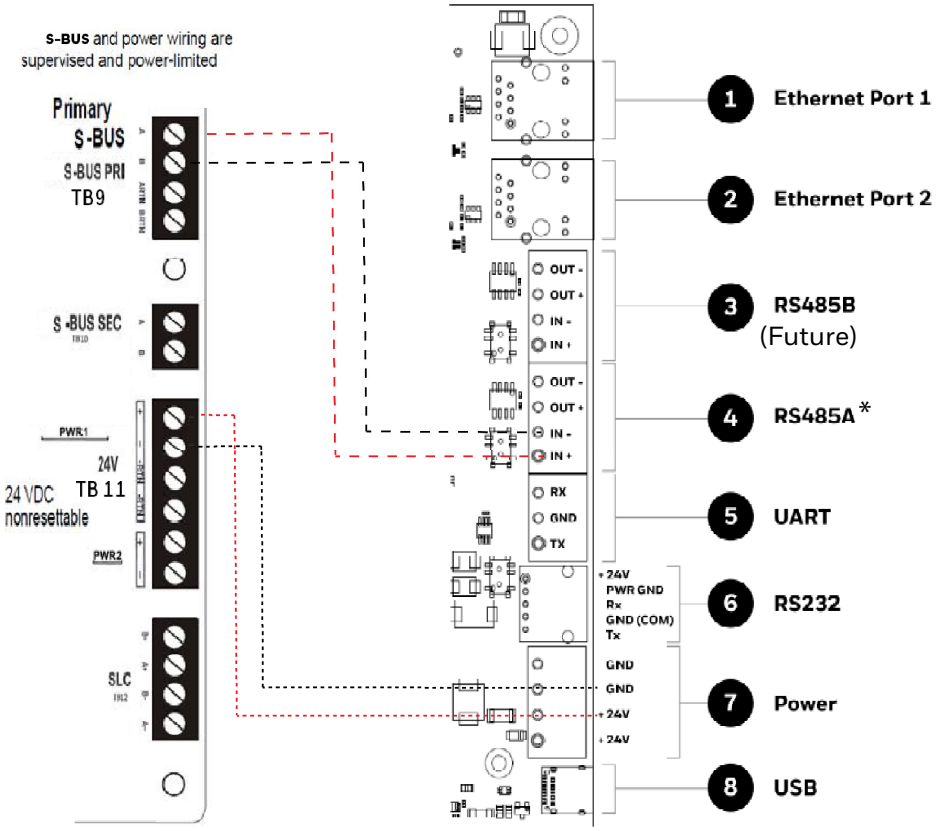

(* For panel connection, use only the RS-485A port)

Figure C.36: Triga Panel: RS-485 Connections

C.14.4 Programming for Annunciator (ANN-PRI)

Programming enables the panel to recognize the CLSS gateway and the annunciator.

CAUTION: BEFORE PROGRAMMING, ENSURE THAT THE ANN-PRI COMMUNICATION CABLE IS CONNECTED WITH THE PANEL.

C.14.5 To Program for Annunciator

Using the keypad on the panel, you select options on the screens.

1. On the panel, press the **Enter** button on the keypad.
2. View the panel screen options.
3. On the keypad, press **7** to select `7 = PROGRAMMING MODE`.
4. Enter the panel's password in the `PROGRAMMING` screen.
   The default password is: 00000000
5. Select the panel connected with the gateway, if it is a standalone panel.

   OR

   Navigate in the list of panels and select the panel connected with the gateway if it is a multi-panel network.
6. Select `1 = MODULE`.
7. Select `2 = ADD MODULE`.
8. Select the module of the gateway from the list.
9. Select the module type.
10. Select `1 = EDIT MODULE` to enter the module details.
11. Provide the **Module ID** details.
12. Navigate to next menu.
13. Select `Output Port = PARALLEL`.
14. Select `Event Logging = YES`.
15. Navigate to next menu.
16. Select `Baud Rate = 19200`.
17. Keep the default values for other fields.
18. Review the entered details.
19. Save the changes.

C.15 VESDA® Detectors

C.15.1 Connection Options

The gateway operates with VESDA detectors and sends alarm data to users.

Minimum Required Versions

For VESDA-E: All VESDA-E detector versions

For the CLSS Gateway: 3.3.4.12

C.15.2 To Use an Ethernet Connection

Using an Ethernet cable the CLSS Gateway and the VESDA detectors are connected.

NOTE: The CLSS Gateway can connect with a VESDA-E detector or a VESDA Detector Connector.

CAUTION: THE CLSS GATEWAY USES A HOST IP ADDRESS, WHICH IS THE SUBSEQUENT NEXT ADDRESS OF THE VESDA-E DETECTOR'S HOST IP ADDRESS. FOR EXAMPLE, IF THE VESDA DETECTOR IP ADDRESS IS 192.168.10.*69*, THEN THE CLSS GATEWAY WOULD AUTOMATICALLY HAVE THE IP ADDRESS 192.168.10.*70*. THEREFORE, DO NOT ASSIGN THE NEXT HOST IP ADDRESS TO ANY OTHER DEVICES IN THE NETWORK.

Before Connecting

1. In the Configuration Computer:
   1. Install the VSC Tool (with a valid license) on the Configuration Computer.
   2. Connect the USB ports of the Configuration Computer and the detector with a Type B cable.
2. In the detector:
   - Using the VSC Tool, configure the respective parameters, including the authentication password.
   - Using the VSC Tool, create a connection profile for Ethernet.
   - If detector connector is used, ensure that the detectors are connected with the detector connector.
3. In the CLSS Gateway: Ensure that the gateway is connected with *CLSS Site Manager* via Ethernet or Wireless.

1. On the Gateway Side

Connect the Ethernet cable to the Ethernet port 2 of the gateway.

Refer to Figure C.2 where it is labeled as the Ethernet Port 2. It is the J3 pin on the gateway board.

2. On the Detector Side

Connect the Ethernet cable to the Ethernet port of the detector.

C.15.3 Power Connection

The gateway can receive the 24V DC power from an external power supply.

NOTE: The detector's power supply to the gateway must be within +24V DC power.

WARNING: ENSURE THAT THE BATTERY BACKUP CAPACITY OF A CONNECTED SMOKE DETECTOR IS CORRECTLY CALCULATED. POWER THAT THE GATEWAY ALSO WOULD CONSUME SHOULD BE CONSIDERED IN THE CALCULATION.

On the Gateway Side

- Connect the Red wire to the +ve pin of the power supply port.
- Connect the Black wire to the -ve pin of the power supply port.

External Power Supply

- On the Gateway Side

  Connect to the power port of the gateway.

  Refer to Figure C.2 where the power port on the gateway is labeled as 7. It is the P2 pin on the gateway board.

- On the External Power Supply Side

  Connect to the 24V DC external power supply.

Appendix D: Compatible Cellular Modules

The cellular modules offer value-added services for mobile devices connected with the CLSS Gateway.

Figure D.1: A Cellular Module

To know about installing this device onto the gateway, refer to 4.3.2, "Installing a Cellular Module".

D.1 Operation

The cellular modules are plug-and-play devices, which receive power from the CLSS Gateway and provide a cellular communication path.

D.2 Supported Modules

Table C.1: Modules and Frequencies

Brand Name	Verizon Cellular Module	AT&T Cellular Module	EU - Cellular Module
Module Name	CCM-VZ-HON	CCM-ATT-HON	CCM-EU
Model	LE910-SV1	LE910B1-NA	LE910-EU1
Supported Regions	North America	North America	Europe
Frequency Details			
4G bands (MHz)	• B2 (1900) • B4 (AWS1700) • B13 (700)	• B2 (1900) • B4 (AWS1700) • B5 (850) • B12/B13 (700)	• B1 (2100) • B3 (1800) • B7 (2600) • B8 (900) • B20 (800)
3G bands (MHz)	-	• B2 (1900) • B5 (850)	-
2G bands (MHz)	-	-	B3 (1800) B8 (900)

D.3 Standards and Codes

RED Directive 2014/53/EU

- Health and Safety of the User
- Electromagnetic Compatibility
- Effective use of spectrum allocated

D.4 Approvals

Supported cellular module details are below:

Model: CCM-ATT-HON
Region: USA
Contains FCC ID: RI7LE910NAV2
Contains IC: 5131A-LE910NAV2

Model: CCM-VZ-HON
Region: USA
Contains FCC ID: RI7LE910SVV2
Contains IC: 5131A-LE910SVV2

Model: CCM-EU
Region: Europe
R&TTE/GCF

Appendix E: LAN-Connected CLSS Horizon

The *LAN-Connected CLSS Horizon* is a monitoring-only workstation, which allows multiple users to monitor their buildings, one or more networks, and life-safety systems.

When connected with a *CLSS Gateway* using an Ethernet LAN, the *CLSS Horizon* receives events from the gateway's fire panels and shows them on a PC. Its display is GUI (Graphical User Interface).

NOTE: The connection to the mobile device is wireless or cellular.

E.1 Functionality

The *LAN-Connected CLSS Horizon* translates the protocols and facilitates communications between a workstation and the connected FACPs, NFN network, or high-speed NFN network; to protocols used by the workstation.

E.2 CLSS Horizon Topology

1. Connect an Ethernet cable to the first Ethernet port (Eth1) of the gateway. The Ethernet port is labeled as 1 in Figure E.2.
2. Connect the other end of the Ethernet cable to the Computer running the *CLSS Horizon* application.

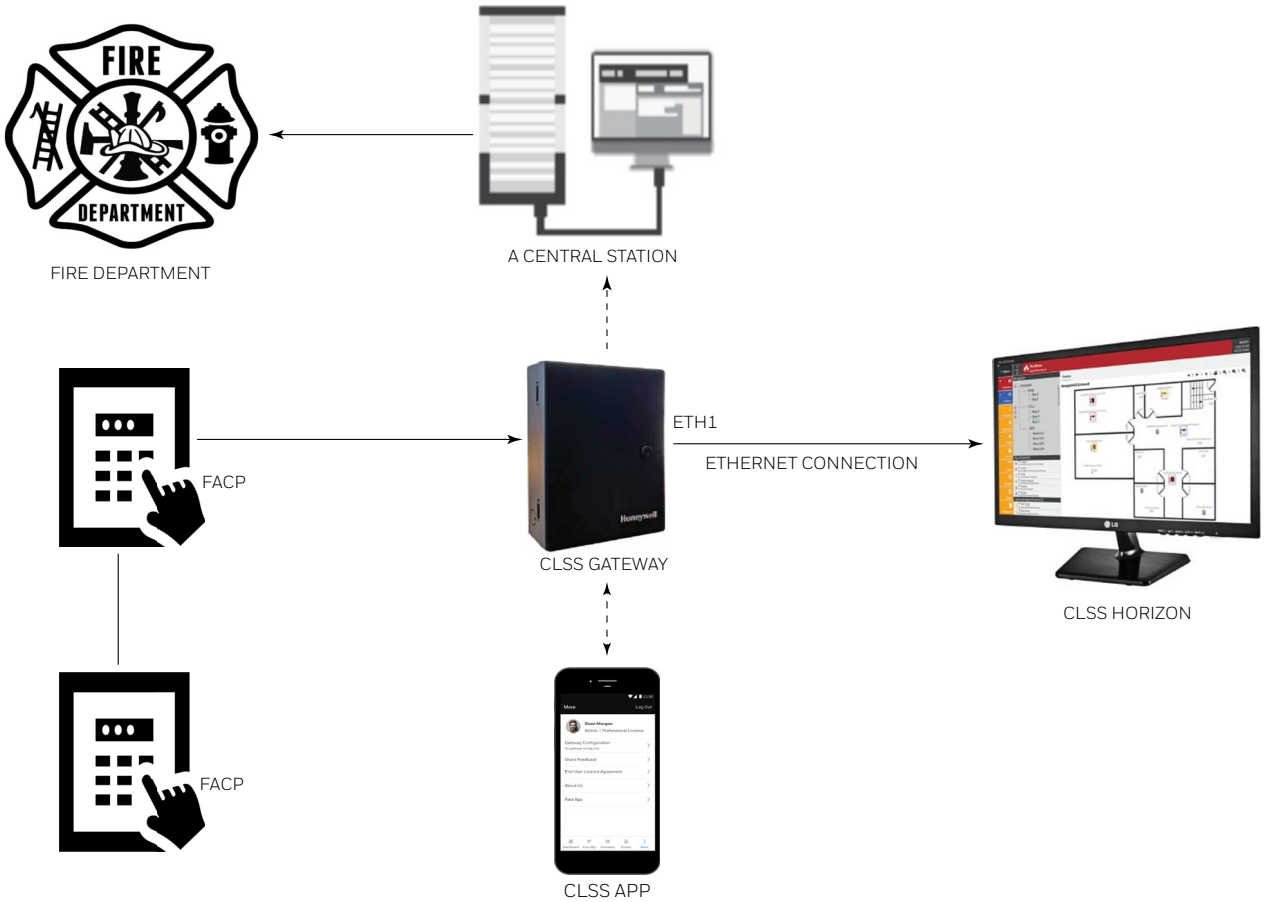

Figure E.1: LAN-Connected CLSS Horizon

E.3 IP Requirements

E.3.1 IP Port Settings

The following IP ports must be available for the CLSS Gateway:

Table E.1: Required IP Ports

Port	Type	Direction	Purpose
53	UDP and TCP	Out	DNS Resolution
80	TCP	In	Web Based Configuration
123	UDP	Out	SNTP
443	TCP	In/Out	HTTPS Communications
2017	TCP	In	Connection from Workstation (Events and Commands)
4016	TCP	In	Upgrades
5100	TCP	5100	Voice Paging

E.3.2 IP Restrictions for the Gateway

- Must have a static IP address
- Following are not supported:
  - DHCP
  - Web access through an HTTP proxy server
  - Use of a NAT (Network Address Translation)

E.4 Compatible Equipment

The CLSS Gateway is compatible with the following equipment:

Table E.2: Compatible Equipment List

Type	Equipment
Fire Panels	• N16 (INSPIRE) • NFS-320 • NFS2-640 • NFS2-3030
Network Cards	• NCM-F • NCM-W • HS-NCM-MF • HS-NCM-MFSF • HS-NCM-SF • HS-NCM-W-2 • HS-NCM-WMF-2 • HS-NCM-WSF-2

E.5 Connecting the LAN-Connected Horizon

1. At the CLSS Gateway side, connect an Ethernet cable to Ethernet Port 1.
2. At the LAN-Connected Horizon side, connect the other end of the Ethernet cable to the Ethernet port.

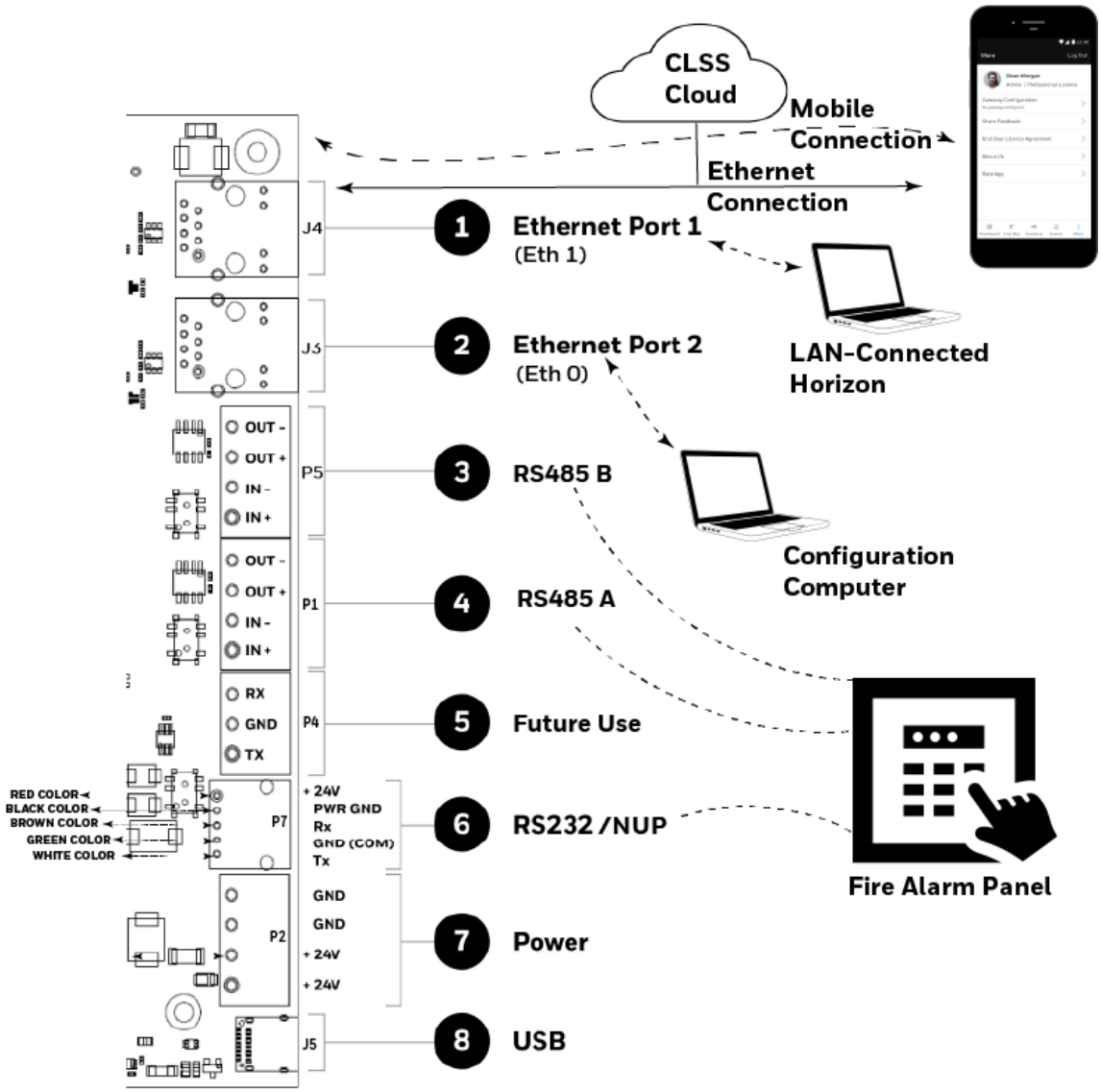

Figure E.2: Connections to the LAN-Connected Horizon

E.6 Configuration Settings

You can configure the Ethernet settings either using the *CLSS* App or the *CLSS Gateway Configuration Tool*.

E.6.1 To Configure Using the CLSS App

You install a fixed gateway when the gateway is not connected to the Internet.

1. Log into the *CLSS* App.
2. Tap the three dots at the top right on the dashboard.
3. Tap **Install Fixed Gateway**.
4. Select the Customer and then the Building.
5. Wait for the App to discover the gateway.
6. Pair with the discovered gateway.
7. Go to the **Configuration** tab.
8. Tap **CONFIGURE** at the *Ethernet (ETH1)*.

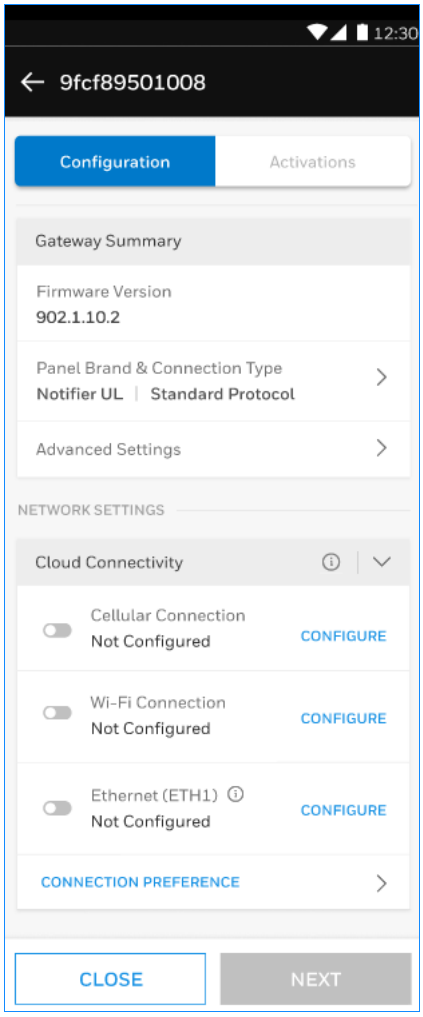

9. Provide the static IP address and other details in the **SETTINGS** page.
10. Tap **APPLY** and then tap **CONTINUE**.
11. Read the confirmation message and tap **YES, CONTINUE**.
12. Tap **NEXT**.
13. Wait for the panel connection success message.
14. Tap **+ADD ACTIVATION** in the **Activations** tab.

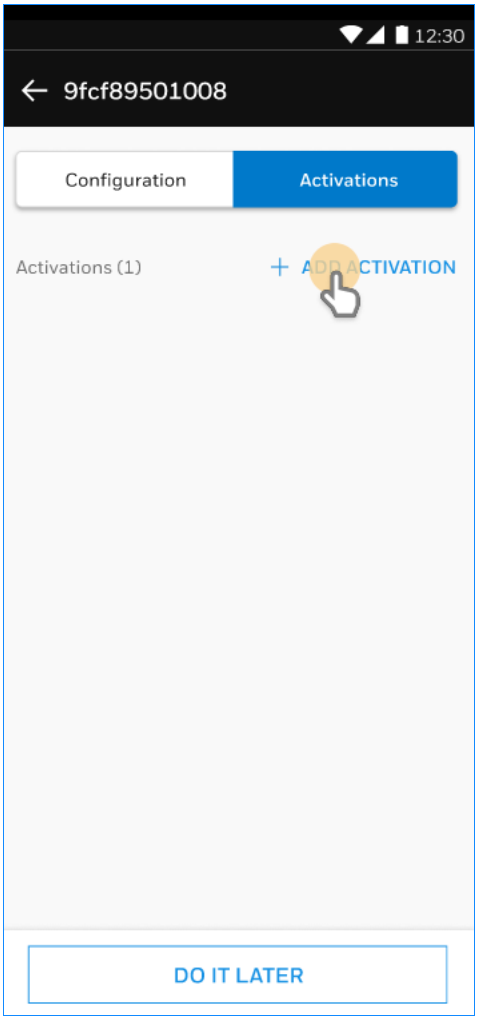

15. Find and select **LAN Connected Horizon** and **LAN Connected Horizon Panel Support**.
16. Read the informational message and tap **OKAY, GOT IT**.
17. Tap **ACTIVATE**.
18. Read the activation confirmation details and tap **CONFIRM**.
19. Wait for the activation success message.

E.6.2 To Configure Using the Configuration Tool

The laptop or computer connected to the gateway for configuring is known as the *Configuration Computer*. It is recommended to connect the *Configuration Computer* always directly to the gateway board.

1. Connect an Ethernet cable to the second Ethernet port (Eth0) of the gateway.
   The port is labeled as 2 in Figure E.2.
2. Connect the other end of the Ethernet cable to the configuration computer's Ethernet port.
3. Ensure that your configuration computer's IP is in the range of 192.168.10.xxx
4. On the gateway board, find the S6 button.
   To find the S6 button, refer to the figure "Printed Circuit Board: Layout" on page 16.
5. Press the S6 button until the LED indicator DL3 turns ON, indicating enabled configuration mode.

6. Open the Chrome browser and enter the following IP address of the configuration tool:
   https://192.168.10.190:9443/config/index.html

NOTE: As the gateway comes with a self-signed certificate, the Chrome browser may warn that the connection is not private. You can proceed with the connection and configure the gateway.

7. If the Chrome browser warns about the connection, click **Advanced** and then click **Proceed to 192.168.10.190 (unsafe)**.
8. In the login page, enter the given password.
   The default password is: *Welcome123*
9. Click **SIGN IN**.
10. On the first login, the gateway mandates a password change. Change the password.
11. In the **Gateway Settings** section, enter the gateway-related values, and then click **SAVE**.
12. Scroll down to **Network Settings**, and in the **ETHERNET 1 SETTINGS** section, provide the static IP address details and then click **SAVE**.

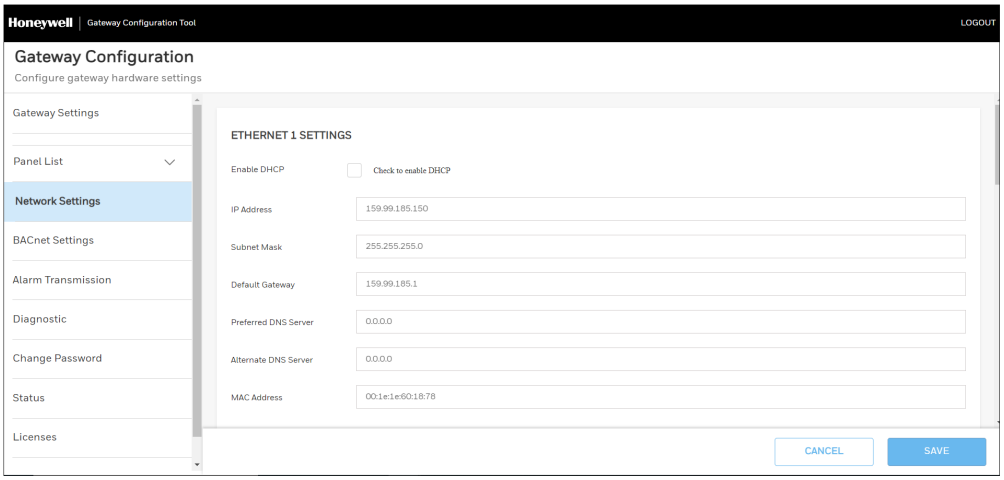

13. Scroll down to **Network Settings**, and in the **TIME SYNC SETTINGS** section, click on the **Enable Timesync** checkbox, provide the Time Server details, and then click **SAVE**.

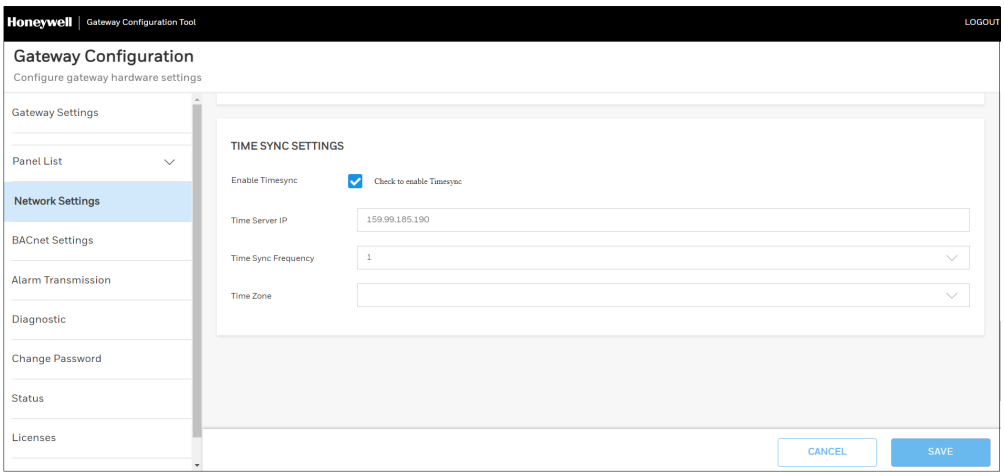

14. Scroll down, and in the **WLAN SETTINGS** dialog, specify the wireless settings values, and then click **SAVE**.

E.6.3 To Provide Server Capability to the Gateway

A *CLSS Gateway* released on May 2021 or earlier acts as a client to the panels, Cloud, and other networked systems. You can make it a master to other systems in the network with a server certificate.

1. Log in to *CLSS Gateway Configuration Tool* using the steps 1 to 9 in the To Configure Using the Configuration Tool section.
2. Click **Diagnostic** in the **Gateway Settings** section.

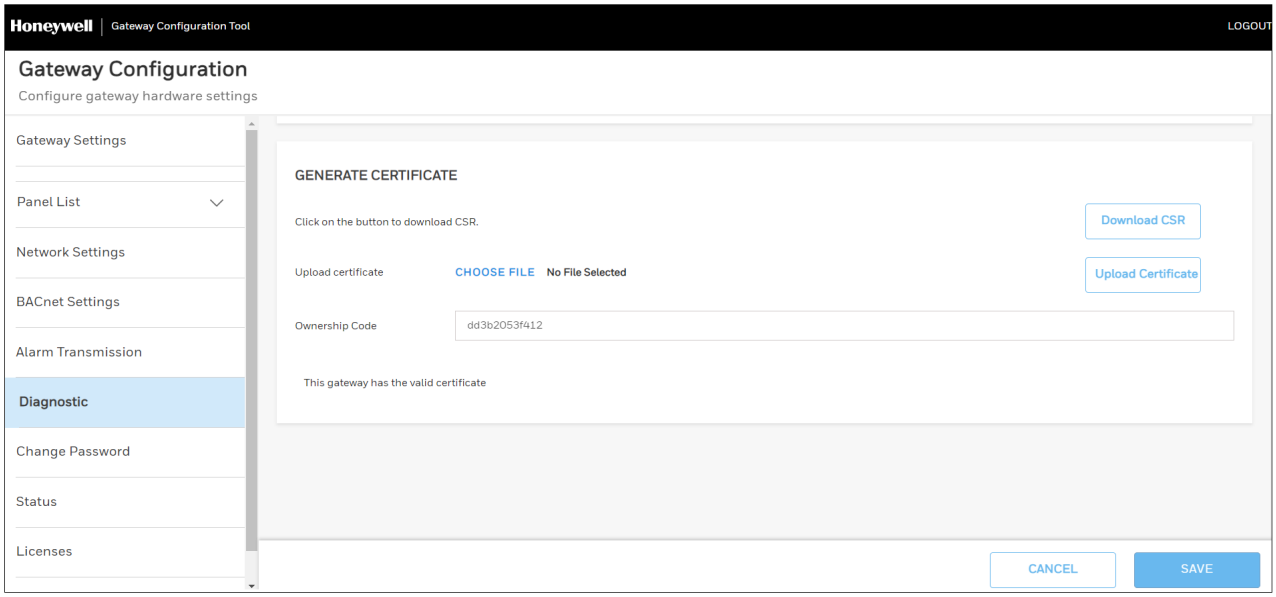

3. Click **Download CSR**.
4. Log on to *CLSS Site Manager*.
5. Go to **Settings** and click **Horizon Certificate Management**.
6. Click **UPLOAD CSR** and select the certificate downloaded.
7. Click **GENERATE**.
8. Wait for the certificate generation success message.

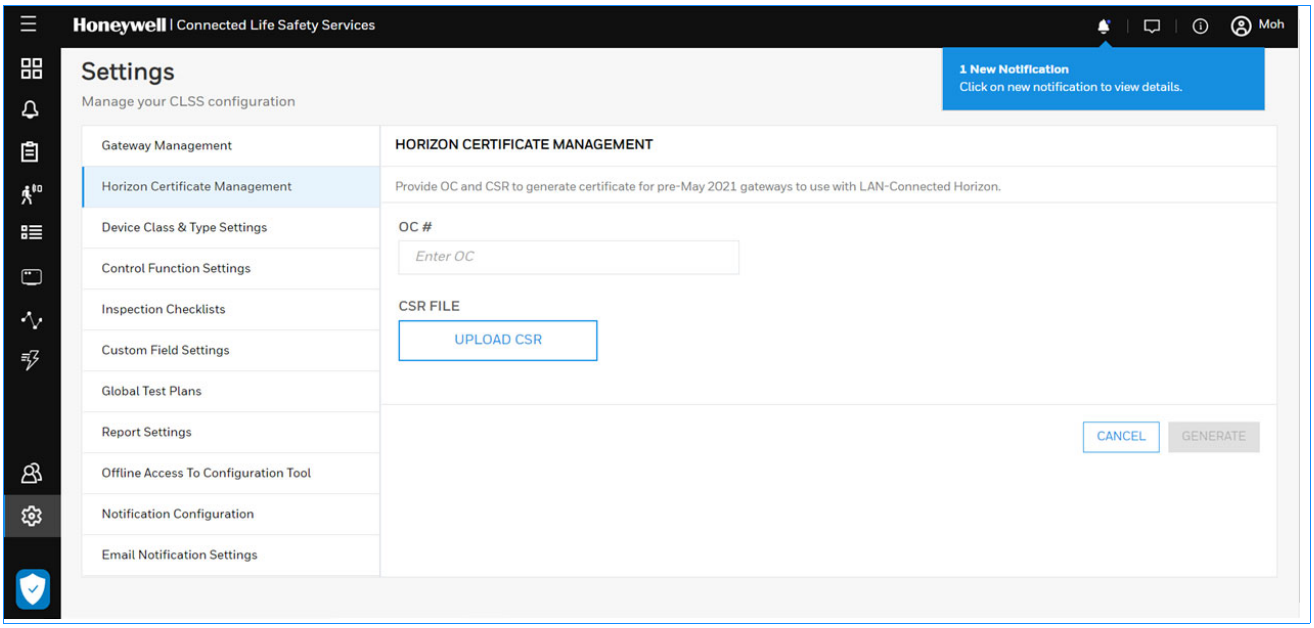

E.7 To Configure the Gateway in CLSS Horizon

1. Log into the *CLSS Horizon* application.
2. Go to **System** and then **Networks** on the menu bar.

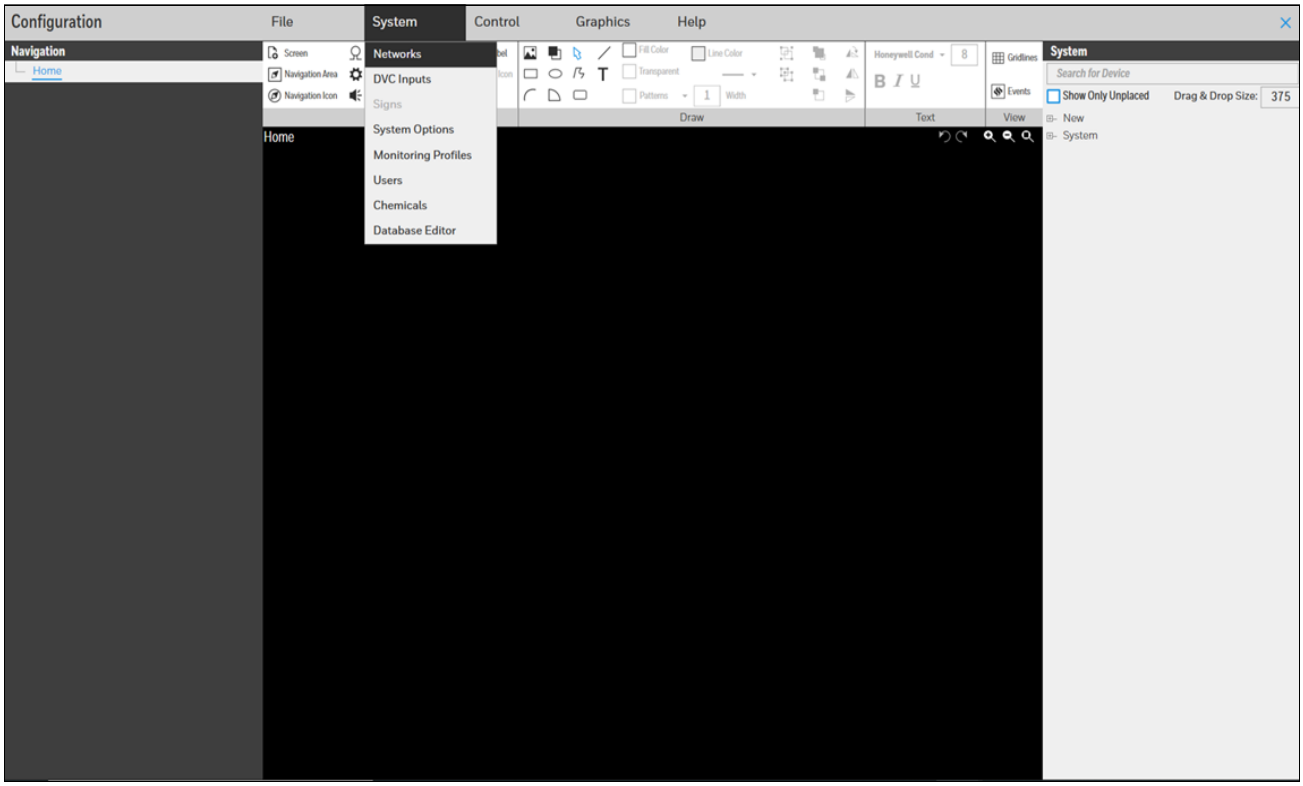

3. Provide the *CLSS Gateway* details and click **OK**.

12 Clintonville Rd
Northford, CT 06472

(203) 484-7161

Building 5 Carlton Park
King Edward Avenue
Narborough, Leicester,
LE19 0AL, UK

+44 (0) 203 4091779

Honeywell