Honeywell

PCD3.E165

16 digital inputs, 24 VDC, 8 ms, source- or sinkoperation

Low-cost input module for source or sink operation with 16 inputs, electrically connected.
Suitable for most electronic and electromechanical switching elements at 24 VDC.

PCD3.E165

Technical data	
Number of inputs	16 electrically connected, source or sink operation
Input voltage	24 VDC (15 … 30 VDC) smoothed or pulsed
Input current:	4 mA per input at 24 VDC
Input delay	typically 8 ms
Resistance to interference acc. to IEC 801-4	2 kV under capacitive coupling (whole trunk group)
Internal current consumption (from +5 V bus)	1…10 mA typically 8 mA
Internal current consumption (from V+ bus)	0 mA
External current consumption	max. 64 mA (all inputs=1) at 24 VDC
Terminals	Pluggable 24-pole spring terminal block (4 405 4956 0), for Ø up to 1 mm²

LEDs and connection terminals

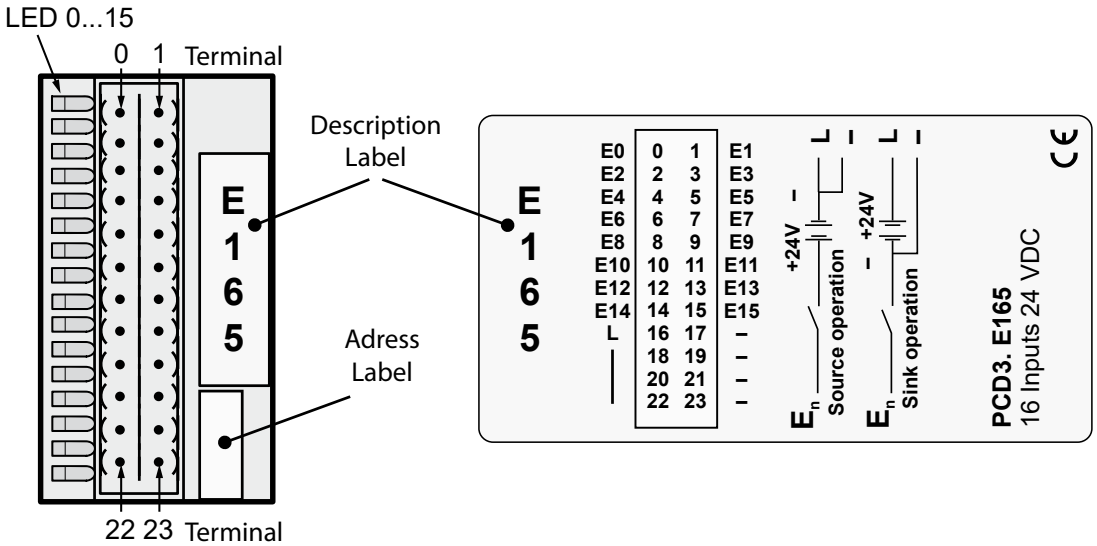

Input circuits and terminal designation

Source operation (positive logic):

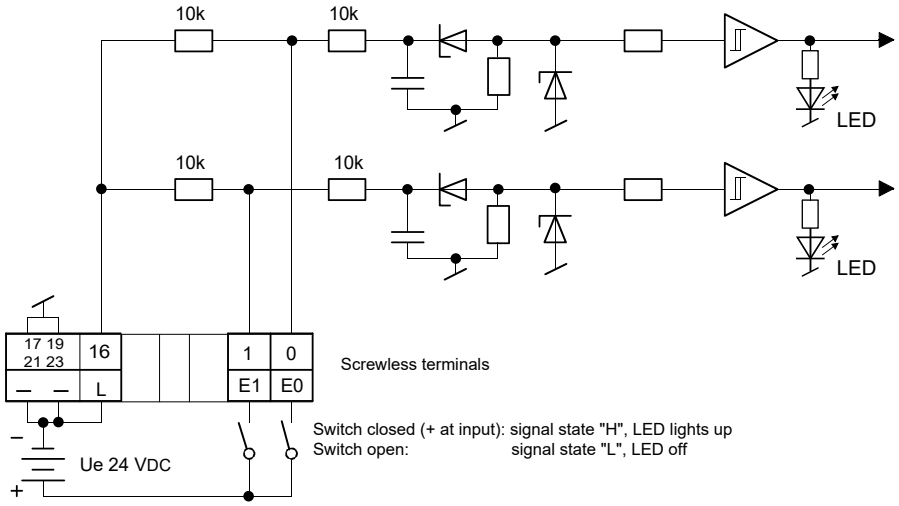

Input level

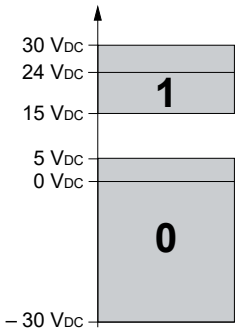

!	**Watchdog:** This module can interact with the watchdog, if it is used on base address 240. In this case, the last input with address 255 cannot be used.
!	I/O modules and I/O terminal blocks may only be plugged in and removed when the Control Edge PCD and the external +24 V are disconnected from the power supply.

Sink operation (negative logic):

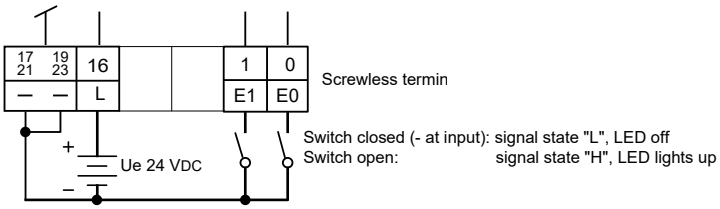

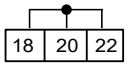

internal connected,
may be used as "distributor",
together max. 500 mA !

PCD3.E165

4 405 4956 0

Order details

Type	Short description	Description	Weight
PCD3.E165	Digital input module, 16 inputs, 24 VDC	Digital input module, 16 inputs, 24 VDC, source and sink operation, 8 ms input delay, (connector type C included)	100 g

Order details accessories

Type	Short description	Description	Weight
4 405 4956 0	Plug-in, type C	Plug-in I/O spring terminal block, 2 × 12-pole up to 1.0 mm², labelled 0 to 23, for modules with 16 I/Os or relay module PCD3.A251, connector type "C"	15 g

ATTENTION

These devices must only be installed by a professional electrician,
otherwise there is the risk of fire or the risk of an electric shock.

WARNING

Product is not intended to be used in safety critical applications,
using it in safety critical applications is unsafe.

WARNING - Safety

The unit is not suitable for the explosion-proof areas and the areas of use excluded in EN 61010 Part 1.

WARNING - Safety

Check compliance with nominal voltage before commissioning the device (see type label).
Check that connection cables are free from damage and that, when wiring up the device, they are not connected to voltage.
Do not use a damaged device!

NOTE

In order to avoid moisture in the device due to condensate build-up, acclimatise the device at room temperature for about half an hour before connecting.

CLEANING

The device can be cleaned in dead state with a dry cloth or cloth soaked in soap solution.
Do not use caustic or solvent-containing substances for cleaning.

MAINTENANCE

These devices are maintenance-free.
If damaged, no repairs should be undertaken by the user.

GUARANTEE

Opening the module invalidates the guarantee.

Observe this instructions (data sheet) and keep them in a safe place.
Pass on the instructions (data sheet) to any future user.

WEEE Directive 2012/19/EC Waste Electrical and Electronic Equipment directive
The product should not be disposed of with other household waste. Check for the nearest authorized collection centers or authorized recyclers. The correct disposal of end-of-life equipment will help prevent potential negative consequences for the environment and human health.

EAC Mark of Conformity for Machinery Exports to Russia, Kazakhstan or Belarus.

Sales and Service

For application assistance, current specifications, pricing, or name of the nearest Authorized Distributor, contact one of the offices below.

ASIA PACIFIC

Honeywell Process Solutions,
(TAC) hfs-tac-support@honeywell.com

Australia
Honeywell Limited
Phone: +(61) 7-3846 1255
FAX: +(61) 7-3840 6481
Toll Free 1300-36-39-36
Toll Free Fax:
1300-36-04-70

China – PRC - Shanghai
Honeywell China Inc.
Phone: (86-21) 5257-4568
Fax: (86-21) 6237-2826

Singapore
Honeywell Pte Ltd.
Phone: +(65) 6580 3278
Fax: +(65) 6445-3033

South Korea
Honeywell Korea Co Ltd
Phone: +(822) 799 6114
Fax: +(822) 792 9015

EMEA

Honeywell Process Solutions,
Phone: +80012026455 or
+44 (0)1344 656000

Email: (Sales)
FP-Sales-Apps@Honeywell.com
or
(TAC) hfs-tac-support@honeywell.com

AMERICA'S

Honeywell Process Solutions,
Phone: (TAC) 1-800-423-9883 or
215/641-3610
(Sales) 1-800-343-0228

Email: (Sales)
FP-Sales-Apps@Honeywell.com
or
(TAC) hfs-tac-support@honeywell.com

Specifications are subject to change without notice.

Process Solutions
Honeywell

1250 W Sam Houston Pkwy S
Houston, TX 77042

Honeywell Control Systems Ltd
Honeywell House, Skimped Hill Lane
Bracknell, England, RG12 1EB

Shanghai City Centre, 100 Jungi Road
Shanghai, China 20061

Honeywell

Document No.: 51-52-03-67
Rev.2.0
April 2020