Honeywell

PCD3.W305

Analog input module, 7 channel, 12 bit, 0 … 10 V, electrically isolated from the CPU

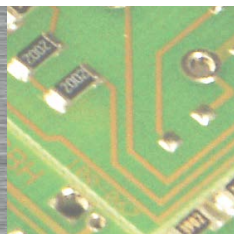

High-speed input modules for general use with 7 channels, each with 12 bit resolution and 0 … 10 V. Electrically isolated from the CPU.

Technical specifications

Number of inputs (channels)	7
Signal range	0 … 10 V
Resolution (representation)	12 bit (0 … 4095)
Resolution (value of least significant bit(LSB))	2.5 mV
Galvanic separation	500 V, electrical isolation of outputs to CPU, channels themselves not separated
Measuring principle	non-differential, single-ended
Input resistance	13.5 kΩ / 0.1 %
Accuracy at 25 °C	± 0.15 %
Repeating accuracy (under same conditions)	± 0.05 %
Temperature error (0 … +55 °C)	± 0.25 %
Conversion time A/D	≤ 2 µs
Overvoltage protection [1]	± 40 VDC (permanent)
EMV protection	yes
Time constant of input filter	typisch 2.4 ms
Internal current consumption (from +5 V bus)	< 60 mA
Internal current consumption (from V+ bus)	0 mA
External current consumption	0 mA
Terminals	Pluggable 10-pole spring terminal block for Ø up to 2.5 mm², plug type E (4 405 4998 0)

[1] No negative input voltage should be applied on these modules !

Block schematic PCD3.W305

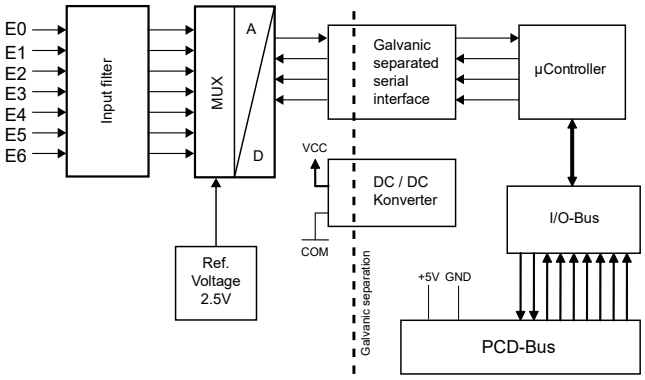

Indicators and connections

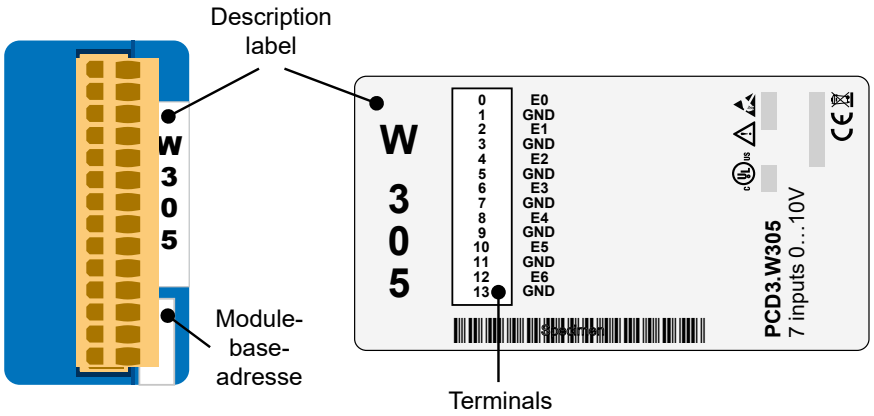

The GND connections are connected together in the module and are galvanically isolated from the CPU. These GNDs must not be connected to the CPU, process GNDs or ground !

Connection concept for voltage inputs

The voltage input signals are connected directly to the 14-pole terminal block (E0 … E6 and GND). To minimize the amount of interference coupled into the module via the transmission lines, connection should be made according to the principle explained below.

Connection for 0 … 10 V

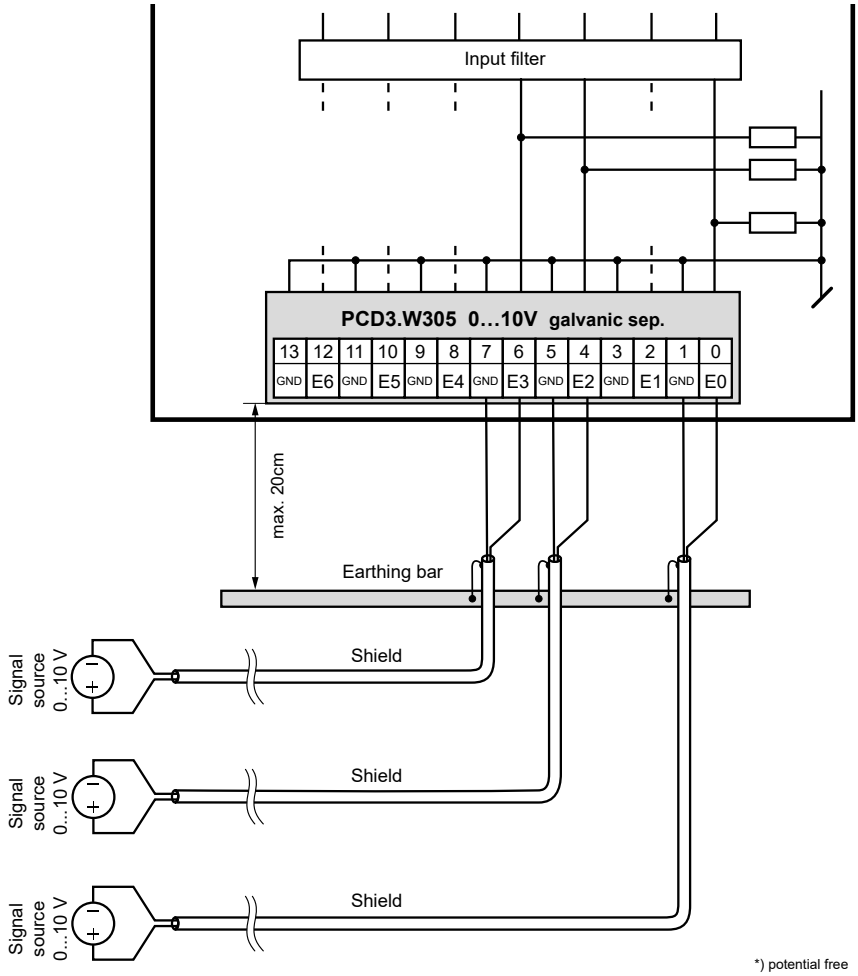

The GND connections are connected together in the module and are galvanically isolated from the CPU. These GNDs must not be connected to the CPU, process GNDs or ground !

If shielded cables are used, the shielding should be connected to an earthing rail.

Input signals with incorrect polarity significantly distort the measurements on the other channels.

Galvanic separation of inputs to CPU, channels themselves not separated.

I/O modules and I/O terminal blocks may only be plugged in and removed when the CPU and the external +24 V are disconnected from the power supply.

Further information
This can be found in the Manual "27-600_I/O-modules for PCD1 / PCD2 series and for PCD3".

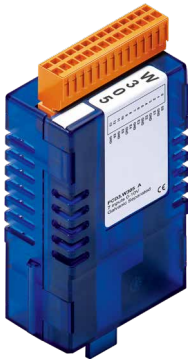

PCD3.W305

4 405 4998 0

Ordering information

Type	Short description	Description	Weight
PCD3.W305	7 analogue inputs 0…10 V, 12 bit, electrical isolation	Analog input module with electrical isolation, 7 channels (the channels are not isolated from each other), resolution 12 bit, range 0…10 V, connection with pluggable spring terminals, connector type E (4 405 4998 0) supplied	100 g

Ordering information equipment

Type	Short description	Description	Weight
4 405 4998 0	Plug-in, type E	Plug-in I/O spring terminal block, 14-pole up to 1.5 mm², labelled 0 … 13	13 g

ATTENTION

These devices must only be installed by a professional electrician,
otherwise there is the risk of fire or the risk of an electric shock.

WARNING

Product is not intended to be used in safety critical applications,
using it in safety critical applications is unsafe.

WARNING - Safety

The unit is not suitable for the explosion-proof areas and the areas of use excluded in EN 61010 Part 1.

WARNING - Safety

Check compliance with nominal voltage before commissioning the device (see type label).
Check that connection cables are free from damage and that, when wiring up the device, they are not connected to voltage.
Do not use a damaged device!

NOTE

In order to avoid moisture in the device due to condensate build-up, acclimatise the device at room temperature for about half an hour before connecting.

CLEANING

The device can be cleaned in dead state with a dry cloth or cloth soaked in soap solution.
Do not use caustic or solvent-containing substances for cleaning.

MAINTENANCE

These devices are maintenance-free.
If damaged, no repairs should be undertaken by the user.

GUARANTEE

Opening the module invalidates the guarantee.

Observe this instructions (data sheet) and keep them in a safe place.
Pass on the instructions (data sheet) to any future user.

WEEE Directive 2012/19/EC Waste Electrical and Electronic Equipment directive
The product should not be disposed of with other household waste. Check for the nearest authorized collection centers or authorized recyclers. The correct disposal of end-of-life equipment will help prevent potential negative consequences for the environment and human health.

EAC Mark of Conformity for Machinery Exports to Russia, Kazakhstan or Belarus.

Sales and Service

For application assistance, current specifications, pricing, or name of the nearest Authorized Distributor, contact one of the offices below.

ASIA PACIFIC

Honeywell Process Solutions,
(TAC) hfs-tac-support@honeywell.com

Australia
Honeywell Limited
Phone: +(61) 7-3846 1255
FAX: +(61) 7-3840 6481
Toll Free 1300-36-39-36
Toll Free Fax:
1300-36-04-70

China – PRC - Shanghai
Honeywell China Inc.
Phone: (86-21) 5257-4568
Fax: (86-21) 6237-2826

Singapore
Honeywell Pte Ltd.
Phone: +(65) 6580 3278
Fax: +(65) 6445-3033

South Korea
Honeywell Korea Co Ltd
Phone: +(822) 799 6114
Fax: +(822) 792 9015

EMEA

Honeywell Process Solutions,
Phone: +80012026455 or
+44 (0)1344 656000

Email: (Sales)
FP-Sales-Apps@Honeywell.com
or
(TAC) hfs-tac-support@honeywell.com

AMERICA'S

Honeywell Process Solutions,
Phone: (TAC) 1-800-423-9883 or
215/641-3610
(Sales) 1-800-343-0228

Email: (Sales)
FP-Sales-Apps@Honeywell.com
or
(TAC) hfs-tac-support@honeywell.com

WARRANTY/REMEDY

Honeywell warrants goods of its manufacture as being free of defective materials and faulty workmanship. Contact your local sales office for warranty information. If warranted goods are returned to Honeywell during the period of coverage, Honeywell will repair or replace without charge those items it finds defective. The foregoing is Buyer's sole remedy and is **in lieu of all other warranties, expressed or implied, including those of merchantability and fitness for a particular purpose.**
Specifications may change without notice. The information we supply is believed to be accurate and reliable as of this printing. However, we assume no responsibility for its use.
While we provide application assistance personally, through our literature and the Honeywell web site, it is up to the customer to determine the suitability of the product in the application.

Specifications are subject to change without notice.

For more information

Learn more about ControlEdge PCD, visit our website www.honeywellprocess.com/ControlEdgePCD or contact your Honeywell account manager.

Honeywell Process Solutions
2101 CityWest Blvd, Houston TX 77042
Honeywell House, Skimped Hill Lane

Bracknell, Berkshire, England RG12 1EB UK
Building #1, 555 Huanke Road,

Zhangjiang Hi-Tech Industrial Park,
Pudong New Area, Shanghai 201203

Honeywell

Document No.: 51-52-03-82
Rev.3.0
June 2020