Honeywell

Technical Information

ControlEdge PLC Specification

CE03-100-183.1

Release 183.1

June 2026

Version 1.6

Revision History

Revision	Date	Description
1.0	September 2021	ControlEdge PLC R171 software release
1.1	March 2022	RUIO, MasterLogic I/O modules, and Honeywell VFD information added
1.2	August 2022	Extended Temperature PLC hardware information added.
1.3	December 2022	ControlEdge PLC R174 software release
1.4	December 2023	ControlEdge PLC R180 software release
1.5	June 2025	ControlEdge PLC R180.1: Added new power supply model "900P24-0701" for extended temperature range.
1.6	June 2026	Draft for ControlEdge PLC R183.1: Added support for IEC 60870-5-104 Master (Client)

Note:`
Product release number is applicable for software and firmware of the product. Hardware is referred with version number and is not associated with software release number.

Table of Contents

1. Introduction 5

1.1. ControlEdge PLC Overview 5

1.2. Document Scope 6

1.3. Terminology 6

2. Specifications 7

2.1. Control Processor Module (900CP1-0200) and Ext. Temp (-40 to 70°C) Model (900CP1-0300) and Control Processor Module (900CP2-0100) 7

2.1.1. Performance and Capability 7

2.1.2. Hardware specification and Features 7

2.1.3. Datalog Support 8

2.1.4. Communication Capabilities 8

2.2. Expansion Processor Module (900SP1-0200) and Ext. Temp (-40 to 70°C) Model (900SP1-0300) 14

2.2.1. Hardware specification and Features 14

2.2.2. Communication Capabilities 14

2.3. I/O Network Topology 14

2.4. Serial Communication Module (900ES1-0100) 16

2.5. ControlEdge 900 Input/output Module 17

2.5.1. Universal Input/output Module (900U01-0100, HW Revision E, Version 02 in Builder) 17

2.5.2. Universal AI (900A01-0202) 20

2.5.3. Analog Input High Level, 16 Channel (900A16-0103) 22

2.5.4. Analog Output, 0 to 20mA, 4 Channel (900B01-0301) 24

2.5.5. Analog Outputs 0 to 20mA, 8 Channel (900B08-0202) 25

2.5.6. Digital Input 120/240 VAC (900G03-0202) 26

2.5.7. Digital Input 24 VDC (900G32-0301) 27

2.5.8. Digital Input Module - Contact type (900G01-0202) 27

2.5.9. Digital Input, 120/240 VAC-125VDC (900G04-0101) 28

2.5.10. Digital Output 120/240 VAC (900H03-0202) 29

2.5.11. Digital Output 24 VDC (900H32-0302) 30

2.5.12. Relay Output Module, 8 Channel (900H01-0202) 31

2.5.13. 4 Channel Pulse/Frequency/Quadrature Module – DC Voltage type (900K01-0201) 32

2.5.14. IOM scan time 33

2.6. MasterLogic Input/Output Modules 33

2.6.1. MLE-DC32A: Digital Input, 24 VDC, 32 Channel 34

2.6.2. MLE-TN32A: Digital Open Collector Output, 32 Channel 35

2.6.3. MLE-DR16A: Digital Input, 24 VDC, 8 Channel & Digital Output, Relay 24 VDC, 8 Channel 35

2.6.4. MLF-AD08A: Analog Input, Current/Voltage, 8 Channel 37

2.6.5. MLF-AD04C: Analog Input, Current/Voltage, High Voltage, 4 Channel 38

2.6.6. MLF-DC04C: Analog Output, Current, High Voltage, 4 Channel 40

2.6.7. MLF-AH04A: Analog Input, Current/Voltage, 2 Channel & Analog Output, Current/Voltage, 2 Channel 41

2.6.8. MLE-TP32A: Digital Output, Open Collector, 32 Channel 42

2.6.9. MLE-RY16A: Digital Output, Relay, 16 Channel 43

2.6.10. MLF-DC04A: Analog Output, Current, 4 Channel 44

2.6.11. 2MLI-D22A: Digital Input, 24 VDC (Sink/Source Type), 16 Channel 44

2.6.12. 2MLI-D28A: Digital Input, 24 VDC (Sink/Source Type), 64 Channel 45

2.6.13. 2MLQ-TR2A: Digital Output, TR, 0.5A (Sink Type), 16 Channel 46

2.6.14. 2MLQ-TR8A: Digital Output, TR, 0.1A (Sink Type), 64 Channel 46

2.6.15. 2MLF-AD16A: Analog Input, Current/Voltage,16 Channel 47
2.7. MasterLogic EtherNet/IP Adapters 48
2.7.1. MEL-BSSRT EtherNet/IP adapter for ML50 I/O 48
2.7.2. 2MLL-DBDT EtherNet/IP adapter for ML200 I/O 51
2.8. Honeywell VFD integrated over EtherNet/IP 54
2.8.1. MVS100 Product Specification Details 54
2.9. I/O Wiring 56
2.10. Power Supply 57
2.10.1. 120/240VAC Power Supply (900P01-0501) 57
2.10.2. 24VDC Power supply (900P24-0501) 57
2.10.3. 120/240VAC Power Supply (900P01-0701) 58
2.10.4. 24VDC Power supply (900P24-0701) 58
2.11. Power Status Module (900PSM-0200) 58
2.12. ControlEdge Builder Specification 58
2.12.1. ControlEdge Builder Capabilities 58
2.12.2. ControlEdge Builder Hardware Requirements 59
2.12.3. Project Limits in ControlEdge Builder 59
2.12.4. Software Licenses 60
2.13. Controller Simulator Specification 60
3. Hardware Power Consumption, Heat Dissipation and Weight 61
3.1. ControlEdge900 I/O Modules 61
3.1.1. Power Consumption and Heat Dissipation 61
3.1.2. Dimensions and Weight 62
3.2. MasterLogic I/O Modules 64
3.2.1. Power Consumption and Heat Dissipation 64
3.2.2. Dimensions and Weight 65
4. Hardware Spacing Requirement 66
4.1. ControlEdge 900 I/O Modules 66
4.2. ML50/200 I/O Modules 66
5. Environment Conditions (ControlEdge 900 I/O modules) 67
6. Standards and Approvals (ControlEdge 900 I/O Modules) 69
7. Module Number List 72
7.1. ControlEdge 900 I/O Modules 72
7.2. ML50/200 I/O Modules 74

1. Introduction

This document provides technical information for the Honeywell ControlEdge™ PLC. Product details can be found in the Product Information Note. Detailed planning, installation and configuration information is available in the product user guides.

1.1. ControlEdge PLC Overview

Honeywell's advanced Programmable Logic Controller (PLC) technology improves control performance while offering greater flexibility and lower costs. The new ControlEdge™ PLC improves integration with Experion®, HMIs and third-party devices, and reduces configuration efforts by utilizing the industry-accepted IEC 61131-3 programming languages, as well as remote configuration and firmware updates.

The key features of the ControlEdge PLC include:

- First PLC with HART enabled Redundant/Non-redundant Universal I/O module for greater configuration flexibility
- ISASecure EDSA Level 2 certified cyber security capabilities improved safety of the plant and personnel
- Designed and developed by Honeywell, a global leader in process automation for more than 40 years
- Tightly integrated with Experion, Honeywell's best-in-class Distributed Control System (DCS), Supervisory Control and Data Acquisition (SCADA) system, safety system and Experion Panel PC
- Tight integration with Honeywell's market leading Field Device Manager - FDM
- Native controller redundancy
- Optionally redundant power supplies
- I/O racks of various sizes (1,4, 8 and 12 IO slots options)
- Two variants for power supplies: 58W 24VDC at 51°C, 58W 110/240 AC.
- Two variants for extended range power supplies: 41W 24VDC, 41W 110/240 AC.
- Leverages Honeywell's LEAP™ project methodology and Universal I/O for greater configuration flexibility
- Compatible with leading open network standards such as Modbus and OPC UA
- Built-in EtherNet/IP Protocol with both Server and Client, ODVA Certification
- Built-in PROFINET Protocol with PROFINET IO Controller
- Support DLR on EtherNet/IP Protocol Client and PROFINET IO Controller
- Support DNP3 Master and Outstation
- Support Serial Communication Module (2×RS232 ports, 2×RS485 ports) with User Defined Protocol
- Connects to Human-Machine Interface (HMI) through Modbus and OPC UA protocols
- Support MQTT with Sparkplug B with DNS function for remote monitoring and analytics
- Powerful IEC 61131-3 programming environment
- HART function block supporting all HART commands in PLC
- Support Removal and Insertion under Power for CPM and I/O modules
- Support Fail safe state configuration on output signal type
- Simulation support on standalone and on Virtual Engineering Platform
- Support Subsea application MDIS based on OPC UA
- Support Fault Tolerant Ethernet (FTE) network.
- Support communication to EUCN when CPM is working as ELMM. EUCN uses FTE as media.
- Support both IEC60870-5-104 Outstation (server) and Master (Client) simultaneously.
- Support recording data locally for standalone or as a backup-data source to a Historian or SCADA.
- Robust support for MasterLogic IO to increase resiliency for high performance applications.

1.2. Document Scope

This document provides specifications for the following components:

- ControlEdge PLC Controller
- ControlEdge PLC IO Modules
- ControlEdge PLC Expansion Processor Module
- ControlEdge PLC Serial Communication Module
- ControlEdge PLC Power Supplies
- ControlEdge PLC Power Status Modules
- ControlEdge PLC Racks
- ControlEdge Remote Termination Panel
- ControlEdge Builder

1.3. Terminology

Terminology	Description
CIP	Common Industrial Protocol
CPM	Control Processor Module
CPU	Control Processor Unit
DLR	Device Level Ring
DNP3	Distributed Network Protocol Version 3
DNS	Domain Name System
ELMM	Enhanced Logic Manager Module
EPM	Expansion Processor Module
ETAP	EtherNet/IP™ Tap
EUCN	Enhanced Universal Control Network
Expansion I/O Rack	I/O Rack with EPM installed
FTE	Fault Tolerant Ethernet
I/O Network	Network between CPM and expansion I/O rack
MQTT	Message Queuing Telemetry Transport
IPsec	Internet Protocol G3
Local I/O Rack	I/O Rack with CPM installed
ODVA	Open Device Vendors Association
OWD	Open Wire Detect
Redundant CPM Rack	Rack with 2 CPMs installed
RSM	Redundant Switch Module
RTP	Remote Terminal Panel
SCADA	Supervisory Control And Data Acquisition
VM	Virtual Machine
PPS	Parameters Per Second
VEP	Virtual Engineering Platform
UIO	Universal Input/output Module
VFD	Variable Frequency Drive

2. Specifications

2.1. Control Processor Module (900CP1-0200) and Ext. Temp (-40 to 70°C) Model (900CP1-0300) and Control Processor Module (900CP2-0100).

The ControlEdge PLC has a rack based modular hardware design with control processor modules that plug onto different rack options depending on system configuration requirement.

2.1.1. Performance and Capability

Item	Specification
Maximum I/O Modules per controller	144[1,2]
Maximum Analog channels per controller	2304[1,2]
Maximum Digital channels per controller	4608[1,2]
Maximum expansion I/O racks for non-redundant controller	11
Maximum expansion I/O racks for redundant controller	12
Command execution time	85µs per 1000 commands in ST
Note: 1. I/O capability, as a soft limit, will decrease depending on the number of used EtherNet/IP connections and PROFINET IO Devices connected. Refer performance calculator tool for details. 2. I/O capability is based on I/O module type selection and combination. For more information, see section 2.5. 3. Only limited for 900 IO modules, not for MasterLogic IO modules.	

2.1.2. Hardware specification and Features

Item	Specification
Processor	Dual Core ARM® Cortex™-A9 Core (32 bit) 667 MHz
User Programming memory, (Flash)	User: 10 MB (Program 5 MB, Data 5 MB). 256 MB (Flash) of (900CP1-0200 and 900CP1-0300). 512MB (Flash) of (900CP2-0100).
SD card support	32GB Class 6 / Class 10 industry standard
Running Memory (RAM)	256MB with Error Correction Code of (900CP1-0200 and 900CP1-0300). 512MB with Error Correction Code of (900CP2-0100).
Controller Redundancy	Supported (Hot Standby)
Real-Time Clock	2 weeks of retention after a power loss
CPU Watchdog	CPU automatically resets if error is detected
Nonvolatile memory data life	20+ years (no battery required)
Real-time clock resolution	1 ms
I/O Scan Time	10 ms – 3000ms (adjustable per control strategy)
Switchover	Internal parameters, variables and outputs are maintained during transition. Switchover time <100 ms
Operating Modes	Run Locked Stop Locked Remote Running Remote Stopped
LED	2 LEDs, three color each, indicate the status and role of the CPM
Note: **Switchover time**: It is the typical controller Switchover time for the secondary CPM to assume process control from the primary CPM. The total duration will be extended when accounting for the establishment and stabilization of all uplink communication protocol connections.	

2.1.3. Datalog Support

Item	Specification
Datalog Media	Flash memory or optional SD Card
Datalog rate	Configurable: 1 second, 5 seconds, 10 seconds, 1 minute, 5 minutes, 10 minutes and1 hour
Datalog Timestamp resolution	1 ms

2.1.4. Communication Capabilities

Item	Specification
Ethernet Ports	4
Network connection	Shielded RJ45 connector, auto-crossover
Network port speed	10/100BaseTx, auto-detecting
Isolation	1500 Volts RMS 1 minute, 60 Hz
Transient Voltage Suppression	600W peak pulse power capability at 10×1000μs waveform, repetition rate:0.01%
Diagnostic LEDs on each port	Yes
Protocols, CPM ports 1 & 2	MODBUS TCP/UDP, OPC UA, HART-IP, CDA Responder, EtherNet/IP Server, EUCN[1], DNP3, MQTT, IEC60870-5-104 Outstation (Server) and Master (Client)
Protocols, CPM ports 3 & 4	I/O Communication, EtherNet/IP Client, PROFINET
Embedded Firewall[2]	Supported on ports 1&2
IPsec[3]	Supported on ports 1&2
FTE	Supported on ports 1&2
Time Synchronization[4]	SNTP, DNP3

Note:
1. EUCN is available, only when CPM is working as PLC-FTE (formerly ELMM). PLC-FTE is a separate firmware image.
2. For detailed information of Firewall, see ControlEdge PLC and ControlEdge RTU Network and Security Guide.
3. Running on Windows 10 or Windows Server 2016 OS or later version.
4. PLC's time can be synchronized from either NTP/SNTP server or DNP3 Master.

Modbus Protocol

Item	Specification
Device Function	Master and Slave
Multi-Master support	Yes
Ethernet support	MODBUS TCP and Modbus UDP[1], Configurable TCP port number and TCP Inactivity Timeout
Serial support	Modbus RTU or ASCII (Master/Slave) via Serial Communication Module (900ES1-0100)
Slave connection	64 per Ethernet port, 32 per Serial port, 128 per CPM
Master connection per CPM	16 per Ethernet port
Maximum Number of Registers per CPM as slave	16000
Register Size[2]	16, 32, 64 Bits
Ethernet Network Connection	10/100 Base-T, RJ-45
Note: 1. User Datagram Protocol 2. 32 and 64 Bits is available, only when CPM is working as Modbus Master.	

OPC UA Protocol

Item	Specification
Device Function	Server and Client
Generic OPC information models	Data Access (DA), Subscription
Technology specific information models	PLCOpen V1.0
Number of OPC UA Client per CPM	10
Number of OPC UA Server per CPM	10
Number of variables for one CPM acting as OPC UA Server	2000
Number of variables for one CPM acting as OPC UA Client	500
Supported data types	BOOL, SBYTE, BYTE, INT16, UINT16, INT32, UINT32, INT64, FLOAT, DOUBLE, STRING (max 255 characters), DateTime
Certified Profile	Embedded UA Server Profile, Minimum UA Client Profile
Additional Facets	Attribute Read Client Facet, Attribute Write Client Facet, DataChange Client Facet, Method Client Facet
Security Policies	SecurityPolicy - Basic128Rsa15, SecurityPolicy - Basic256, SecurityPolicy - Basic256Sha256, SecurityPolicy - Aes128_Sha256_RsaOaep, SecurityPolicy - Aes256_Sha256_RsaOaep
User Identity Tokens	User Token - Anonymous Facet, User Token - User Name Password Server Facet
Certificate Management	Global Discovery Services "Push" model - UA Server Global Discovery Services "Pull" model - UA Client
Note: MDIS is an application based on OPC UA, so they have the same specification. The MDIS library has a set of OPC UA function blocks representing all the MDIS OPC UA object types as defined in the MDIS OPC UA Companion Specification V1.2. The MDIS OPC UA Object function blocks are used to obtain data from MDIS OPC UA compliant Servers.	

MQTT Protocol

Item	Specification
Device Function	Edge of Network (EoN) Node, OASIS MQTT v3.1.1 compliant client
MQTT Payload Type	Sparkplug B
Maximum MQTT broker connections	1 active server with 1 backup server across both Ethernet ports.
Variable Capacity	2000
Supported Data Types	BOOL, SINT, USINT, INT, UINT, DINT, UDINT, REAL and LREAL
Data Publish Modes	Periodic or Event
MQTT Quality of Service (QoS) Levels Supported	0: At most once delivery 1: At least once delivery 2: Exactly once delivery
Secured Communications	TLS v1.2, v1.3 White list
Support Store & Forward	Yes
broker URL addresses	DNS and multi-gateway routing (static routing)

Note:
1) DNS is converting a hostname (such as www.example.com) into a computer-friendly IP address (such as 192.168.1.1.).
2) Multi-gateway routing is used for data transferring via right way even you don't know the exact IP address.
3) DNS and multi-gateway routing is only for MQTT protocol in Release R174.1.

CDA Protocol

Control Data Access (CDA) is a protocol used for communication between the PLC Controller and controllers in Experion PKS and PlantCruise/LX system. All supported points in ControlEdge PLC can be browsed[1] in Experion Control Builder for CDA communication.

Item	Specification
Supported Experion Controllers	C300, ACE, SIM-C300, SIM-ACE, UOC, vUOC
Maximum Peer to Peer Outgoing Data	1000 PPS (Parameters Per Second)
Number of CDA Responder connections	20
Supported Data Types	BOOL, SINT, INT, DINT, USINT, UINT, REAL, LREAL, BYTE, WORD, DWORD, ULINT, LWORD, STRING

Note:
1. Browsing feature of PLC tags will be supported from Experion R511.3 or later version.
2. For CDA link redundancy, it is suggested to deploy PLC-FTE firmware when connecting to Experion FTE network.
3. CDA communication on PLC is designed for peer to peer communication between PLC and Experion Controllers. For communication to Experion Server/Stations, it is suggested to use OPC UA with ControlEdge PLC channel.

EtherNet/IP Protocol

EtherNet/IP™ is an application layer protocol for industrial automation applications. It uses all the transport and control protocols used in traditional Ethernet including the Transport Control Protocol (TCP), the User Datagram Protocol (UDP), the Internet Protocol (IP) and the media access and signaling technologies found in off-the-shelf Ethernet interfaces and devices. It allows the user to address a broad spectrum of process control needs using a single technology.
The Common Industrial Protocol (CIP) is an industrial protocol for industrial automation applications. It is used in EtherNet/IP.

Item	Specification
Device Function	Server and Client
Certification	ODVA Conformant
Maximum Packets/Parameters per Seconds	8000 PPS (Packets per Second) for Class 1 Implicit messaging 1000 PPS (Parameter per Second) for Class 3 Explicit messaging
Client Class 1 Implicit (I/O) Messaging	CIP Connections: 160 Total Combined Input and Output Data Size: 320KB Maximum Data Size: 1024 Bytes per device Connection Type (Target to Originator): Multicase/Unicast Transport Trigger: Cyclic Data Type: Based on EDS file or BYTE, DINT, INT, REAL (generic module) Tag Access Method: Data Read/Write RPI: 20-3200ms Electronic Keying: Supported Network Levels: Single Level
Client Class 3 Explicit (Peer to peer) Messaging	Class 3 CIP Connation: 10 Maximum Data Size: 480 Byte (Read), 256 Byte (Write) Connection Type: Peer to Peer Transport Trigger: Application Data Type: BOOL, SINT, INT, DINT, USINT, UNIT, UDINT, REAL RPI: Follow Task Cycle Time
Server Class 3 Explicit Messaging	CIP Connection: 32 Connection Type: Peer to Peer Tag Access Method: Data Read/Write Data Type: BOOL, SINT, INT, DINT, USINT, UNIT, UDINT, REAL RPI: Follow Task Cycle Time
Network Topology	DLR, STAR, LINEAR[1], MIXED
Qualified Switch Type	MOXA[2, 3, 4], Stratix5700, Stratix 8000, 1783-ETAP

Note:
1. LINEAR topology is supported only for non-redundant CPM.
2. Qualified MOXA switches are listed in the section 2.3.
3. Communication between ControlEdge PLC controller and I/O modules in the I/O expansion rack is only supported through MOXA switches.
4. Moxa or any other unmanaged switches (copper/fiber) are not recommended for ring network (HSR/DLR).

PROFINET Protocol

PROFINET™ is an Ethernet open standard (IEC 61158) defined by PI (PROFIBUS and PROFINET International) and complies with the industrial Ethernet requirements. PROFINET IO is Ethernet based automation standard. PROFINET uses TCP/IP for diagnostics, non-real time critical data and for communicating with other non PROFINET IO based devices. PROFINET uses real-time protocol for IO data access. This real-time protocol co-exists with TCP/IP stack without restrictions.

Item	Specification
CPM as a PROFINET IO Controller	Yes
CPM as a PROFINET IO Device	No
Number of PROFINET Devices	128
PROFINET IO Device Minimum Scan Interval	8 ms[1]
Max. Size of Cyclic Input and Output Data	64 KB includes IOxS[2] status bytes
Acyclic Communication	No
DCP Function	No
Alarms	No
Diagnostics	Yes
HART Support	No
Controller Redundancy	Yes. S2 redundancy is not supported.[3]

Note:
1. 8 ms is the fastest scan interval setting for CPM. However, the fastest scan interval depends on both Controller and connected device scan speeds.
2. IOxS means IOPS and IOCS.
3. PROFINET is supported on redundant PLC. S2 redundancy is not supported. PROFINET devices will take about 3 sec to connect to redundant controllers after switchover.
4. A separate license SP-IPROF01 is needed for each logic controller.

DNP3 Protocol

Item	Specification
Device Function	Master and Outstation (Slave)
Protocol Compliance Level[1]	Level 3+
Capacity of events buffered	Flash memory: 100,000 events or Optional SD Card: 500,000 events
Data monitoring by multiple DNP3 Masters	Yes, on separate ports (5 masters per port, 10 masters total)
Maximum connections to Outstations	10 Outstations across both Ethernet ports
Register Capacity	6,000 per Ethernet port
Report by Exception Capability	Yes
Ethernet Support	Yes, configurable TCP port number – default 20000
Serial Support	No
Check Before Operate (CBO) Support	Yes

Note:
1. See ControlEdge PLC DNP Device Profile Document (DPD) for complete details

HART-IP Protocol

Honeywell's Field Device Manager[1] R500.2 and FDM Express[1] R500 Express onwards uses HART-IP for instrument asset management of ControlEdge PLC connected HART devices.

Item	Specification
Device Function	Read system capacity of ControlEdge PLC Read ControlEdge PLC and HART devices identity information HART command passes through to the connected HART devices HART delayed response mechanism to maximize system performance
Ethernet support	HART-IP Protocol, Version 7, based on TCP/IP Configurable TCP port number Support single Honeywell Field Device Manager connection
Note: For more information about FDM, please refer to FDM Specification.	

EUCN Protocol

EUCN is a communication protocol for ELMM applications. ELMM requires software release TPN R688.1 or later version.

Item	Specification
FTE Protocol	Honeywell Proprietary protocol that provides built-in communication redundancy on the uplink communication ports, i.e., ETH1 and ETH2
EUCN Communication	Honeywell Proprietary UCN protocol built over FTE Has a built-in firewall and connects to Level 2 network directly
Note: EUCN Protocol support also provides Logic Manager Point processing capability on ControlEdge PLC. See LMM Specifications	

IEC60870-5-104 Protocol- Outstation (Server)

Item	Specification
Device Function	Outstation (Server/ Slave)
Maximum connections with Masters (Client) while acting as Controlled Station	Up to 5 Masters per Ethernet port
Variable Capacity	5000 parameters
Data update modes	General Interrogation, Spontaneous, Cyclic
Events Storage Capacity	50K on Flash or 150K events using onboard SD Card
Point Types Supported	Binary Inputs, Analog Inputs, Counters
Time Synchronization	SNTP server or IEC60870-5-104 master
Supported Commands	Interrogation, Cyclic, Spontaneous, Control
Redundancy	Channel Redundancy
Security	TLS v1.2 v1.3 based secured communications

IEC60870-5-104 Protocol- Master (Client)

Item	Specification
Device Function	Master (Client)
Maximum connections with Outstation (Server) while acting as Controlling Station	Total 36 connections
Variable capacity	5000 parameters
Data update modes	General Interrogation, Spontaneous, Cyclic
Point Types supported	Binary Inputs, Analog Inputs, Counters
Supported Commands	Interrogation, Cyclic, Spontaneous, Control
Security	TLS v1.2 v1.3 based secured communications

2.2. Expansion Processor Module (900SP1-0200) and Ext. Temp (-40 to 70°C) Model (900SP1-0300)

EPM acts as the interface module between expansion I/O and control processor module. Required for I/O racks to communicate to CPMs in a different rack.

2.2.1. Hardware specification and Features

Item	Specification
Processor	Dual Core ARM® Cortex™-A9 Core (32 bit) 667 MHz
Rotary Address Switch	Determine the Rack address range from 1 to 99
LED	2 LEDs, three color each, indicate the status of EPM

2.2.2. Communication Capabilities

Item	Specification
Ethernet Ports	2
Network connection	Shielded RJ45 connector, auto-crossover
Network port speed	10/100BaseTx, auto-detecting
Isolation	1500 Volts RMS 1 minute, 60 Hz
Transient Voltage Suppression	600W peak pulse power capability at 10×1000μs waveform, repetition rate:0.01%
Diagnostic LEDs on each port	Yes
Protocols, EPM ports 1 & 2	I/O Communication

2.3. I/O Network Topology

ControlEdge 900 platform hardware supports Star, Ring and DLR topology to connect Expansion I/O rack, EtherNet/IP, and PROFINET I/O devices with CPM rack.

Item	Specification
Expansion I/O Network Topology	Star, Ring or DLR topology supported up to 100baseTx using standard RJ45 connections for both Redundant and non-redundant systems.
I/O network maximum cable lengths	<u>Shielded Ethernet cable</u> 100 m (328 ft.) CPM to EPM (expansion I/O rack), or to switch. <u>Fiber optic cable</u> multi-mode: 5000m (16,404 ft.)[1] CPM to EPM or to switch. Single mode: 40km (131,234 ft.) [1] CPM to EPM or to switch.

Item	Specification
Network Switch and Fiber Optic Equipment Recommendations[2]	Unmanaged Ethernet Switches[3] • Moxa model EDS-308 with (eight) 10/100 Ethernet ports • Moxa model EDS-308-MM-SC with (six) 10/100 Ethernet ports, (two) multi-mode fiber ports with SC Connectors • Moxa model EDS-308-SS-SC with (six) 10/100 Ethernet ports, (two) single mode fiber ports with SC Connectors • Moxa model EDS-316-MM-SC with (fourteen) 10/100 Ethernet ports, (two) multi-mode fiber ports with SC Connectors • Moxa model EDS-316-SS-SC with (fourteen) 10/100 Ethernet ports, (two) single mode fiber ports with SC Connectors • Moxa model EDS-308 with (eight) 10/100 Ethernet ports, G3 coated • Moxa model EDS-308-MM-SC with (six) 10/100 Ethernet ports, (two) multi-mode fiber ports with SC Connectors, G3 coated • Moxa model EDS-308-SS-SC with (six) 10/100 Ethernet ports, (two) single mode fiber ports with SC Connectors, G3 coated • Moxa model EDS-316-MM-SC with (fourteen) 10/100 Ethernet ports, (two) multi-mode fiber ports with SC Connectors, G3 coated • Moxa model EDS-316-SS-SC with (fourteen) 10/100 Ethernet ports, (two) single mode fiber ports with SC Connectors, G3 coated Fiber Optic Converters[3] • Qualified Moxa IMC-101-M-SC with 10/100BaseT(X) to 100BaseFX multi-mode fiber port with SC connectors • Qualified Moxa IMC-101-S-SC with 10/100BaseT(X) to 100BaseFX single mode fiber port with SC connectors • Qualified Moxa IMC-101-M-SC with 10/100BaseT(X) to 100BaseFX multi-mode fiber port with SC connectors, G3 coated Qualified Moxa IMC-101-S-SC with 10/100BaseT(X) to 100BaseFX single mode fiber port with SC connectors, G3 coated Copper Ethernet cable • Shielded CAT5 Cable Fiber optic cable • 50/125µm with SC connectors on both ends (Multi) • G.652 with SC connectors on both ends (Single)

Note:
1. Select qualified MOXA switch as I/O Network Switch. For detail information refer to MOXA datasheet.
2. Honeywell Model number is available in Model number list.
3. All Ethernet Switches and Fiber Optic convertors require 24VDC Power.

2.4. Serial Communication Module (900ES1-0100)

Serial Communication module provide 2* RS232 Port and 2* RS485 port. Supporting Modbus Serial communication protocol and user defined protocol.

Item	Specification
Protocol support	Modbus ASCII Master Modbus ASCII Slave Modbus RTU Master Modbus RTU Slave User defined Protocol
Connector	2*RS232:9-Pin D-sub male connector, share the same isolator 2*RS485: Isolated from each other and from RS232 ports
Galvanic Isolation	2000 VDC
Maximum slave devices connected per RS485 port	32
Module status LED	Supported
Channel communication LED	Supported
Maximum communication module per CPM	6
Operation Temperature	-40 to 70°C
Storage Temperature	-40 to 85°C
Baud rate	300bps to 115200bps, adjustable
Flow control	None, RTS-CTS, RTS
Parity	None, Odd, Even
Data Bits	None, Odd, Even
Stop Bits	7, 8 (7 is not supported on Modbus RTU protocol)
Experion Integration – Diagnostic	Supported
Maximum Length of User Defined Protocol	532 Bytes
Supported data types on User Defined Protocol	USINT, UINT, UDINT, LINT REAL, LREAL

2.5. ControlEdge 900 Input/output Module

ControlEdge PLC supports various input/output modules. This document provides technical information to configure ControlEdge PLC I/O Modules. The following I/O modules are included in this document.

- Universal Input/output module, 16 channels
- Universal AI – RTD, TC, V 8 Channel
- Analog Input High Level, 16 Channel
- Analog Output,0 to 20mA, 4 Channel
- Analog Output 0 to 20mA, 8 Channel
- Digital Input 120/240 VAC, 16 Channel
- Digital Input 24 VDC, 32 Channel
- Digital Input Contact, 16 Channel
- Digital Input, 120/240 VAC -125VDC, (16 Channel Isolated)
- Digital Output 120/240 VAC, 8 Channel
- Digital Output 24 VDC, 32 Channel
- Digital Relay Output, 8 Channel
- Pulse/Frequency, 4 Channel

2.5.1. Universal Input/output Module (900U01-0100, HW Revision E, Version 02 in Builder)

CAUTION: The RTP 900RTI-XXXX with hardware Rev B or later supports redundant UIO on ControlEdge PLC. Rev A version of the RTP does not support UIO redundancy on ControlEdge PLC.

Universal IO channel can be soft configured as AI with HART, AO with HART, DI or DO.

Item	Specification
Channels	**Non redundant UIO configuration:**16 (Isolate to rack) **Redundant UIO configuration:** 14 (isolate to rack)
Galvanic Isolation	1.5 kV DC Module to Rack (Logic Side) 1.5 kV DC Module to Module
ESCP (Electronic Short Circuit Protection per channel)	620mA re-settable. Protection per channel, over-current on one channel does not impact other channels of UIO
24V Field Supply Voltage	24V DC(Typical) 22VDC(Min) 27V DC(Max)
Load	Max 4.2 Amps per module 500 mA per channel

Analog Input

Item	Specification
Input type	Current (2, 3, or 4 wire devices), with HART Support.
Input Channels	**Non redundant UIO configuration**: 16 Maximum per module (with or without open wire detect) **Redundant UIO configuration:** 14 Maximum per module (with open wire detect)
A/D Converter Resolution	16 Bit
Input Range	0 to 20 mA or 4 to 20 mA **Note**: 0 to 20 mA not available for redundant UIO.
Crosstalk, dc to 60 Hz (channel-to-channel)	58dB
Input Impedance	250 Ω nominal
Maximum Input Voltage (any input referenced to common, no damage)	0 ~ 30V
Hardware accuracy	0.1% of full-scale (at 23.5 ± 2°C) 0.25% of full-scale (-40 to 70°C)
Transmitter Field Power Conditioning	Current limited to 24 mA
Input Filter	First-order low-pass 100Hz
Max HART Multi-drop Connection	One device per channel

Analog Output

Item	Specification
Output Type	4 to 20 mA current loop & 0 to 20 mA current loop with HART supported **Note**: 0 to 20 mA not available for redundant UIO.
Output Channels	6 Maximum per module[1] (with or without open wire detect)
Output Ripple	=< 125 mV peak-to-peak at power line frequency, across 250 Ohm load
Output Temperature Drift	0.5 % of FSR
Output Current Linearity	< 0.05%
Resolution	12 Bit
Calibrated Accuracy	<0.5% of Full Scale (25°C) including linearity
Directly Settable Output Current Range	0 mA to 23 mA
Maximum Resistive Load	500 Ohms
Minimum Resistive Load	100 Ohms
Maximum Output Compliant Voltage (24 V supply = 22 VDC through 28 VDC)	14 VDC
Maximum Open Circuit Voltage	24 VDC
Fail Safe value configuration	Yes • Hold Last Value • Failsafe Value
Max HART Multi-drop Connection	One device per channel

Note:

1. Connecting greater than *100 ohms resistance load will increase maximum AO channel number per UIO module.*See the *'ControlEdge 900 Platform Hardware Planning and Installation Guide HWDOC-X430-en-N'* to determine channel usage in different scenarios.

Digital Input with Open Wire Detect

Item	Specification
Open Voltage	24V
Short Circuit Current	7 mA
Open Contact	15 kΩ > 0.1 W
Closed Contact	5 kΩ > 0.25 W
Short circuit detection:	I > 6mA +/-5%
Closed contact detection:	2.8mA < I < 6mA +/-5%
Lead Breakage Detection	I < 0.9mA +/-5%
Input filter	First-order low-pass 100Hz

Digital Input without Open Wire Detect

Item	Specification
Open Voltage	24V
Closed contact current	7 mA ± 5%, after open state detection
	3.5 mA ± 5%, after closed state detection
Closed contact detection	I > 2.81mA
Open contact detection	I < 1.8mA
Input filter	First-order low-pass 100Hz

Digital Output

Item	Specification
Output Channels	**Non redundant UIO configuration**: 16 Maximum per module (with or without open wire detect) **Redundant UIO configuration**: 14 Maximum per module (with or without open wire detect)
Output Type	Solid state source, short circuit proof
Load Current	0mA Minimum to 0.5A Maximum per channel [1] 4.2 A Maximum per module
On-State Voltage	24 V (typical), load current @ 0.5A
Off-State Voltage	0 VDC
Off-State Leak Current	< 0.1 mA
Fail Safe State configuration	Yes • Hold Last State • Failsafe State

Note:
1. A Universal IO Channel configured for Digital Output can incorrectly report Line Monitoring failures if the load current is less than 10mA. Applications using such light loads need to disable Line Monitoring for those channels to avoid nuisance alarms. The recommended resistive load should be from 48 Ohm to 2.4 kOhm @ 24VDC.

2.5.2. Universal AI (900A01-0202)

The Universal Analog Input module supports up to 8 user-configurable inputs on a per point basis for thermocouple, RTD, Resistance, V, mV, mA. Point-to-point isolation and back-plane isolation are provided. Modules perform analog to digital conversion in synchronization with CPU control execution, eliminating data interchange latency. All analog input modules are processed in parallel, eliminating scan time increases as modules are added. A green blinking status LED on the module indicates when the module is being scanned and red status LED when module diagnostics exist. A user-selectable BURURNOUTN value is supported on a per channel basis. A warning signal is provided for thermocouple inputs to indicate maintenance is needed prior to a sensor failure. A sensor failure signal is also provided.

Item	Specification
Inputs per module	8 (isolated)
Input types	mV, V, T/C, RTD, ohms, mA
Signal Source	See Analog Input Reference Accuracy for range types. Thermocouple with cold junction compensation RTD, PT100 3 wire, 40 ohms balanced maximum Thermocouples: 100 Ohms/Leg 100 (except Low), 500 & 1000 RTD: 100 Ohms/Leg 100 YIS: 100 Ohms/Leg 100-Low RTD & 10-ohm Cu: 10 Ohms/Leg
Input Impedance	10 megohms for T/C and mV inputs; >1 megohm for volts and 250 ohms for mA inputs
Galvanic Input Isolation	400 VDC point to point, 1K VDC to logic RTDs are isolated in pairs
Noise Rejection	Series Mode >60dB. Common Mode >130dB at 120VAC.
Burnout	T/C, mV, V configurable to upscale, downscale, defined value, or none.
Over-range limit	+/- 10% for linear ranges (volts). +/-1% for non-linear ranges (T/C, RTD).
T/C Break Detection	Via current pulse
Faulty thermocouple detection	If greater than 100 ohms, a warning status is provided as an output for the AI block
Accuracy	Factory configured accuracy = ± 0.1 % of range (± 0.2 % of range for 0V to 10V and -10V to 10V) Cold junction accuracy = ± 0.7 °C Reference conditions: Temperature = 25 °C ± 3 °C (77 °F ± 5 °F) Humidity = 45 % to 55 % RH non-condensing Line voltage = Nominal ± 1 % Source resistance = 0 ohm Series mode and common mode = 0 V Frequency = Nominal ± 1 %
Temp. Effect on Accuracy	± 0.01% of full scale per degree Celsius maximum
A/D Converter	One per module
A/D Resolution	15 Bits
Reference Junction Sensing	Via 2 RTDs at top/bottom of module
Update rate	500ms (Analog to Digital Converter per module)
Long term Stability	0.1% per year
Calibration	Data is stored in non-volatile memory Redundant Factory Calibration Individual
Diagnostics	Monitoring of Factory Calibration, 24 VDC supply, and configuration.
Channel Configuration Data	Stored in non-volatile memory

Analog Input Reference Accuracy

Input Type	Range		Reference Accuracy	
Thermocouple inputs	**°F**	**°C**	**°F**	**°C**
B T/C	0 to 105	-18 to 41	NA	NA
	105 to 150	41 to 66	55.0	30.6
	150 to 500	66 to 260	30.0	16.7
	500 to 1000	260 to 538	8.0	4.5
	1000 to 3300	538 to 1815	4.0	2.3
E T/C	-454 to -202	-270 to -130	25.0	14.0
	-202 to 1832	-130 to 1000	2.3	1.3
E (low) T/C	-200 to 1100	-129 to 593	2.0	1.2
J T/C	0 to 1600	-18 to 871	1.2	0.6
J (low) T/C J	20 to 770	-7 to 410	1.0	0.5
T/C	-292 to 32	-180 to 0	1.0	0.5
K T/C	0 to 2400	-18 to 1316	2.0	1.2
K (low) T/C	-20 to 1000	-29 to 538	1.6	0.8
K T/C (mid)** K	0 to 1800	-18 to 982	1.8	1.0
T/C	32 to 2192	0 to 1200	2.0	1.2
Ni-NiMo (NNM68)	32 to 500	0 to 260	2.0	1.2
	500 to 2500	260 to 1371	1.5	0.8
Ni-NiMo (low)	32 to 1260	0 to 682	1.3	0.7
NiMo-NiCo (NM90)	32 to 500	0 to 260	2.0	1.2
	500 to 2500	260 to 1371	1.5	0.7
NiMo-NiCo (low)	32 to 1260	0 to 682	1.3	0.7
N T/C	0 to 2372	-18 to 1300	2.0	1.2
N T/C	0 to 1472	-18 to 800	1.4	0.9
N T/C	32 to 2192	0 to 1200	2.0	1.2
R T/C	0 to 500	-18 to 260	5.0	2.8
	500 to 3100	260 to 1704	2.2	1.2
S T/C	0 to 500	-18 to 260	4.5	2.5
	500 to 3100	260 to 1704	2.2	1.2
T T/C	-300 to 700	-184 to 371	4.0	2.3
	-100 to 700	-73 to 371	2.0	1.2
T (low) T/C W_	-200 to 500	-129 to 260	1.0	0.5
W_{26}	-4 to 600	-20 to 2320	27.0	15.0
	600 to 3600	316 to 1982	4.0	2.3
	3600 to 4200	1982 to 2316	4.2	2.4
W_5 W_{26} T/C *	0 to 600	-18 to 316	3.5	2.0
	600 to 3600	316 to 1982	3.0	1.7
	3600 to 4200	1982 to 2316	3.5	2.0
	0 to 2240	-18 to 1227	2.5	1.4

*W_5W_{26} is also known as type “C” Thermocouple.

** Type K thermocouple (mid-range) has a working range from 75 to 1800 °F, 25 to 982 °C. Input measurements below 75°F or 25°C may cause the input to default to the programmed failsafe value. Use type K low or full ranges if measurements are required outside the mid- working range.

2.5.3. Analog Input High Level, 16 Channel (900A16-0103)

The High Level Analog Input module supports up to 16 user-configurable inputs on a per point basis for Voltage or current. Point-to-point isolation and back-plane isolation are provided. Modules perform analog to digital conversion in synchronization with CPU control execution, eliminating data interchange latency. All analog input modules are processed in parallel, eliminating scan time increases as modules are added.
A green blinking status LED on the module indicates when the module is being scanned. A red status LED when module or channel diagnostics exist.

High Level Analog Input Specifications

Item	Specification
Inputs per module	16 (isolated)
Input types	V, mA
Signal Source	See High Level Analog Input Reference Accuracy for range types.
Input Impedance	>1 megohm for volts and 250 ohms for mA inputs
Galvanic Input Isolation	400 VDC point to point, solid state switching; 1K VDC to logic.
Noise Rejection	Series Mode >31dB Common Mode >90dB at 120VAC
Over-range limit	+/- 10% for linear ranges (volts).
Accuracy	Factory configured accuracy = ± 0.1 % of range. Reference conditions Temperature = 25 °C ± 3 °C (77 °F ± 5 °F) Humidity = 45 % to 55 % RH non-condensing Line voltage = Nominal ± 1 % Source resistance = 0 ohm Series mode and common mode = 0 V Frequency = Nominal ± 1 %
Temp. Effect on Accuracy	±0.01% of full scale per degree Celsius maximum
A/D Converter	One per module
A/D Resolution	±15 Bits
Update rate	100ms (Analog to Digital Converter per module)
Long term Stability	0.1% per year
Calibration	Data is stored in non-volatile memory Redundant Factory Calibration
Diagnostics	Monitoring of Factory Calibration, 24 VDC supply, and configuration.
Channel Configuration Data	Stored in non-volatile memory.

High Level Analog Input Reference Accuracy

Input Type	Range	Reference Accuracy
Milliamperes	4 to 20 mAdc 0 to 20 mAdc	± 0.15% F.S. (mA)** ± 0.15% F.S. (mA)**
**Tolerances for these input types include that of internal Dropping Resistors		
Volts	0 to 1VDC 0 to 2 VDC 0 to 5 VDC 0 to 10 VDC 1 to 5 VDC -1 to 1 VDC -2 to 2 VDC -5 to 5 VDC -10 to 10 VDC	± 0.1% F.S. (mV) ± 0.1% F.S. (mV) ± 0.1% F.S. (mV) ± 0.1% F.S. (mV) ± 0.1% F.S. (mV) ± 0.1% F.S. (mV) ± 0.1% F.S. (mV) ± 0.1% F.S. (mV)

2.5.4. Analog Output, 0 to 20mA, 4 Channel (900B01-0301)

The Analog Output module provides 4 isolated 0 to 21.8 mA outputs that may be scaled by the user to any span within this range on a per output basis.

A green blinking status LED on the module indicates when the module is being scanned. A red status LED when module or channel diagnostics exist. A user specified failsafe value is supported to allow predictable operation in the event communication between the module and the controller is interrupted.

Outputs are updated synchronous with IOM scan time which has minimum value is 500ms.

Item	Specification
Outputs per module	4 (isolated)
Current	0 to 21.8 mA range selectable
Load resistance	750 ohms max
Galvanic Isolation	500VDC Channel to Channel.
Galvanic Isolation from logic	600 VDC
Accuracy	0.1% full scale at reference conditions
Modules per rack	10 max, up to 12 with product ambient temperature de-rating (see figure below)
Minimum current sensing	> 3.5 mA per output
Calibration Data	Data is stored in non-volatile memory. Redundant Factory Calibration, with automatic rejection of Bad version.
Diagnostics	Monitoring of Factory Calibration, Configuration, and +24 VDC power supply.
Output Verification	Feedback to controller that indicates output current flowing.
D/A Resolution	12 bits
Fail Safe State configuration	Yes • Hold Last Value • Failsafe Value
User specified scan rate	It is supported by the slew rate function block. Slew Rate is the maximum rate of change required to drive the output from full OFF (0%-typically 0 mA or 4 mA) to full ON (100%-typically 20mA). The block will convert this to a maximum change of the milliamp output per execution cycle of this block.

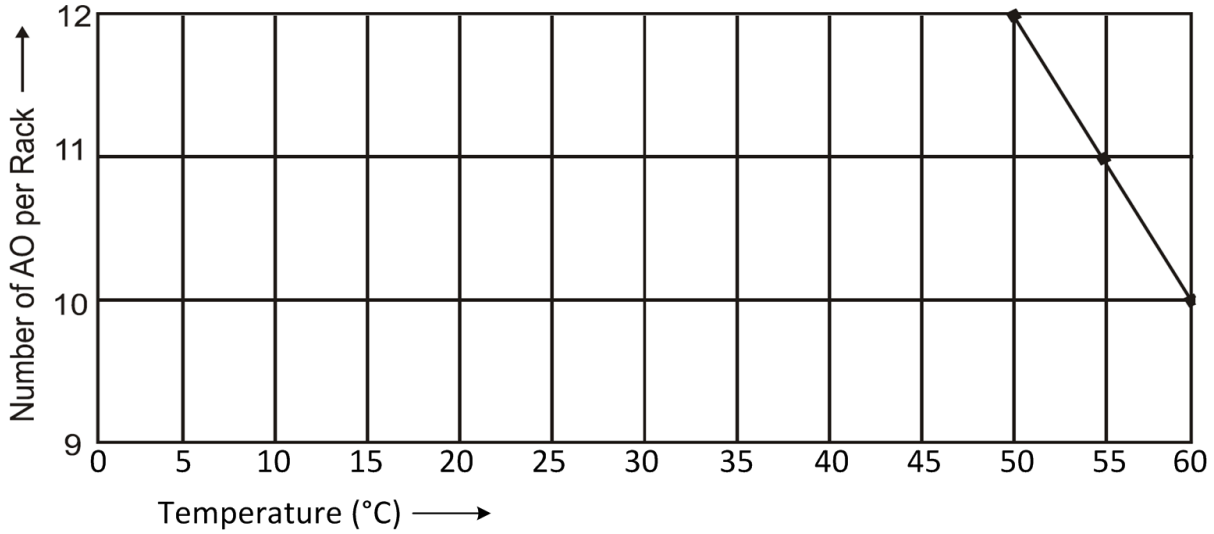

2.5.5. Analog Outputs 0 to 20mA, 8 Channel (900B08-0202)

The Analog Output module provides eight 0 to 21.0 mA outputs that may be scaled by the user to any span within this range on a per output basis. Outputs are isolated in groups of 4 with no isolation between outputs in a group. All points are isolated from controller logic.
A green blinking status LED on the module indicates when the module is being scanned. A red status LED when module or channel diagnostics exist. A user specified failsafe value is supported to allow predictable operation in the event communication between the module and the controller is interrupted.

Outputs are updated synchronous with control execution. A user-specified rate of change limit may be applied to each output when needed by slew rate function block. Requires Euro style 36-terminal terminal block.

Item	Specification
Outputs per module	8, isolated in 2 groups of 4 outputs (1-4, 5-8)
Current	0 to 21.0 mA range selectable
Load resistance	750 ohms max
Galvanic Isolation	500VDC group to group. Groups 1-4, 5-8
Galvanic Isolation from logic	500 VDC
Accuracy	0.1% full scale at reference conditions
Modules per rack	5 max when powered from internal 24V backplane power
Minimum current sensing	> 0.5 mA per output
Calibration Data	Data is stored in non-volatile memory. Redundant Factory Calibration, with automatic rejection of Bad version.
Diagnostics	Monitoring of Factory Calibration, Configuration, and +24 VDC power supply.
Output Verification	Feedback to controller that indicates output current flowing.
D/A Resolution	13+ bits (1 part in 13332)
Fail Safe State configuration	Yes • Hold Last Value • Failsafe Value
User specified scan rate	It is supported by the slew rate function block. Slew Rate is the maximum rate of change required to drive the output from full OFF (0%-typically 0 mA or 4 mA) to full ON (100%-typically 20mA). The block will convert this to a maximum change of the milliamp output per execution cycle of this block.

A DIP switch on the module selects the use of 24V from Rack PS (internal) power or external loop power via a separate 24V DC power source. The as-shipped (default) switch setting is external power.

External Power Source requirements:

Item	Specification
Voltage	Vin: 18 to 36 Vdc
Current	350 mA Per module

2.5.6. Digital Input 120/240 VAC (900G03-0202)

The AC Digital Input modules are externally powered and accommodate two circuit voltages for up to 8 inputs each. Two common terminals are provided for each circuit. AC power applied between the common terminal and an input cause the input to turn ON. There is a green LED state indicator for each channel on the module to indicate when a digital input is ON. Logic in the controller allows the state to be inverted when necessary.

A green blinking status LED on the module indicates when the module is being scanned and red status LED when module diagnostics exist.

Item	Specification
Inputs per module	16 (sinking)
Input Voltage Range	80 VAC to 264 VAC
Peak Voltage	264 VAC
AC Frequency	47 Hz to 63 Hz
Galvanic Isolation	2 groups of 8 inputs (350VAC max.)
ON Voltage Level	75 VAC
OFF Voltage Level	20 VAC
Input Impedance	48 K ohms nominal
Input Current	1 mA nominal @ 120 VAC, 60 Hz 2 mA nominal @ 230 VAC, 50 Hz
Minimum ON Current	0.3 mA
Maximum OFF Current	0.2 mA
OFF to ON response time[1]	4 ms + 1.5-line cycles maximum
ON to OFF response time[1]	4 ms + 2-line cycles maximum

Note:
1. Excluding controllers scan time and excluding transmission time from module to backplane.

Active input De-rating table for ACDI

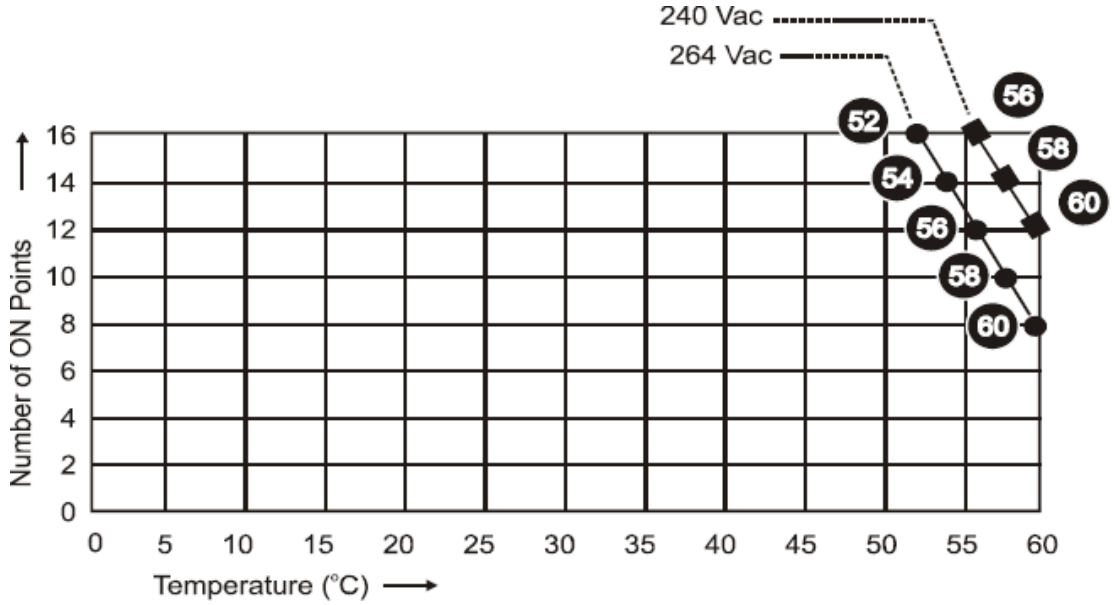

2.5.7. Digital Input 24 VDC (900G32-0301)

The DC Digital Input module provides 32 inputs separated in to 2 groups of 16 channels each. Each group has a pair of screw terminals for the COM connection. DC power applied between the common terminal and an input cause the input to turn ON. There is a green LED state indicator for each channel on the module to indicate when a digital input is ON. A green blinking status LED on the module indicates when the module is being scanned. Red status LED when module diagnostics exist. Logic in the controller allows the state to be inverted when necessary.
Requires Euro style 36-terminal terminal block.

Item	Specification
Inputs per module	32 (sinking)
Input Voltage Range	10 VDC to 32 VDC
Peak Voltage	32 VDC
Galvanic Isolation	2 groups of 16 inputs (30VDC max.)
ON Voltage Level	9.5 VDC minimum
OFF Voltage Level	3.5 VDC maximum
Input Impedance	6.9 K ohms nominal
Input Current	1.7 mA @ 12 VDC 3.5 mA @ 24 VDC nominal
Minimum ON Current	1.0 mA
Maximum OFF Current	0.7 mA
OFF to ON response time[1]	5 ms max
ON to OFF response time[1]	5 ms max
Operating /Storage Temperature	-40 to 70°C /-40 to 85°C Extended Operating Temperature

Note:
1. Excluding controllers scan time and excluding transmission time from module to backplane.

2.5.8. Digital Input Module - Contact type (900G01-0202)

The Contact Closure Digital Input Module is self-powered, providing 15VDC to external switching hardware to close the input loop. A closed external circuit causes current flow to the input to establish an ON state. Logic in the controller allows this state to be inverted when necessary. Four common terminals are provided to simplify field wiring.

There is a green LED state indicator for each channel to indicate when a digital input is ON. A green blinking status LED on the module indicates when the module is being scanned. A red status LED when module diagnostics exist.

Item	Specification
Inputs per module	16 (single-ended)
Voltage Supplied by controller	15 VDC normal
Maximum contact resistance	1000 ohms
Galvanic Isolation	Isolation – Between Field wiring (input or output) and Module
OFF to ON response time[1]	4 ms max
ON to OFF response time[1]	6 ms max
Switching current	2.6 mA nominal

Note:
1. Excluding controllers scan time and excluding transmission time from module to backplane.

2.5.9. Digital Input, 120/240 VAC-125VDC (900G04-0101)

The AC/DC Input Module provides sixteen individually isolated, inputs that are powered externally. Two terminals are provided for each circuit. AC or DC power applied between the input terminals cause the inputs to turn on. There is a green LED state indicator for each channel on the module to indicate when a digital input is ON.
A green blinking status LED on the module indicates when the module is being scanned. A red status LED when module diagnostics exist. Logic in the controller allows the state to be inverted when necessary.
Requires Euro style 36-terminal terminal block.

Item	AC Application	DC Application
Inputs per Module	16	16
Input Voltage Range	80 VAC to 264 VAC	80 VDC to 125 VDC
Peak Voltage	264 VAC	150 VDC
AC Frequency	47 Hz to 63 Hz	NA
Galvanic Isolation	Input to Input & Input to Chassis (350VAC max)	Input to Input & Input to Chassis (350VAC max)
On Voltage Level	75 VAC	75 VDC
Off Voltage Level	20 VAC	30 VDC
Input Impedance	48 k ohms nominal	48 k ohms nominal
Input Current	1 ma nom. @120 VAC, 60 Hz 2 ma nom. @240VAC, 50 Hz	2 ma nom. @125 VDC
Minimum On Current	0.3 mA	0.3 mA
Maximum Off Current	0.2 mA	0.2 mA
Off to On response time[1]	6 ms + 1.5-line cycles max.	6 ms + 2-line cycles max.
On to Off response time[1]	6 ms + 2-line cycles max.	6 ms + 2-line cycles max.
Note: 1. Nominal times excluding controllers scan time and excluding transmission time from module to backplane. DC application		

Active Input De-rating table for AC/DC DI

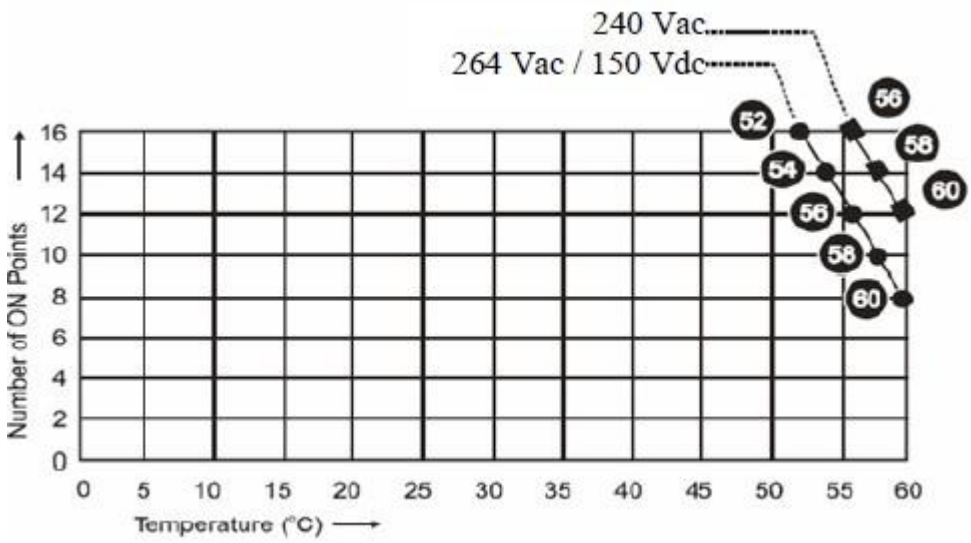

2.5.10. Digital Output 120/240 VAC (900H03-0202)

The AC Digital Output module provides 8 isolated zero switching Triac solid-state outputs. A shorting comb (900J02-0001/900J10-0001) is available for use with barrier type terminal blocks to simplify connections to a common voltage source for all outputs. Each output has a MOV for transient over- voltage protection and a field-replaceable fuse.
There is a green LED state indicator for each channel on the module to indicate when a digital output is ON.
A green blinking status LED on the module indicates when the module is being scanned. Red status LED when module diagnostics exist.

Item	Specification
Outputs per Module	8
Galvanic Isolation	Per output to output, output to logic
Operating Voltage	85 VAC to 240 VAC
Output Type	Triac (zero switching voltage)
Peak Voltage	250 VAC
AC Frequency	47 Hz to 63 Hz
ON Voltage Drop	<2.0 VAC (>0.1 A) <3.0 VAC (<0.1 A)
Transient Over voltage Protection	MOV
Maximum Load Current	2 A per point, 8 A max. per module, resistive load
Maximum Leakage Current	4 mA (240 VAC, 60 Hz) 1.2 mA (100 VAC, 60 Hz) 0.9 mA (100 VAC, 50 Hz)
Maximum Inrush Current	15 A for 10 ms
Minimum Load	50 mA
OFF to ON response time[1]	3 ms + 0.5-line cycle max
ON to OFF response time[1]	3 ms + 0.5-line cycle max
Fail Safe State configuration	Yes • Hold Last State • Failsafe State
Fuses	1 per output, 3.15 A Time-lag. Replacement part: Littelfuse 37413150410

Note:

1. Excluding controllers scan time and excluding transmission time from module to backplane.

2.5.11. Digital Output 24 VDC (900H32-0302)

The DC digital Output module provides 32 outputs separated in to 2 groups of 16 channels each that are powered externally. Each group has a pair of screw terminals for +V and COM connections. The outputs are high side switching (current sourcing) type. Over current protection is provided for all outputs in 4 groups of 8 channels each. In case of short circuit for any output channel, that whole group of 8 is switched off. Power cycling is not required to reset the module.
There is a green LED state indicator for each channel on the module to indicate when a digital output is ON.
A green blinking status LED on the module indicates when the module is being scanned and red status LED when module diagnostics exist. Requires Euro style 36-terminal terminal block.

Item	Specification
Outputs per module	32 (current sourcing, high side).
Galvanic Isolation	2 groups of 16 outputs
Operating Voltage	10.5 to 32 VDC
Output Type	High side driver
Peak Voltage	32 VDC
ON Voltage Drop	0.15 VDC @ 0.5 A load
Overload Protection	Active Current Limiting is integrated into the output driver as 4 groups of 8 channels each. Power cycling is not required to reset the module after a fault condition.
Maximum Load Current	0.5 A per point, 6 A max per channel group 12 A max. per module, resistive load 0.25 A per point incandescent lamp load (5 mH max)
Maximum Leakage Current	0.15mA @ 32 VDC
Maximum Inrush Current	2 A for 10 ms
Minimum Load	0.0 mA
OFF to ON response time[1]	6 ms
ON to OFF response time[1]	6 ms
Fail Safe State configuration	Yes • Hold Last State • Failsafe State
Fuses	Electronic limiting
Operating /Storage Temperature	-40 to 70°C /-40 to 85°C Extended Operating Temperature

Note:

1. Excluding controllers scan time and excluding transmission time from module to backplane.

2.5.12. Relay Output Module, 8 Channel (900H01-0202)

The Relay Output Module provides eight individually isolated, electromechanical relay outputs. Four of the outputs are Form-C, and the other four are Form-A. Output is not fused in the Relay module. Install a fuse for each output at the field device that is appropriate for the load and the wire used.

There is a green LED state indicator for each channel on the module to indicate when a digital output is ON.

A green blinking status LED on the module indicates when the module is being scanned. A red status LED when module or channel diagnostics exist.

Item	Specification
Output channel	4 form A, 4 form C
Output Device	Electromechanical relay
Voltage	120/240VAC, 30 VDC
Current Rating	4A @ 240VAC or 30VDC resistive load 0.5 A @ 240VAC or 30VDC incandescent lamp load
Galvanic Isolation	Relay Output Contact to Relay Output Contact Relay Output Contact to Logic
Max. Leakage Current	1 mA@ 350 VDC
De-rating	Max. outputs at max. load – none Max. modules per rack - none
OFF to ON response time[1]	11 ms max
ON to OFF response time[1]	8 ms max
Expected life (min. operations)	Mechanical at 180 cpm: 5 x 10E7 Electrical: 10E5
Fail Safe State configuration	Yes • Hold Last State • Failsafe State

Note:

1. Excluding controllers scan time and excluding transmission time from module to backplane.

Life expectancy curves (1a1b type)

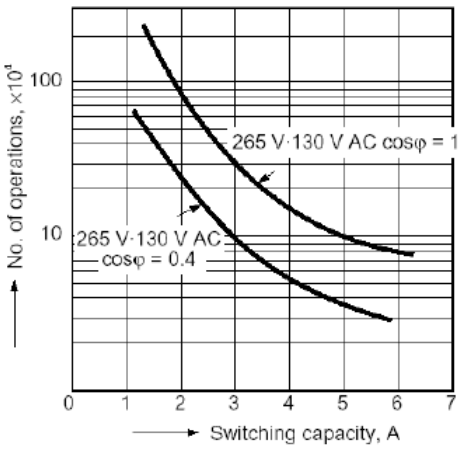

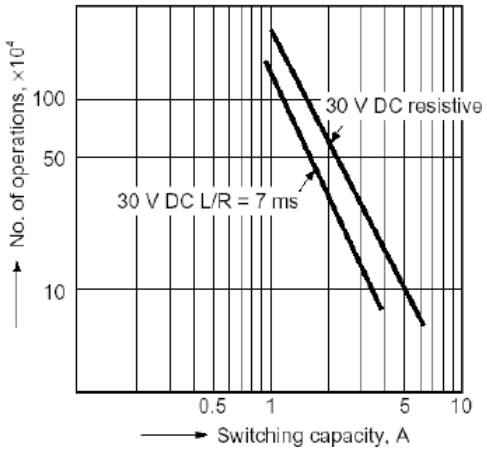

2.5.13. 4 Channel Pulse/Frequency/Quadrature Module – DC Voltage type (900K01-0201)

The 4 Channel Pulse/Frequency/Quadrature* Module provides three different functionalities in the form of Pulse Input, Frequency measurement and Pulse Output. Each of these channels can be configured for any one of these three functions. A green blinking status LED on the module indicates when the module is being scanned. A red status LED when module or channel diagnostics exist.

*Note! Quadrature signal is not supported in current release.

Item	Specification
Input voltage range	0 VDC to 24VDC
Input per module	4
Digital Output type	Open collector, 5 to 24V, 30mA max, used for fast signaling
Pulse Input Specification	
Input Voltage Range	0 VDC to 24 VDC
ON Voltage Level	3.0 VDC minimum
OFF Voltage Level	1.0 VDC maximum
Input Impedance	25K ohm
Frequency	10 KHz maximum
Minimum Pulse Width	3 µsec
Pulse Counter	32 bits
Preset Value	User may configure a preset count value within the range of 32 bit counter
Preset Action	Settable as ON or OFF in HC Designer
Digital Output	• If preset action ON, output turns ON for 1 second. • If preset action OFF, output latches ON, and remains ON until counter reset command.
Counting based on Preset	When the count equals preset value: • If preset action ON, counter is reset and immediately resumes count. • If preset action OFF, counter is not reset and counts beyond preset value.
Counter HOLD	When the HOLD input to the pulse input I/O data type is ON in ControlEdge Builder, the counter holds its current value.
Counter RESET	The counter may be reset only via its I/O data type in ControlEdge Builder, when an OFF to ON transition occurs on the RST input.
Counter Flags	The OVERFLOW flag (STS=33) gets set when the module counter overflows. This flag can be reset when an OFF to ON transition occurs on RST input. Also, the PREI flag is set when the digital output of the module turns ON.
Frequency Input Specifications	
Input Voltage Range	0 VDC to 24 VDC
ON Voltage Level	3.0 VDC minimum
OFF Voltage Level	1.0 VDC maximum
Input Impedance	25k ohm
Frequency	10 HZ minimum 100K HZ maximum
Minimum Pulse width (frequency ranges)	500 µsec (10 Hz to 500 Hz) 50 µsec (10 Hz to 5 KHz) 2.5 µsec (10 Hz to 100 KHz)
Digital Output	ON if put frequency out of range, else OFF

Pulse Output Specifications	
Channels Used	Any one of the channels can be used for Pulse Output. However, the use of a particular channel for outputting pulses will render the particular input channel unusable for either of pulse or frequency input.
Digital Output Type	Open Collector, 5 to 24V, 30 mA max.
Frequency Range	25 Hz – 10KHz
Duty Cycle	Always 50%
Pulse Output Duration	Selectable CONTINUOUS or NUMBERED PULSES.

2.5.14. IOM scan time

I/O module	IOM scan time (in local I/O rack or remote I/O
900U01-0100 - Universal Input/Output Module	10ms
900A01-0202 - Universal Analog Input -RTD, TC, V, 8 Channel	500ms
900A16-0103 - Analog Input High Level, 16 Channel	100ms
900B01-0301 - Analog Output, 0 to 20 mA, 4 Channel	500ms
900B08-0202 - Analog Outputs 0 to 20mA, 8 Channel	500ms
900G03-0202 - Digital Input, 120/240 VAC, 16 Channel	10ms
900G32-0301 - Digital Input, 24 VDC, 32 Channel	10ms
900G01-0202 - Digital Input, contact type, 16 Channel	10ms
900G04-0101 - Digital Input, 120/240 VAC-125VDC, (16 channel Isolated)	10ms
900H03-0202 - Digital Output, 120/240 VAC 8 Channel	10ms
900H32-0302 - Digital Output, 24 VDC 32 Channel	10ms
900H01-0202 - Digital Output - Relay, 8 Channel	10ms
900K01-0201 - Pulse/Freq Input, 4 Channel	10ms

2.6. MasterLogic Input/Output Modules

MasterLogic supports various input/output modules. This document provides technical information to configure MasterLogic I/O Modules.

MasterLogic I/O modules are available in two platforms, ML50 and ML200. The following I/O modules are included in this document.

- Support DHCP, ML I/O adapter will get IP address from PLC downlink through DHCP server
- Diagnostics of module on ControlEdge Builder
- Hot Swap support for all ML200 allowing replacement of modules on process.
- Support for Dual Power Supply with ML200-IOracks (2MLR-E08P and 2MLR-E12P).

ML50 Input/output Modules

- MLE-DC32A: Digital Input, 24 VDC, 32 Channel
- MLE-TN32A: Digital Open Collector Output, 32 Channel
- MLE-DR16A: Digital Input, 24 VDC, 8 Channel & Digital Output, Relay 24 VDC, 8 Channel
- MLF-AD08A: Analog Input, Current/Voltage, 8 Channel
- MLF-AD04C: Analog Input, Current/Voltage, Hi-Resolution, 4 Channel
- MLF-DC04C: Analog Output, Current, Hi-Resolution, 4 Channel
- MLF-AH04A: Analog Input, Current/Voltage, 2 Channel & Analog Output, Current/Voltage, 2 Channel

- MLE-TP32A: Digital Output, Open Collector, 32 Channel
- MLE-RY16A: Digital Output, Relay, 16 Channel
- MLF-DC04A: Analog Output, Current, 4 Channel

For more information, see *MasterLogic 50 Specification Document*.

ML200 Input/output Modules

- 2MLI-D22A: Digital Input, 24 VDC (Sink/Source Type), 16 Channel
- 2MLI-D28A: Digital Input, 24 VDC (Sink/Source Type), 64 Channel
- 2MLQ-TR2A: Digital Output, TR, 0.5A (Sink/Source Type), 16 Channel
- 2MLQ-TR8A: Digital Output, TR, 0.1A (Sink/Source Type), 64 Channel
- 2MLF-AD16A: Analog Input, Current/Voltage,16 Channel

For more information, see *MasterLogic 200 Input/Output Specification and Technical Data Document.*

2.6.1. MLE-DC32A: Digital Input, 24 VDC, 32 Channel

Item	Specification
Input point	32 points
Rated input voltage	DC24V
Rated input current	4mA
Operation voltage range	DC20.4~28.8V (ripple rate < 5%)
On Input Voltage/Current	DC19V or higher / 3 mA or higher
Off Input Voltage/Current	DC6V or lower / 1 mA or lower
Input resistance	5.6 kΩ
Response Time	Off -> On:1ms/3ms/5ms/10ms/20ms/70ms/100ms (set by CPU parameter) Default: 3ms
	On -> Off:1ms/3ms/5ms/10ms/20ms/70ms/100ms (set by CPU parameter) Default: 3ms
Insulation resistance	10MΩ or more by megger
Common Method	32 point / COM
Internal current consumption	50mA
Weight	60g

MLE-DC32A Input Wiring Diagram

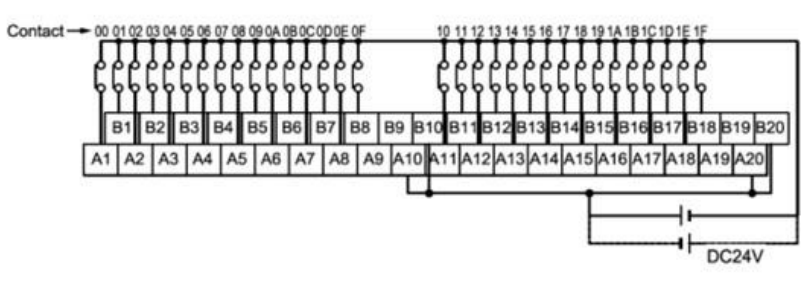

2.6.2. MLE-TN32A: Digital Open Collector Output, 32 Channel

MLE-TN32A – ML 50: Open Collector Output (32 ch)	
Item	**Specification**
Input point	32 points
Rated input voltage	DC12/24V
Load voltage range	DC10.2V~26.4V
Max load current	0.2A/1 point, 2A/COM
Off leakage current	0.1 mA or less
Max voltage drop(On)	DC 0.4A
Response Time	Off -> On:1ms or less
	On -> Off:1ms or less (Rated load, resistive loade)
Isolation resistance	10MΩ or more by megger
Common Method	32 point / COM
Internal current consumption	120mA
External Power Supply	Voltage: DC12/24V ± 10% (ripple voltage 4 Vp-p)
	Current:20mA or less (DC 24V connection)
Weight	104g

MLE-TN32A Output Wiring Diagram
(TG7-1H40S)

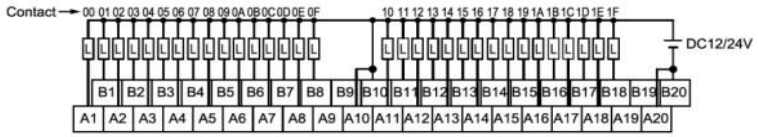

2.6.3. MLE-DR16A: Digital Input, 24 VDC, 8 Channel & Digital Output, Relay 24 VDC, 8 Channel

MLE-DR16A -ML 50: DC24V Input (8 ch) & Relay Output (8 ch)	
Item	**Specification**
DC Input	
Input point	8 points
Insulation method	Photo coupler
Rated input voltage	DC24V
Rated input current	4 mA
Operation voltage range	DC20.4~28.8V (ripple rate < 5%)
On Voltage/Current	DC19V or higher / 3 mA or higher
Off Voltage/Current	DC6V or lower / 1 mA or lower
Input resistance	5.6 kΩ
Response Time	Off -> On:1ms/3ms/5ms/10ms/20ms/70ms/100ms (set by CPU parameter) Default: 3ms
	On -> Off:1ms/3ms/5ms/10ms/20ms/70ms/100ms (set by CPU parameter) Default: 3ms
Common Method	8 point / COM
Weight	81g

Relay output		
Output point	8 points	
Insulation method	Relay Insulation	
Rated input voltage/current	DC 24V 2A (resistive load)/AC 220V 2A(Cos Ø = 1), 5A/COM	
Min. load voltage/current	DC 5V 1mA	
Max. load current	AC250V, DC125V	
Off leakage current	0.1mA (AC220V, 60Hz)	
Max. on/off frequency	3600 times/hr	
Surge absorber	None	
Service life	Mechanical	20 million times or more
	Electrical	Rated load voltage / current 100,000 times or more
		AC 200V / 1.5A, AC 240V / 1A(Cos Ø = 0.7)100,000 times or more
		AC 200V / 1.5A, AC 240V / 0.5A(Cos Ø = 0.35)100,000 times or more
		DC 24V / 1A, DC 100V / 0.1A(L/R = 7 ms)100,000 times or more
Response Time	Off -> On:10ms or less	
	On -> Off:12ms or less	
Common Method	8 point / 1COM	
Internal Current consumption(mA)	280mA	
Operation indicator	Output On, LED On	
External connection method	9-pin terminal block connector	

Wiring	
8-point DC input	8-point Relay Output
AWG#22(0.3mm²) or greater	AWG#22(0.3mm²) or greater

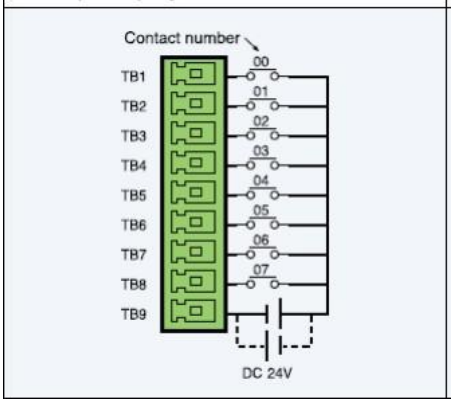

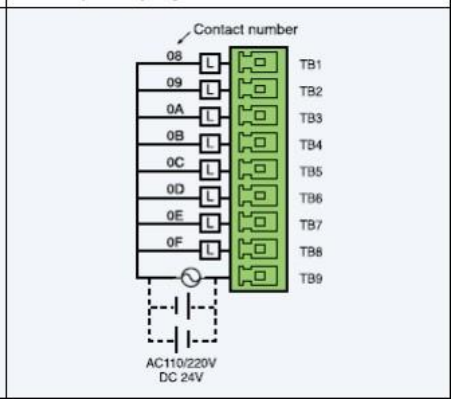

2.6.4. MLF-AD08A: Analog Input, Current/Voltage, 8 Channel

MLF-AD08A – ML 50: Current/Voltage Input (8 ch)				
Item	**Specification**			
	Voltage Input		**Current Input**	
Analog input	DC 1 ~ 5 V		DC 4 ~ 20 mA	
	DC 0 ~ 5 V		DC 0 ~ 20 mA	
	DC 0 ~ 10 V		(Input Resistance 250 Ω)	
	(Input Resistance: 250 MΩ min.)			
Digital output	1) Voltage Input			
	Analog input Digital output	DC 1 ~ 5 V	DC 0 ~ 5 V	DC 0 ~ 10 V
	Unsigned Value	0~4000		
	Signed Value	-2000~2000		
	Precise Value	100~500	0~500	0~1000
	Percentile Value	0~1000		
	(2) Current Input			
	Analog input Digital output	4~20 mA		0~20 mA
	Unsigned Value	0~4000		
	Signed Value	-2000~2000		
	Precise Value	400~2000		0~2000
	Percentile Value			
	12-bit binary data			
Resolution	Analog input range		Analog input range	
	1 ~ 5 V	1.25 mV	4 ~ 20 mA	5 μA
	0 ~ 5 V	1.25 mV	0 ~ 20 mA	5 μA
	0 ~ 10 V	2.5 mV		
Max. conversion speed	1.5 ms/ channel			
Absolute max. input	±15 V		±25 mA	
Analog input points	8 channels/module			
Insulation method	Photo-coupler insulation between I/O terminal and power supply			
Terminal connected	11-point terminal			
I/O points Occupied	Fixed point assignment: 64			
Current Consumption	DC5V	105mA		
	DC24V	85mA		
Weight	70g			

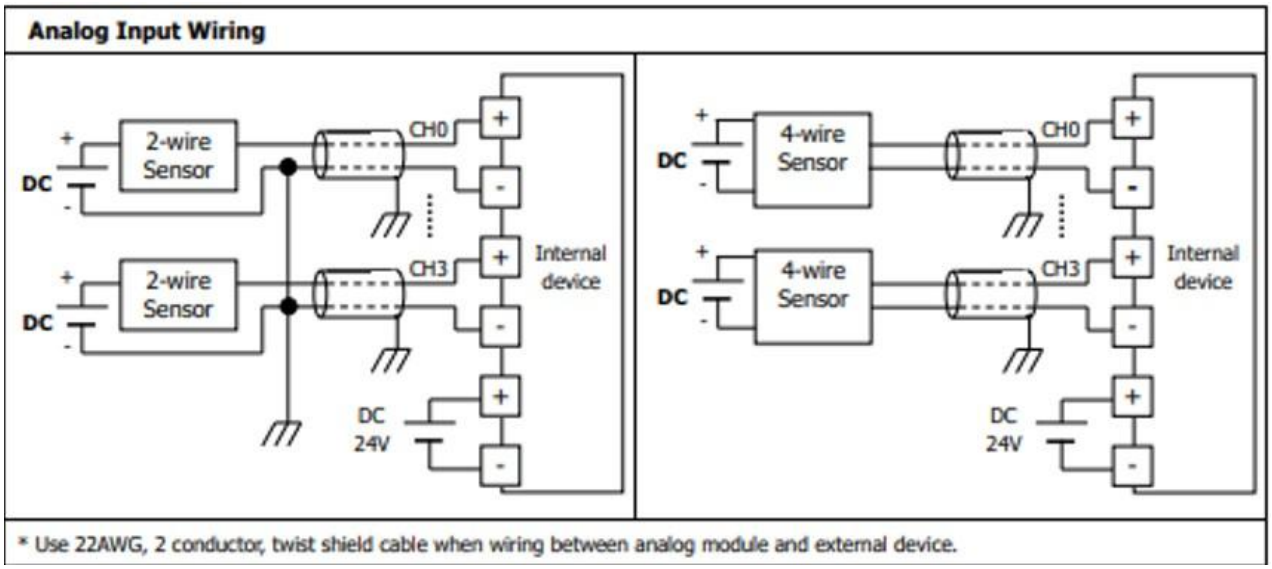

2.6.5. MLF-AD04C: Analog Input, Current/Voltage, High Voltage, 4 Channel

MLF-AD04C – ML 50: Current/Voltage Input (4 ch), Hi-resolution					
Item	**Specification**				
	Voltage Input		**Current Input**		
Analog input	DC 1 ~ 5 V		DC 4 ~ 20 mA		
	DC 0 ~ 5 V		DC 0 ~ 20 mA		
	DC 0 ~ 10 V		(Input Resistance 250 Ω)		
	DC -10 ~ 10 V				
	(Input Resistance: 1 MΩ min.)				
Digital data	1) Voltage Input				
	Analog input Digital output	DC 1 ~ 5 V	DC 0 ~ 5 V	DC 0 ~ 10 V	DC -10 ~ 10 V
	Unsigned Value	0~16000			
	Signed Value	-8000~8000			
	Precise Value	100~5000	0~5000	0~10000	-10000~10000
	Percentile Value	0~10000			
	(2) Current Input				
	Analog input Digital output	4~20 mA			0~20 mA
	Unsigned Value	0~16000			
	Signed Value	-8000~8000			
	Precise Value	4000~20000			0~20000
	Percentile Value	0~10000			

	16-bit binary value (data: 14 bits)				
Resolution	Analog input range	Resolution (1/16000)		Analog input range	Resolution (1/16000)
	1 ~ 5 V	0.250 mV		4 ~ 20 mA	1.0 μA
	0 ~ 5 V	0.3125 mV		0 ~ 20 mA	1.25 μA
	0 ~ 10 V	0.625 mV			
	-10 ~ 10 V	1.250 mV			
Max. conversion speed	1.0 ms/ channel				
Absolute max. input	±15 V		±3 mA		
Analog input points	4 channels/module				
Isolation method	Photo-coupler insulation between input terminal and PLC power (no insulation between channels)				
Terminal connected	15-point terminal block				
I/O points Occupied	Fixed point assignment: 64				
Current Consumption	DC 5V	110mA			
	DC 24V	100mA			
Weight	120g				

Analog Input Wiring

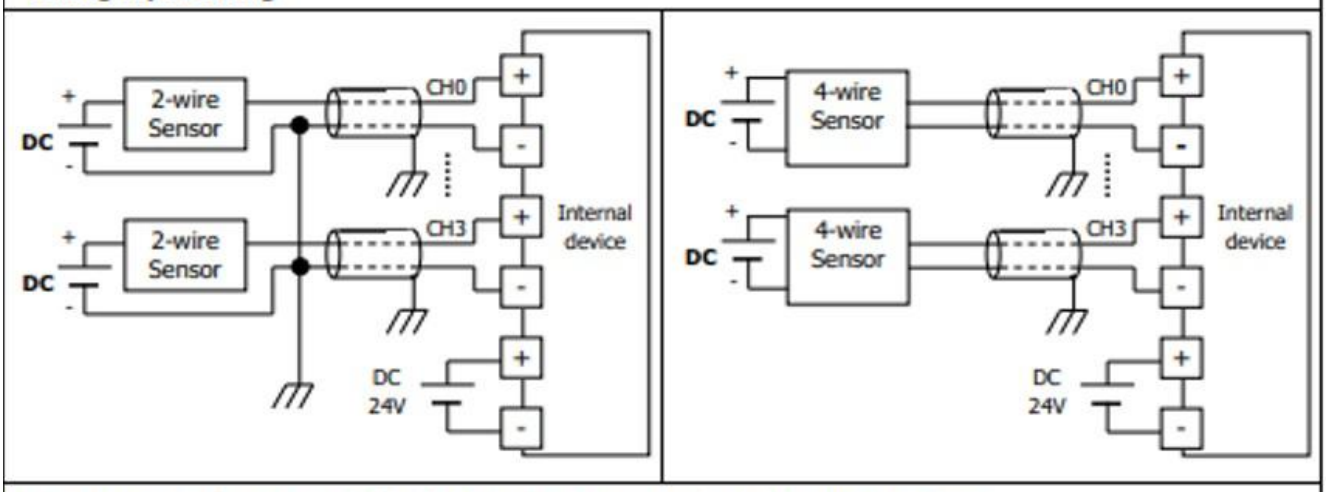

* Use 22AWG, 2 conductor, twist shield cable when wiring between analog module and external device.

2.6.6. MLF-DC04C: Analog Output, Current, High Voltage, 4 Channel

MLF-DC04C – ML 50: Current Output (4 ch), Hi-resolution			
Item	**Specification**		
Analog range	DC 4 ~ 20 mA		
	DC 0 ~ 20 mA		
	(Input Resistance <=600 MΩ)		
Digital data	Analog input Digital output	4~20 mA	0~20 mA
	Unsigned Value	0~16000	
	Signed Value	-8000~8000	
	Precise Value	4000~20000	0~20000
	Percentile Value	0~10000	
Resolution	Analog input range	Resolution (1/16000)	
	4 ~ 20 mA	1.0 μA	
	0 ~ 20 mA	1.25 μA	
Max. conversion speed	1.0 ms/ channel		
Accuracy	±0.2% or less (when ambient temperature is 25 C ±5 C) ±0.3% or less (when ambient temperature is 0 C ~ 55 C)		
Analog output points	4 channels/module		
Insulation method	Photo-coupler insulation between input terminal and PLC power (no insulation between channels)		
Terminal connected	11-point terminal block		
I/O points Occupied	Fixed point assignment: 64		
Current Consumption	DC 5V	75mA	
	DC 24V	170mA	
Weight	118g		

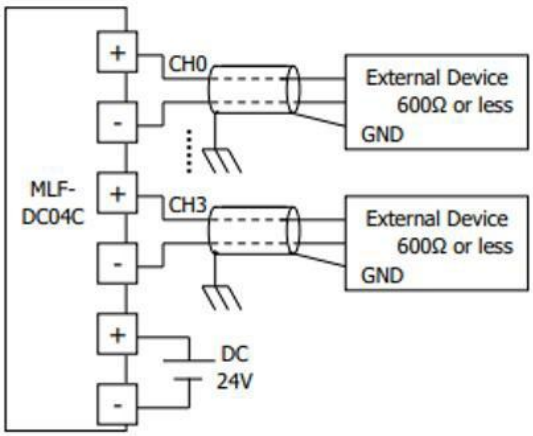

2.6.7. MLF-AH04A: Analog Input, Current/Voltage, 2 Channel & Analog Output, Current/Voltage, 2 Channel

MLF-AH04A – ML 50: Current/Voltage Input (2 ch) & Current/Voltage Output (2 ch)				
Item	**Specification**			
Analog channel	**Input-2channels**		**Output-2channels**	
Analog range	DC 1 ~ 5 V	DC 4 ~ 20 mA	DC 1 ~ 5 V	DC 4 ~ 20 mA
	DC 0 ~ 5 V	DC 0 ~ 20 mA	DC 0 ~ 5 V	DC 0 ~ 20 mA
	DC 0 ~ 10 V	(Input Resistance 250 Ω)	DC 0 ~ 10 V	(Load Resistance <=510Ω)
	(Input Resistance 1MΩ min)		(Load Resistance >=2kΩ)	
Digital data	1) Voltage Input/output			
	Analog input / Digital output	DC 1 ~ 5 V	DC 0 ~ 5 V	DC 0 ~ 10 V
	Unsigned Value	0~4000		
	Signed Value	-2000~2000		
	Precise Value	100~500	0~500	0~1000
	Percentile Value	0~1000		
	(2) Current Input/output			
	Analog input / Digital output	4~20 mA		0~20 mA
	Unsigned Value	0~4000		
	Signed Value	-2000~2000		
	Precise Value	400~2000		0~2000
	Percentile Value			
	12-bit binary data			
Resolution	Analog input range		Analog input range	
	1 ~ 5 V	1.25 mV	4 ~ 20 mA	5 μA
	0 ~ 5 V	1.25 mV	0 ~ 20 mA	5 μA
	0 ~ 10 V	2.5 mV		
Max. conversion speed	1.5 ms/ channel			
Max. absolute input	±15 V/±25 mA			
Accuracy	±0.5% or less			
Insulation method	Photo-coupler insulation between I/O terminal and power supply			
Terminal connected	11-point terminal			

I/O points Occupied	Fixed point assignment: 64			
Current Consumption	DC5V	110mA		
	DC24V	130mA		
Weight	70g			

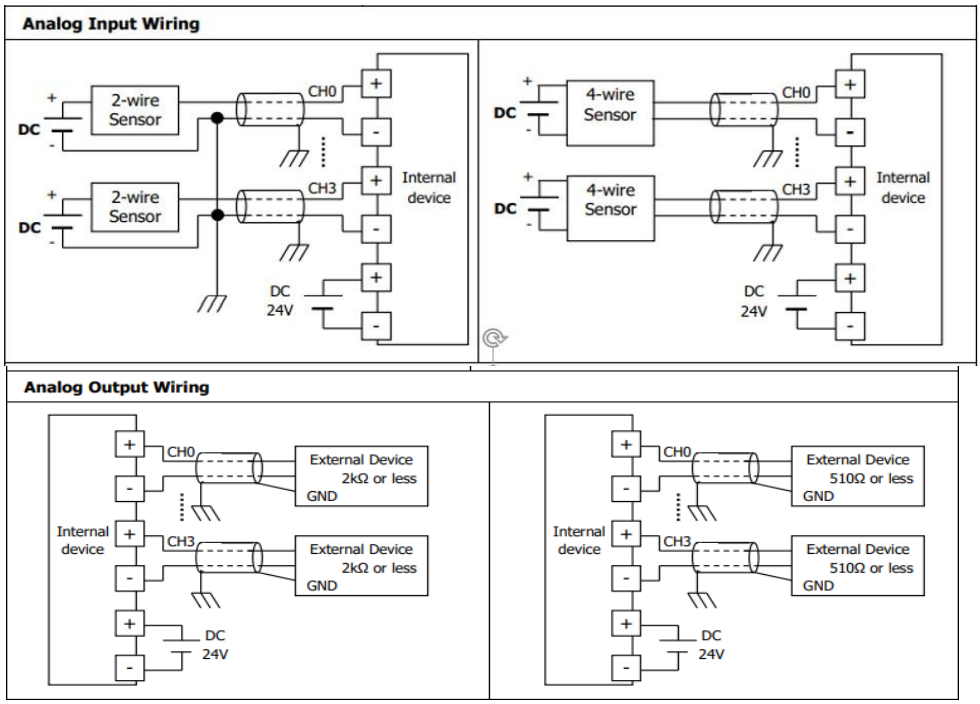

2.6.8. MLE-TP32A: Digital Output, Open Collector, 32 Channel

MLE-TP32A – ML 50: Open Collector Output (32ch)-Source	
Item	**Specification**
Input point	32 points
Rated input voltage	DC12/24V
Load voltage range	DC10.2V~26.4V
Max load current	0.2A/1 point, 2A/COM
Off leakage current	0.1 mA or less
Max voltage drop (On)	DC 0.4A
Response Time	Off -> On:1ms or less
	On -> Off:1ms or less (Rated load, resistive load)
Insulation resistance	10MΩ or more by megger
Common Method	32 point / COM
Internal current consumption	120mA
External Power Supply	Voltage: DC12/24V ± 10% (ripple voltage≤4 Vp-p)
	Current:20mA or less (DC 24V connection)
Weight	100g

2.6.9. MLE-RY16A: Digital Output, Relay, 16 Channel

MLE-RY16A – ML 50: Relay Output (16 ch)		
Item	**Specification**	
Output point	16 points	
Insulation method	Relay Insulation	
Rated input voltage/current	DC 24V 2A (resistive load)/AC 220V 2A(Cos Ø = 1), 5A/COM	
Min. load voltage/current	DC 5V 1mA	
Max. load current	AC250V, DC125V	
Off leakage current	0.1mA (AC220V, 60Hz)	
Max. on/off frequency	3600 times/hr.	
Surge absorber	None	
Service life	Mechanical	20 million times or more
	Electrical	Rated load voltage / current 100,000 times or more
		AC 200V / 1.5A, AC 240V / 1A(Cos Ø = 0.7)100,000 times or more
		AC 200V / 1.5A, AC 240V / 0.5A(Cos Ø = 0.35)100,000 times or more
		DC 24V / 1A, DC 100V / 0.1A(L/R = 7 ms)100,000 times or more
Response Time	Off -> On:10ms or less	
	On -> Off:12ms or less	
Common Method	8 point / 1COM	
Internal Current consumption(mA)	420mA	
Operation indicator	Output On, LED On	
External connection method	9-pin terminal block connector X2	
Weight	160g	

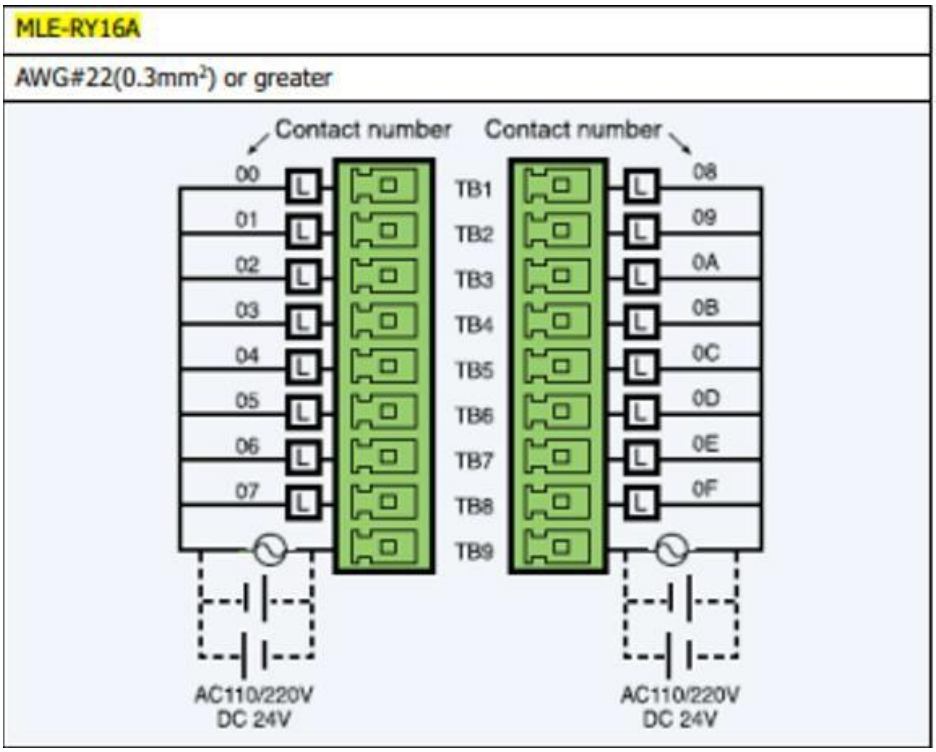

2.6.10. MLF-DC04A: Analog Output, Current, 4 Channel

MLF-DC04A – ML 50: Current Output (4 ch)			
Item	**Specification**		
	Current Output		
Analog input	DC 4 ~ 20 mA		
	DC 0 ~ 20 mA		
	(Load Resistance <=510 Ω)		
Digital data	Analog input Digital output	4~20 mA	0~20 mA
	Unsigned Value	0~4000	
	Signed Value	-2000~2000	
	Precise Value	400~2000	0~2000
	Percentile Value	0~1000	
	Data format of digital input is set by user program or I/O parameter		
Resolution	Analog input range	Resolution (1/4000)	
	4 ~ 20 mA	5 μA	
	0 ~ 20 mA	5 μA	
Max. conversion speed	1.0 ms/ channel		
Absolute max. output	±25mA		
Accuracy	±0.5% or less		
Analog output points	4 channels/module		
Insulation method	Photo-coupler insulation between input terminal and PLC power (no insulation between channels)		
Terminal connected	11-point terminal block		
I/O points Occupied	Fixed point assignment: 64		
Current Consumption	DC 5V	110mA	
	DC 24V	120mA	
Weight	124g		

2.6.11. 2MLI-D22A: Digital Input, 24 VDC (Sink/Source Type), 16 Channel

2MLI-D22A - DC24V Input Module (Sink/Source Type), 16 Channel	
Item	**Specification**
Input point	16 points
Isolation method	Photo coupler isolation
Rated input voltage	DC24V
Rated input current	4 mA
Operation voltage range	DC20.4~28.8V (ripple rate < 5%)
Input Derating	None

On Voltage/Current	DC19V or higher / 3 mA or higher
Off Voltage/Current	DC11V or lower / 1.7 mA or lower
Input resistance	About 5.6 kΩ
Response Time	Off -> On:1ms/3ms/5ms/10ms/20ms/70ms/100ms (set by CPU parameter) Default: 3ms
	On -> Off:1ms/3ms/5ms/10ms/20ms/70ms/100ms (set by CPU parameter) Default: 3ms
Isolation voltage	AC560V rms/3 Cycle (altitude 2000m)
Isolation resistance	10mΩ or more by megger
Common Method	16 point / COM
Proper cable size	Twisted pair 0.3~0.75 mm² (external diameter 2.8mm or less)
Proper compressed terminal	R1.25-3 (not allowed to use a sleeve attached compressed terminal.)
Current consumption (㎃)	30mA
Operation indicator	Input On, LED On
External connection method	18-point terminal block connector (M3 X 6 screw)
Weight	0.12 kg
Hot Swap Support	Yes

2.6.12. 2MLI-D28A: Digital Input, 24 VDC (Sink/Source Type), 64 Channel

2MLI-D28A - DC24V Input Module (Sink/Source Type) 64 Channel	
Item	**Specification**
Input point	64 points
Isolation method	Photo coupler isolation
Rated input voltage	DC24V
Rated input current	About 4 mA
Operation voltage range	DC20.4~28.8V (ripple rate < 5%)
Input Derating	Yes
On Voltage/Current	DC19V or higher / 3 mA or higher
Off Voltage/Current	DC11V or lower / 1.7 mA or lower
Input resistance	About 5.6 kΩ
Response Time	Off -> On:1ms/3ms/5ms/10ms/20ms/70ms/100ms (set by CPU parameter) Default: 3ms
	On -> Off:1ms/3ms/5ms/10ms/20ms/70ms/100ms (set by CPU parameter) Default: 3ms
Isolation voltage	AC560V rms/3 Cycle (altitude 2000m)
Isolation resistance	10mΩ or more by megger
Common Method	32 point / COM
Proper cable size	0.3 mm²
Current consumption(mA)	60mA
Operation indicator	Input On, LED On (32-point LED On by switch operation)
External connection method	40-point connector×2ea
Weight	0.15 kg
Hot Swap Support	Yes

2.6.13. 2MLQ-TR2A: Digital Output, TR, 0.5A (Sink Type), 16 Channel

2MLQ-TR2A – Transistor Output Module (Sink Type), 16 Channel	
Item	**Specification**
Output point	16 points
Isolation method	Photo coupler isolation
Rated load voltage	DC12/24V
Load voltage range	DC 10.2 ~ 26.4V
Max. load current	0.5A / 1 point, 4A / 1COM
Off leakage current	0.1mA or less
Max. inrush current	4A / 10 ms or less
Max. voltage drop (On)	DC 0.3V or less
Surge absorber	Zener diode (complies with IEC 61006-6-2)
Fuse	4A×2 (not replaceable) (Fuse cap.:50A) Common fuse for entire module
Fuse disconnection display	Yes (If a fuse is burnt out, it transfers a signal to CPU and LED is on) If external power supply is off, fuse status is not detected.
Response Time	Off -> On:1ms/3ms/5ms/10ms/20ms/70ms/100ms (set by CPU parameter) Default: 3ms
	On -> Off:1ms/3ms/5ms/10ms/20ms/70ms/100ms (set by CPU parameter) Default: 3ms
Common Method	16 point / 1COM
Current consumption(mA)	70mA (when all points On)
External Power Supply	Voltage DC12/24V ± 10% (ripple voltage 4 Vp-p or less)
	Current 10mAor less (DC24V connection)
Operation indicator	Output On, LED On
External connection method	18-point terminal block connector
Weight	0.11 kg
Hot Swap Support	Yes

2.6.14. 2MLQ-TR8A: Digital Output, TR, 0.1A (Sink Type), 64 Channel

2MLQ-TR8A – Transistor Output Module (Sink Type), 64 Channel	
Item	**Specification**
Output point	64 points
Isolation method	Photo coupler isolation
Rated load voltage	DC12/24V
Load voltage range	DC 10.2 ~ 26.4V
Max. load current	0.1A / 1 point, 2A / 1COM
Off leakage current	0.1mA or less
Max. inrush current	0.7A / 10 ms or less
Max. voltage drop (On)	DC 0.2V or less
Surge absorber	Zener diode (complies with IEC 61006-6-2)

Response Time	Off -> On:1ms or less
	On -> Off:1ms or less (rated load, resistive load)
Common Method	16 point / 1COM
Current consumption(mA)	230mA (when all points on)
External Power Supply	Voltage DC12/24V ±10% (ripple voltage 4 Vp-p or less)
	Current 10mAor less (DC24V connection)
Operation indicator	Input On, LED On (32-point LED On by switch operation)
External connection method	40 Pin Connector×2ea
Proper cable size	0.3 mm²
Weight	0.15 kg
Hot Swap Support	Yes

2.6.15. 2MLF-AD16A: Analog Input, Current/Voltage,16 Channel

2MLF-AD16A – 16 channel Voltage/Current Input Module					
Item	**Specification**				
	Voltage Input		**Current Input**		
Analog input	DC 1 ~ 5 V		DC 4 ~ 20 mA		
	DC 0 ~ 5 V		DC 0 ~ 20 mA		
	DC 0 ~ 10 V		(Input Resistance 250 Ω)		
	DC -10 ~ 10 V				
	(Input Resistance: 1 MΩ min.)				
Analog input range setting	• Current input or Voltage input can be selected through the external switch. • Analog input range can be selected through user program or I/O parameter. • Respective input ranges can be set based on channels.				
Digital output	1) Voltage Input				
	Analog input / Digital output	DC 1 ~ 5 V	DC 0 ~ 5 V	DC 0 ~ 10 V	DC -10 ~ 10 V
	Unsigned Value	0~16000			
	Signed Value	-8000~8000			
	Precise Value	1000~5000	0~5000	0~10000	-10000~10000
	Percentile Value	0~10000			
	(2) Current Input				
	Analog input / Digital output	4~20 mA			0~20 mA
	Unsigned Value	0~16000			
	Signed Value	-8000~8000			
	Precise Value	4000~20000			0~20000
	Percentile Value	0~10000			
	16-bit binary value (data: 14 bits) Format of digital output data can be set through user program or S/W package based on channels.				

Maximum resolution	Analog input range	Resolution (1/16000)		Analog input range	Resolution (1/16000)
	1 ~ 5 V	0.250 mV		4 ~ 20 mA	1.0 μA
	0 ~ 5 V	0.3125 mV		0 ~ 20 mA	1.25 μA
	0 ~ 10 V	0.625 mV			
	-10 ~ 10 V	1.250 mV			
Accuracy	±0.2% or less (when ambient temperature is 25 C ±5 C) ±0.3% or less (when ambient temperature is 0 C ~ 55 C)				
Max. conversion speed	500 μs/ channel				
Absolute max. input	±15 V		±30 mA		
Analog input points	16 channels				
Isolation method	Photo-coupler insulation between input terminal and PLC power (no insulation between channels)				
Terminal connected	32-point terminal				
I/O points Occupied	Fixed point assignment: 64, Variable point assignment: 16				
Current Consumption	330mA				
Weight	115g				
Hot Swap Support	Yes				

2.7. MasterLogic EtherNet/IP Adapters

EtherNet/IP adapters is used for communication between the ControlEdge 900 controller and MasterLogic I/O modules.

- ML50 EtherNet/IP adapter: MEL-BSSRT (Electrical/Copper) Firmware version V1.7
- ML200 EtherNet/IP adapter: 2MLL-DBDT (Electrical/Copper) Firmware version V1.3

This section explains general specifications and communication information for the MasterLogic EtherNet/IP adapters

2.7.1. MEL-BSSRT EtherNet/IP adapter for ML50 I/O

General specifications

Item	Specification				Standard
Ambient temperature	0 to 55° C				-
Storage temperature	-25 to 70° C				-
Ambient humidity	5 to 95% RH, non-condensing				-
Storage humidity	5 to 95%RH, non-condensing				-
Vibration resistance	Occasional vibration				-
	Frequency	Acceleration	Amplitude	times	IEC61131- 2
	5 ≤ f< 8.4 Hz	-	3.5 mm	10 times in each direction for X, Y, Z	
	8.4≤ f≤ 150 Hz	9.8 m/s2 (1G)	-		

Item	Specification				Standard
	Continuous vibration				
	Frequency	Acceleration	Amplitude		
	5 ≤ f< 8.4 Hz	-	1.75 mm		
	8.4≤ f≤ 150 Hz	4.9 m/s2 (0.5G)	-		
Shock resistance	• Peek acceleration: 147 m/s2(15G) • Duration: 11ms • Half-sine, 3 times each direction per each axis				IEC61131- 2
Noise resistance	Square Wave Impulse noise	AC: ±1500 V DC: ±900V			Internal Standard
	Electrostatic discharge	Voltage: 4kV (Contact discharge)			IC61131-2 IEC61000-4-2
	Radiated electromagnetic field noise	80 to 1000 MHz, 10 V/m			IC61131-2 IEC61000- 4-3
	Fast transient burst noise	Segment	Power supply module	Digital/analog input/output communication interface	IC61131-2 IEC61000- 4-4
		Voltage	2 kV	1 kV	
Environment	Free from corrosive gasses and excessive dust				-
Altitude	Up to 2,000 ms				-
Pollution degree	Less than equal to 2				-
Cooling	Air-Cooling				-

Communication specifications

Item	MEL-BSSRT	
Transmission Specification	Transmission speed	100/1000Mbps
	Transmission method	Base band
	Maximum distance between nodes	Electric: 100m@CAT5E or higher Optical: 2km@100Mbps.MM , 550m@1Gbps.MM ,5km~80km@ SM
	Send media	Electric: Category 5E or higher STP (Shielded Twisted pair) cable Optical: Multi-mode (MMF)/Single mode (SMF) cable.
	Maximum protocol size	1500 bytes
	Communication network access method	CSMA/CD
	Frame error check method	CRC32
Max. Load	Ethernet: 10,000pps	

Item	MEL-BSSRT	
Topology	Star, Ring, and Linear (between adapters)	
Diagnosis function	IP collision detection function, self-diagnosis service, diagnosis using SoftMaster.	
IP setting method	Rotary switch, SoftMaster, BOOTP;	
IP setting range	ML adapter only support StaticIP, 1. The default IP address is 172.168.0.XX, the XX is configured on 1x and 10x rotary switches on the adapter. 2. The range of the IP address is from 1 to 99. 3. The IP address cannot be in the same network subnet as ETH1 and ETH2. 4. If you want to change to the other subnet (for example:10.10.10. XX), should set 1x and 10x rotary switches to 0(zero) and use additional software:SoftMaster.	
External connecting terminal	USB mini B: PADT connection RJ45, SFP: PADT connection, data communication	
Status indication LED	RUN, RMS, RNS, RELAY, LINK/ACT1, LINK/ACT2	
Parameter setting	SoftMaster (USB, Ethernet port)	
Device file	EDS file (Only EtherNet/IP)	
Maximum number of modules to be installed	8ea	
I/O Refresh size	Max input refresh size	512 Byte
	Max output refresh size	512 Byte
Protocol Specifications (EtherNet/IP)	Data processing unit	Byte(8bit)
	Max read data size	Non periodic tag: 1,400 Byte Non periodic object: 1,024 Byte Cycle 1,024 Byte
	Max write data size	Non periodic tag: 1,400 Byte Non periodic object: 1,024 Byte Cycle 1,024 Byte
	Available communication type	Connection type (Cycle) messages: Class1 Non connection type (Non periodic) message: Tag, Object
	Maximum number of connections	Connection type (Cycle) :10 Non connection type (Non periodic) message (Tag, Object):10

2.7.2. 2MLL-DBDT EtherNet/IP adapter for ML200 I/O

General specifications

Item	Specification				Standard
Ambient temperature	0 to 55° C				-
Storage temperature	-25 to 70° C				-
Ambient humidity	5 to 95% RH, non-condensing				-
Storage humidity	5 to 95%RH, non-condensing				-
Vibration resistance	Occasional vibration				-
	Frequency	Acceleration	Amplitude	times	IEC61131- 2
	5 ≤ f< 8.4 Hz	-	3.5 mm	10 times in each direction for X, Y, Z	
	8.4≤ f≤ 150 Hz	9.8 m/s2 (1G)	-		
	Continuous vibration				
	Frequency	Acceleration	Amplitude		
	5 ≤ f< 8.4 Hz	-	1.75 mm		
	8.4≤ f≤ 150 Hz	4.9 m/s2 (0.5G)	-		
Shock resistance	• Peek acceleration: 147 m/s2(15G) • Duration: 11ms • Half-sine, 3 times each direction per each axis				IEC61131- 2
Noise resistance	Square Wave Impulse noise	AC: ±1500 V DC: ±900V			Internal Standard
	Electrostatic discharge	Voltage: 4kV (Contact discharge)			IC61131-2 IEC61000-4-2
	Radiated electromagnetic field noise	80 to 1000 MHz, 10 V/m			IC61131-2 IEC61000- 4-3
	Fast transient burst noise	Segment	Power supply module	Digital/analog input/output communication interface	IC61131-2 IEC61000- 4-4
		Voltage	2 kV	1 kV	
Environment	Free from corrosive gasses and excessive dust				-
Altitude	Up to 2,000 ms				-
Pollution degree	Less than equal to 2				-
Cooling	Air-Cooling				-

Communication specifications

Item	2MLL-DBDT	
Transmission Specification	Transmission speed	100/1000Mbps
	Transmission method	Base band
	Maximum distance between nodes	Electric: 100m@CAT5E or higher Optical: 2km@100Mbps.MM , 550m@1Gbps.MM ,5km~80km@ SM
	Send media	Electric: Category 5E or higher STP (Shielded Twisted pair) cable Optical: Multi mode (MMF)/Single mode (SMF) cable.
	Maximum protocol size	1500 bytes
	Communication network access method	CSMA/CD
	Frame error check method	CRC32
Max. Load	Ethernet: 10,000pps	
Topology	Star, Ring, and Linear (between adapters)	
Diagnosis function	IP collision detection function, self-diagnosis service, diagnosis using SoftMaster.	
IP setting method	Rotary switch, SoftMaster, BOOTP	
IP setting range	ML adapter only support StaticIP, 1. The default IP address is 172.168.0.XX, the XX is configured on 1x and 10x rotary switches on the adapter. 2. The range of the IP address is from 1 to 99. 3. The IP address cannot be in the same network subnet as ETH1 and ETH2. 4. If you want to change to the other subnet (for example:10.10.10. XX), should set 1x and 10x rotary switches to 0(zero) and use additional software: SoftMaster.	
External connecting terminal	USB mini B: PADT connection RJ45, SFP: PADT connection, data communication	
Status indication LED	PWR, RUN, SVR, I/F, RELAY. PADT, CHK, ERR, FAULT, LINK, ACT	
Parameter setting	SoftMaster (USB, Ethernet port)	
Device file	EDS file (Only EtherNet/IP)	
Maximum number of modules to be installed	12ea	
I/O Refresh size	Max input refresh size	768 Byte
	Max output refresh size	768Byte
Protocol Specifications (EtherNet/IP)	Data processing unit	Byte(8bit)
	Max read data size	Non periodic tag: 1,400 Byte Non periodic object: 1,024 Byte Cycle 1,024 Byte
	Max write data size	Non periodic tag: 1,400 Byte Non periodic object: 1,024 Byte Cycle 1,024 Byte

Item	2MLL-DBDT	
	Available communication type	Connection type (Cycle) messages: Class1 Non connection type (Non periodic) message: Tag, Object
	Maximum number of connections	Connection type (Cycle) :10 Non connection type (Non periodic) message (Tag, Object):10

2.8. Honeywell VFD integrated over EtherNet/IP

Honeywell VFD is a general purpose Drive solution and meets automation requirements in process and general application. It controls motors (Inductive, single-phase and three-phase) and bring better performance and effective management to the whole system. This document provides technical information for the Honeywell VFD.

Note: ControlEdge PLC supports native integration with Honeywell VFD model MVS100 only.

2.8.1. MVS100 Product Specification Details

<table>
<tr><th colspan="2">Items</th><th colspan="3">Description</th></tr>
<tr><td rowspan="6">Control</td><td>Control method</td><td colspan="3">V/F control, slip compensation, sensor less vector</td></tr>
<tr><td>Frequency settings power resolution</td><td colspan="3">Digital command: 0.01 Hz
Analog command: 0.06 Hz (60 Hz standard)</td></tr>
<tr><td>Frequency accuracy</td><td colspan="3">1% of maximum output frequency</td></tr>
<tr><td>V/F pattern</td><td colspan="3">Linear, square reduction, user V/F</td></tr>
<tr><td>Overload capacity</td><td colspan="3">Heavy load rated current: 150% 1 min, normal load rated current: 120% 1 min</td></tr>
<tr><td>Torque boost</td><td colspan="3">Manual torque boost, automatic torque boost</td></tr>
<tr><td rowspan="6">Operation</td><td>Operation function</td><td colspan="2">• PID control
• 3-wire operation
• Frequency limit
• Second function
• Anti-forward and reverse direction rotation
• Commercial transition
• Speed search
• Power braking
• Leakage reduction</td><td>• Up-down operation
• DC braking
• Frequency jump
• Slip compensation
• Automatic restart
• Automatic tuning
• Energy buffering
• Flux braking
• Fire Mode</td></tr>
<tr><td rowspan="5">Input</td><td rowspan="4">Multi-function terminal (7EA) P1-P7</td><td colspan="2">Select PNP (Source) or NPN (Sink) mode. Functions can be set according to In.65- In.71 codes and parameter settings. (Standard I/O is only provided for P5.)</td></tr>
<tr><td>• Forward direction operation
• Reset
• Emergency stop
• Multi step speed frequency high/ med/low
• DC braking during stop
• Frequency increase
• 3-wire
• Local/remote operation mode transition
• Select acc/dec/stop</td><td>• Reverse direction Operation
• External trip
• Jog operation
• Multi step acc/dec-high/med/low
• Second motor selection
• Frequency reduction
• Fix analog command frequency
• Transition from PID to general operation</td></tr>
<tr><td colspan="2">Pulse train</td><td>0-32 kHz, Low Level: 0-2.5V, High Level: 3.5-12V</td></tr>
</table>

	Output	Multi-function open Collector terminal	Fault output and inverter operation status output	Less than DC 24V, 50mA
		Multi-function relay terminal		Less than (N.O., N.C.) AC250V 1A, Less than DC 30V, 1A
		Analog output, Analog output 1	0-12Vdc (0-24mA): Select frequency, output current, output voltage, DC terminal voltage and others	
		Analog output 2	0-12Vdc: Select frequency, output current, output voltage, DC terminal voltage and others	
		Pulse train	Maximum 32 kHz, 10-12V	
Protection function	**Trip**	• Over current trip • External signal trip • ARM short circuit current trip • Overheat trip • Input imaging trip • Ground trip • Motor overheat trip • I/O board link trip • No motor trip • Parameter writing trip • Emergency stop trip • Command loss trip • External memory error • CPU watchdog trip • Motor normal load trip	• Over voltage trip • Temperature sensor trip • Inverter overheat Option trip • Output imaging trip • Inverter overload trip • Fan trip • Pre-PID operation • failure • External brake trip • Low voltage trip during operation • Low voltage trip • Safety A(B) trip • Analog input error • Motor overload trip	
	Alarm	Command loss trip alarm, overload alarm, normal load alarm, inverter overload alarm, fan operation alarm, resistance braking rate alarm, number of corrections on rotor tuning error.		
	Instantaneous blackout	Heavy load less than 15 ms (normal load less than 8 ms): continue operation (must be within the rated input voltage and rated output range) Heavy load more than 15 ms (normal load more than 8 ms): auto restart operation		
Structure/ working environment	**Cooling type**	Forced fan cooling structure (excluding some models)		
	Protection structure	• IP 20, UL Open Type (UL Enclosed Type 1 is satisfied by conduit installation option.) • IP66(NEMA 4X Indoor Only)		
	Input Mode	• 0.4-22kW: Keypad (LCD loader: Installation available but sold separately.) • 30-75kW: LCD loader		
	Ambient temperature	Heavy load: -10-50 C (14–122 F), normal load: -10-40 C (14–104 F) No ice or frost should be present. Working under normal load at 50℃ (122 F), it is recommended that less than 80% load is applied.		

	Ambient humidity	Relative humidity less than 90% RH (to avoid condensation forming)
	Storage temperature.	-20 C-65 C (-4–149 F)
	Surrounding environment	Prevent contact with corrosive gases, inflammable gases, oil stains, dust, and other pollutants (Pollution Degree 3 Environment).
	Operation altitude/Vibration	Maximum 1000m above sea level for standard operation. From 1000 to 4000m, the rated input voltage and rated output current of the drive must be derated by 1% for every 100m. / less than 1G (9.8m/sec^2)
	Pressure	70-106 kPa
Note: IP66 models do not support normal load operation.		

For more information, see *Honeywell VFD specification document* and *MVS100 User Manual.*
For more information on integration steps of ControlEdge PLC and MVS100*, See ControlEdge Builder User Guide.*

2.9. I/O Wiring

Remote Termination Panel provides an easy way to terminate field wiring away from I/O Module. Remote Terminal block plugs on to IO modules and are not required if RTP cables are used.

Type	**Removable terminal blocks (900TEK-0200, 900TER-0200, 900TCK-0200, 900TBR-0200, and900TBK-0200)**	**Remote Terminal Panel[1] (900RTS-0001 and 900RTA-L001)**
Terminal Block Styles	20 screw: Barrier or Euro-style, gold-plated 36 screw: Euro style, gold-plated	40 screw: Euro-style
Wire Size	20-screw: Euro-style - 0.1 mm^2 to 2.0 mm^2 (#14 to 26 AWG) solid or stranded Barrier style - 0.1 mm^2 to 2.0 mm^2 (#14 to 26 AWG) solid or stranded 36-screw: Euro-style – 0.1 mm^2 to 3.0 mm^2 (#12 to 26 AWG) solid or stranded 40-screw: Euro-style – 0.1 mm^2 to 3.0 mm^2 (#12 to 26 AWG) solid or stranded	
Shield terminals (900TSS-0001)	Optional brackets mounted top/bottom of rack. Each strip is 4 slots long with 4 screws.	
RTP Cable	N/A	Low Voltage RTP Cable (1.0M, 3.28ft.) Low Voltage RTP Cable (2.5M, 8.2ft.) Low Voltage RTP Cable (5.0M, 16.4ft.) High Voltage RTP Cable (1.0M, 3.28ft.) High Voltage RTP Cable (2.5M, 8.2ft.) High Voltage RTP Cable (5.0M, 16.4ft.) Low Power 16/32CH RTP Cable (1.0M, 3.28ft) Low Power 16/32CH RTP Cable (2.5M, 8.2ft) Low Power 16/32CH RTP Cable (5.0M, 16.4ft) AO - 8 Ch 1.0 M RTP Cable (1.0M, 3.28ft) AO - 8 Ch 1.0 M RTP Cable (2.5M, 8.2ft) AO - 8 Ch 1.0 M RTP Cable (5.0M, 16.4ft)
RTP Dimensions	N/A	4.38” L x 3.70” W x 2.60” H 111.1mm L x 94.0mm W x 66.0mm H
Terminal load rating[2]	4.2A	2.8A (Low Voltage RTP Cable) 4.2 A (High Voltage RTP Cable)
Note: 1. Standard 35mm wide DIN Rail. Provides connection of field wiring to I/O within an enclosure only. 2. External power supply provides power input for UIO, current load rating needs to be align with cable rating.		

Below table list the relationship between all I/O modules and their related terminal block or RTP.

I/O Module	Terminal Block (Euro)	Terminal Block (Barrier)	RTP	RTP required per module	RTP Cable
900U01-0100	900TEK-0200	900TBK-0200	900RTS-0001	1	900RTC-H2xx 900RTC-L2xx
900A01-0202	900TEK-0200	900TBK-0200	900RTA-L001	1	900RTC-L2xx
900A16-0103	900TCK-0200	N/A	900RTS-0001	2	900RTC-34xx
900B01-0301	900TEK-0200	900TBK-0200	900RTS-0001	1	900RTC-L2xx
900B08-0202	900TCK-0200	N/A	900RTS-0001	1	900RTC-BAxx
900G03-0202	900TER-0200	900TBR-0200	900RTS-0001	1	900RTC-H2xx
900G32-0301	900TCK-0200	N/A	900RTS-0001	2	900RTC-34xx
900G01-0202	900TEK-0200	900TBK-0200	900RTS-0001	1	900RTC-L2xx
900G04-0101	900TCK-0200	N/A	N/A	N/A	N/A
900H03-0202	900TER-0200	900TBR-0200	900RTS-0001	1	900RTC-H2xx
900H32-0302	900TCK-0200	N/A	900RTS-0001	2	900RTC-34xx
900H01-0202	900TER-0200	900TBR-0200	900RTR-H001	1	900RTC-H2xx
900K01-0201	900TEK-0200	900TBK-0200	N/A	N/A	N/A

2.10. Power Supply

2.10.1. 120/240VAC Power Supply (900P01-0501)

Item	Specification
Voltage	90 to 264 V AC, 47 to 63 Hz
Current	1.4 A Max continuous
Inrush Current	40 Amps peak-to-peak for 120 ms at 240 V AC
Input rating	130 VA
Output rating	58W
Fuse	Internal non-replaceable fuse.
Power Supply Hold up time	20milliseconds @ 115V AC, 60HZ maximum Load
Wiring	Screw type terminals, 0.3 mm^2 to 3.3 mm^2 (#12-22AWG)
Test jacks	5 V DC, 24 V DC
Ambient Temperature	T4, 0°C to 60°C

2.10.2. 24VDC Power supply (900P24-0501)

Item	Specification
Voltage	21 to 29V DC
Current	5A Max. continuous
Inrush Current	30A for 3ms @ 29V DC
Input rating	72.5W
Output rating	51W
Fuse	Internal non-replaceable fuse.
Power Supply Hold up time	20 milliseconds @ 24V DC, maximum Load
Wiring	Screw type terminals, 0.3 mm^2 to 3.3 mm^2 (#12-22AWG)
Ambient Temperature	T4, 0°C to 51°C

2.10.3. 120/240VAC Power Supply (900P01-0701)

Item	Specification
Voltage	90 to 264 V AC, 47 to 63 Hz
Current	1.4 A Max continuous
Inrush Current	40 Amps peak-to-peak for 120 ms at 240 V AC
Input rating	130 VA
Output rating	41W
Fuse	Internal non-replaceable fuse.
Power Supply Hold up time	20milliseconds @ 115V AC, 60HZ maximum Load
Wiring	Screw type terminals, 0.3 mm^2 to 3.3 mm^2 (#12-22AWG)
Test jacks	5 V DC, 24 V DC
Ambient Temperature	T4, -40°C to 70°C

2.10.4. 24VDC Power supply (900P24-0701)

Item	Specification
Voltage	21 to 29V DC
Current	3A Max.
Inrush Current	30A for 3ms @ 29V DC
Input rating	55W
Output rating	41W
Fuse	Internal non-replaceable fuse.
Power Supply Hold up time	20 milliseconds @ 24V DC, maximum Load
Wiring	Screw type terminals, 0.3 mm^2 to 3.3 mm^2 (#12-22AWG)
Ambient Temperature	T4, -40°C to +70°C

2.11. Power Status Module (900PSM-0200)

Item	Specification
Status indication	Green directional indicators using LEDs
Power supply Loading	5V;22mA Max

2.12. ControlEdge Builder Specification

ControlEdge Builder is ControlEdge PLC's configuration tool to design, configure, program, and maintain your PLC project

2.12.1. ControlEdge Builder Capabilities

Item	Specification
IEC 61131-3 Programming	Yes
Controller Simulator	Yes[1]
Programming Languages	Ladder Diagram (LD) Function Block Diagram (FBD) Structured Text (ST) Instruction List (IL) Sequential Function Chart (SFC)

Function Block Libraries[2]	Standard IEC61131-3 Honeywell Control MODBUS OPC UA EtherNet/IP HART Command User Defined Protocol
Communication Medium to PLC	Ethernet
Remote Download of Program	Yes
Online changes[3]	Yes
Remote Reboot	Cold or Warm Reboot
Remote Firmware Upgrade	Yes
Remote Diagnostics	Yes
Task status in Diagnostic Page	Yes
Note: 1. Controller Simulator runs on a virtual machine; Not supported on ELMM 2. See Online help in ControlEdge Builder 3. For example, if only one I/O module configuration is changed, other I/O modules will not be impacted when downloading the project. Refer online help in ControlEdge Builder for more information.	

2.12.2. ControlEdge Builder Hardware Requirements

Item	Specification
Minimum Processor	Pentium or compatible processor (2 GHz) Recommended: Intel® Core™ i5 equivalent or better
System RAM	Minimum: 1 GB Recommended: 4 GB
Operate System	Windows 7 32-bit or 64-bit with SP1, Windows 10 32-bit or 64-bit
Hard drive	5 GB available memory
DVD-ROM drive	Required
Graphic Card	DirectX 9 capable graphics adapter
Display color settings	True color (32 bit)
Display Resolution	Recommended resolution: 1280 x 800 or above Optimal resolutions: 1920 x 800, 1366 x 768, 1280 x 1024 and 1280 x 800

2.12.3. Project Limits in ControlEdge Builder

The following table lists the limits valid within one project. Please observe the corresponding notes below the table.

Item	Specification
Configurations in the project tree	1
Resources in the project tree	1
Program instances per resource	1000[1]
Tasks per resource	16[2]
Program instances per task	500[1]
Global variables	100000
Local variables per POU	15000
POUs in a project including POUs from libraries	2000
Total no. of functions and FBs of different types per POU	620[1]
Total no. of functions and FBs of same type per POU	1024[1]
Jumps and labels per POU	750[1]
Jumps and returns per POU	20[1]
SFC steps per POU	750
SFC transitions per POU	1024

SFC transition details in the project tree	256
SFC action details in the project tree	350
SFC actions per code worksheet	600
Contacts / coils per POU	3600
Global PG variables per program instance	2000[1, 2]

Note:
1. The actual value of this limit may be higher than the value mentioned here. However, the given value is the limit by manufacturer definition.
2. The actual value of this limit depends on the PLC type (in particular non-ProConOS targets).

2.12.4. Software Licenses

Model Number	Details
SP-EBLDR1	PLC and RTU builder client license. One required for each computer (physical or virtual) RTU Builder is to be installed on. Can run both online and offline.
SP- CSPLC1	PLC Execution Environment License. One required for each 900CP1-xxxx controller running PLC functionality. At least one license required for PLC Simulator
SP-EMD172	ControlEdge Builder R172, Media and documentation. Delivered as DVD with software and documentation.
SP-EMD172-ESD	ControlEdge Builder R172, Media and documentation. Software and documentation are delivered through software link for faster deliveries.
SP-MAPLC1	ControlEdge Transition Migration tool - Annual Subscription per user
SP-IMDIS1	Subsea MDIS Interface, Site License. One required for each site using MDIS feature.
SP-CELMM1	ELMM on ControlEdge PLC, unit license. One required for each ELMM.
SP-IPROF1	CONTROLEDGE PROFINET Usage License-1 INSTANC

2.13. Controller Simulator Specification

Item	Specification
Supported function	Connect, configure, and debug applications using ControlEdge Builder[1] I/O simulation[2] System diagnostics Upload system event logs Project archive and upload configuration Communication with SCADA, PLC simulator instances or physical ControlEdge PLC and RTU controllers Protocols - Modbus TCP master - Modbus TCP slave - OPC UA server - OPC UA client - DNP3 Master and Outstation
Deployment	Local VM software VEP
Supported VM software[3]	VMware Workstation Player 12.5.8 or higher VMware vCenter Server 6.0.0 or higher
Delivery method[3]	OVA file.

Note:
1. Users can switch configuration on simulator and physical controller without any modification. But some functions are not supported in simulator.
2. No physical IOMs supported on simulator. Any configuration of IOMs will be simulated.
3. VM software is a third-party application, and it should be purchased separately.

3. Hardware Power Consumption, Heat Dissipation and Weight

3.1. ControlEdge900 I/O Modules

3.1.1. Power Consumption and Heat Dissipation

Item	Module number	Max. Current @5V	Max. Current @24V	Heat Dissipation (W)
Control Processor Module	900CP1-0200	750 mA	0 mA	3.75W
Expansion Processor Module	900SP1-0200	520 mA	0 mA	2.6W
Control Processor Module, Ext. Temp (-40 to 70°C)	900CP1-0300	750 mA	0 mA	3.75W
Expansion Processor Module, Ext. Temp (-40 to 70°C)	900SP1-0300	520 mA	0 mA	2.6W
Serial communications module, 2 x RS232, 2 x RS485, Ext. Temp (-40 to 70°C)	900ES1-0100	400 mA	0 mA	2 W
UIO Module, Ext. Temp (-40 to 70°C)	900U01-0100	380 mA	0 mA	1.9W
Universal AI -RTD, TC, V, 8 Ch	900A01-0202	40 mA	25 mA	0.8W
Analog Input High level,16 Ch	900A16-0103	75 mA	50 mA	2.2W
Analog Output, 0 to 20mA ,4 Ch	900B01-0301	40 mA	200 mA	6.8W
Analog Outputs 0 to 20mA,8 Ch	900B08-0202	225 mA	350 mA	9.4W
Digital Input 120/240 VAC, 16 Ch	900G03-0202	130 mA	0 mA	0.65W
Digital Input 24VDC, 32Ch, Ext. Temp (-40 to 70°C)	900G32-0301	215 mA	0 mA	1.1W
Digital Input, Contact Type, 16 Ch	900G01-0202	130 mA	40 mA	1.76W
Digital Input, 120/240 VAC-125VDC, 16 Ch	900G04-0101	130mA	130 mA	8.3W
Digital Output - 120/240 VAC, 8 Ch	900H03-0202	218 mA	0 mA	1.09W
Digital Output - 24VDC, 32 Ch, Ext. Temp (-40 to 70°C)	900H32-0302	235 mA	0 mA	1.175W
Digital Output, Relay, 8 Ch	900H01-0202	110 mA	100 mA	3W
Pulse/Freq, 4 Ch	900K01-0201	110 mA	250 mA	6.6W
120/240 V AC, 58W Power Supply	900P01-0501	N/A	N/A	25W
120/240 V AC, 41W Power Supply Ext. Temp (-40 to 70°C)	900P01-0701	N/A	N/A	25W
24V DC, 58W Power Supply at 51°C	900P24-0501	N/A	N/A	58W
24V DC, 41W Power Supply (-40 to +70°C)	900P24-0701	N/A	N/A	41W
Redundant Power Status Module, Ext. Temp (-40 to 70°C)	900PSM-0200	22 mA	0 mA	0.11W
MOXA EDS-308 Ethernet Switch (8 Copper ports)	50008930-001	0 mA	350 mA	8.4W
MOXA EDS-316-MM-SC Ethernet Switch (14 Copper + 2 Multi-Mode ports)	50008930-002	0 mA	380 mA	9.12W
MOXA EDS-316-SS-SC Ethernet Switch (14 Copper + 2 Single-Mode ports)	50008930-003	0 mA	380 mA	9.12W
MOXA EDS-308-SS-SC Ethernet Switch (6 Copper + 2 Single-Mode ports)	50008930-004	0 mA	350 mA	8.4W
MOXA Fiber Optic Convertor IMC-101-M-SC, Multi-mode	50135395-001	0 mA	160 mA	3.84W
MOXA Fiber Optic Convertor IMC-101-S-SC), Single mode	50135395-002	0 mA	160 mA	3.84W

3.1.2. Dimensions and Weight

Item	Module Number	Dimension	Weight
1 I/O Slot Rack[1,2,3]	900R01-0300	137mm H x 150 mm W x 151.7mm D 5.4” H x 5.9” W x 6.0” D	900g
4 I/O slot Rack[1,2,3]	900R04-0300	137mm H x 266.7mm W x 151.7mm D 5.4” Hx 10.5” W x 6.0” D	2104g
8 I/O slot Rack[1,2,3,]	900R08-0300	137mm H x 419.1mm W x 151.7mm D 5.4” H x 16.5” W x 6.0” D	3126g
8 I/O slot Rack with redundant power support[1,2,3]	900R08R-0300	137mm Hx 530.9mm W x 151.7mm D 5.4” H x 20.9” W x 6.0” D	4422g
12 I/O slot Rack[1,2,3,]	900R12-0300	137mm H x 571.5mm W x 151.7mm D 5.4” H x 22.5” W x 6.0” D	4072g
12 I/O slot Rack with redundant power support[1,2,3]	900R12R-0300	137mm H x 683.3mm W x 151.7mm D 5.4” H x 26.9” W x 6.0” D	5252g
Redundant CPM Rack[1,2,3]	900RR0-0300	137mm H x 261.6mm W x 151.7mm D 5.4” H x 10.3” W x 6.0” D	1751g
CPM, ControlEdge 900	900CP1-0300	137mm H x 38.1mm W 5.4" H x 1.5" W	320g
EPM, ControlEdge 900	900SP1-0300	137mm H x 38.1mm W 5.4" H x 1.5" W	320g
4 port serial communications module, 2 x RS232, 2 x RS485	900ES1-0100	137mm H x 35.6mm W 5.4" H x 1.4" W	350g
Universal IO Module	900U01-0100	137mm H x 38.1mm W 5.4” H x 1.5” W	190g
Universal AI -RTD, TC, V, 8 Ch	900A01-0202	137mm H x 35.6mm W 5.4” H x 1.4” W	210g
Analog Input hi level, 16 Ch	900A16-0103	137mm H x 35.6mm W 5.4” H x 1.4” W	397g
Analog Output, 0 to 20mA, 4 Ch	900B01-0301	137mm H x 35.6mm W 5.4” H x 1.4” W	408g
Analog Outputs 0 to 20mA, 8 Ch	900B08-0202	137mm H x 35.6mm W 5.4” H x 1.4” W	400g
Digital Input 120/240 VAC, 16 Ch	900G03-0202	137mm H x 35.6mm W 5.4” H x 1.4” W	210g
Digital Input 24VDC, 32 Ch	900G32-0301	137mm H x 35.6mm W 5.4” H x 1.4” W	175g
Digital Input, Contact type, 16 Ch	900G01-0202	137mm H x 35.6mm W 5.4” H x 1.4” W	354g
Digital Input, 120/240 VAC-125VDC, 16 Ch	900G04-0101	137mm H x 35.6mm W 5.4” H x 1.4” W	400g
Digital Output - 120/240 VAC, 8 Ch	900H03-0202	137mm H x 35.6mm W 5.4” H x 1.4” W	230g
Digital Output – 24VDC, 32 Ch	900H32-0302	137mm H x 35.6mm W 5.4” H x 1.4” W	180g
Digital Output, Relays, 8 Ch	900H01-0202	137mm H x 35.6mm W 5.4” H x 1.4” W	425g
Pulse/Freq, (4chan)	900K01-0201	137mm H x 35.6mm W 5.4” H x 1.4" W	360g
Power Supply 120/240VAC, 58W	900P01-0501	137mm H x 72.6mm W 5.4” H x 2.86” W	820g

Item	Module Number	Dimension	Weight
Power Supply 120/240VAC, 41W, Ext. Temp (-40 to 70°C)	900P01-0701	137mm H x 72.6mm W 5.4” H x 2.86” W	820g
Power Supply 24VDC, 58W at 51°C	900P24-0501	137mm H x 72.6mm W 5.4” H x 2.86” W	792g
Power Supply 24VDC, 41W, Ext. Temp (-40 to +70°C)	900P24-0701	137mm H x 72.6mm W 5.4” H x 2.86” W	792g
Power Status Module, Redundant, Ext. Temp (-40 to 70°C)	900PSM-0200	137mm H x 35.6mm W 5.4” H x 1.4” W	448g
MOXA EDS-308 Ethernet Switch (8 Copper ports)	50008930-001	135mm H x 53.6mm W x 105mm D 5.31” H x 2.11” W x 4.13” D	790g
MOXA EDS-316-MM-SC Ethernet Switch (14 Copper + 2 Multi-Mode ports)	50008930-002	135mm H x 80.1mm W x 105mm D 5.31” H x 3.15” W x 4.13” D	1140g
MOXA EDS-316-SS-SC Ethernet Switch (14 Copper + 2 Single-Mode ports)	50008930-003	135mm H x 80.1mm W x 105mm D 5.31” H x 3.15” W x 4.13” D	1140g
MOXA EDS-308-SS-SC Ethernet Switch (6 Copper + 2 Single-Mode ports)	50008930-004	135mm H x 53.6mm W x 105mm D 5.31” H x 2.11” W x 4.13” D	790g
MOXA: IMC-101-M-SC Fiber Optic convertor, Multi-mode	50135395-001	135mm H x 53.6mm W x 105mm D 5.31” H x 2.11” W x 4.13” D	630g
MOXA: IMC-101-S-SC Fiber Optic convertor, Single mode	50135395-002	135mm H x 53.6mm W x 105mm D 5.31” H x 2.11” W x 4.13” D	630g

Note:
1. All racks depth (D) dimension is included I/O terminal blocks.
2. Surface mounting with 4 screws in back of rack. Installation Category II, Pollution Degree 2, IEC 60664, UL840 Installation coordination.
3. Rear mounting plate extends height to 6.9” (175.3mm).

3.2. MasterLogic I/O Modules

3.2.1. Power Consumption and Heat Dissipation

Item	Module number	Max. Current @5V	Max. Current @24V	Heat Dissipation (W)
Racks/Bases (Only for ML200)				
Main Base 4 slot	2MLB-M04A			
Main Base 6 slot	2MLB-M06A			
Main Base 8 slot	2MLB-M08A			
Main Base 12 slot	2MLB-M12A			
Expansion Base 8 slot	2MLR-E08P			
Expansion Base 12 slot	2MLR-E12P			
Adaptors	900ES1-0100	400 mA		2 W
EtherNet/IP adaptor (ML200)	2MLL-DBDT	560 mA		2.8W
EtherNet/IP adaptor (ML50)	MEL-BSSRT	580 mA		2.9W
I/O Adaptors				
DC24V Input (32 ch)	MLE-DC32A	50mA		0.25W
Open Collector Output (32 ch)	MLE-TN32A	120mA	20mA	1.08W
DC24V Input (8 ch) & Relay Output (8 ch)	MLE-DR16A	280mA		1.4W
Open Collector Output (32ch)-Source	MLE-TP32A	120mA	20mA	1.08W
Relay Output (16 ch)	MLE-RY16A	420mA		2.1W
Current/Voltage Input (8 ch)	MLF-AD08A	105mA	85mA	2.57W
Current/Voltage Input (4 ch), Hi-resolution	MLF-AD04C	110mA	100mA	2.95W
Current Output (4 ch), Hi-resolution	MLF-DC04C	75mA	170mA	4.46W
Current/Voltage Input (2 ch), Current/Voltage Output (2 ch)	MLF-AH04A	110mA	130mA	3.67W
Current Output (4 ch)	MLF-DC04A	110mA	120mA	3.43W
Digital Input - DC 24V Input (Sink/Source Type), 16 ch	2MLI-D22A	30mA		0.15W
Digital Input - DC 24V Input (Sink/Source Type), 64 ch	2MLI-D28A	60mA		0.3W
Digital Output - TR Output, 0.5A (SinkType), 16 ch	2MLQ-TR2A	70mA	10mA	0.59W
Digital Output - TR Output, 0.1A (SinkType), 64 ch	2MLQ-TR8A	230mA	10mA	1.39W
Analog Input - Voltage/Current Input Module, 16ch	2MLF-AD16A	330mA		1.65W
DUMMY Module for empty I/O slots	2MLT-DMMA	0 mA	mA	W

For more information see *MasterLogic 50 Specification* Document (10-23-10-08) and *MasterLogic 200 Input/Output Specification and Technical* Data Document

3.2.2. Dimensions and Weight

Item	Model Number	Dimension (mm)	Weight (g)
Racks/Bases (Only for ML200)			
Main Base 4 slot	2MLB-M04A	210W x 98H x 19D	280
Main Base 6 slot	2MLB-M06A	244W x 98H x 19D	340
Main Base 8 slot	2MLB-M08A	318W x 98H x 19D	420
Main Base 12 slot	2MLB-M12A	426W x 98H x 19D	540
Expansion Base 8 slot	2MLR-E08P	426W x 98H x 19D	540
Expansion Base 12 slot	2MLR-E12P	481W x 98H x 19D	700
Adaptors			
EtherNet/IP adaptor (ML200)	2MLL-DBDT	98H x 90D x 27W	145
EtherNet/IP adaptor (ML50)	MEL-BSSRT	90H x 72.8D x 43.5W	380
I/O Modules			
DC24V Input (32 ch)	MLE-DC32A	20W x 90H x 60D	60
Open Collector Output (32 ch)	MLE-TN32A	20W x 90H x 60D	104
DC24V Input (8 ch) & Relay Output (8 ch)	MLE-DR16A	27W x 90H x 60D	81
Open Collector Output (32ch)-Source	MLE-TP32A	20W x 90H x 60D	100
Relay Output (16 ch)	MLE-RY16A	27W x 90H x 60D	160
Current/Voltage Input (8 ch)	MLF-AD08A	20W x 90H x 60D	70
Current/Voltage Input (4 ch), Hi-resolution	MLF-AD04C	20W x 90H x 60D	120
Current Output (4 ch), Hi-resolution	MLF-DC04C	20W x 90H x 60D	118
Current/Voltage Input (2 ch), Current/Voltage Output (2 ch)	MLF-AH04A	20W x 90H x 60D	120
Current Output (4 ch)	MLF-DC04A	20W x 90H x 60D	124
Digital Input - DC 24V Input (Sink/Source Type), 16 ch	2MLI-D22A	27W x 98H x 90D	120
Digital Input - DC 24V Input (Sink/Source Type), 64 ch	2MLI-D28A	27W x 98H x 90D	150
Digital Output - TR Output, 0.5A (SinkType), 16 ch	2MLQ-TR2A	27W x 98H x 90D	110
Digital Output - TR Output, 0.1A (SinkType), 64 ch	2MLQ-TR8A	27W x 98H x 90D	150
Analog Input - Voltage/Current Input Module, 16ch	2MLF-AD16A	27W x 98H x 90D	115
DUMMY Module for empty I/O slots	2MLT-DMMA	27W x 98H x 90D	25
Power Supply			
Free Voltage(110V,220V) / DC5V, 3A, DC24V,0.6A	2MLP-ACF1	55W x 98H x 90D	400
Free Voltage(110V,220V) / DC5V, 6A	2MLP-ACF2	55W x 98H x 90D	400
AC220V / DC5V, 8.5A	2MLP-AC23	55W x 98H x 110D	600
DC24V / DC5V,6A	2MLP-DC42	55W x 98H x 110D	600
Smart Link Assemblies			
Smart Link Terminal Board 40P	TG7-1H40S	149W x 40H x D	186
Relay Board, 40point (For DO Sink Type only)	R32C-NS5A-40P	178.5W x 70H x D	375
TB Cable			
Cable Assembly for Terminal Board, 40p-40p, 1.5m	C40HF-15PB-1	L=1.5m	230
Cable Assembly for Terminal Board, 40p-40p, 3.0m	C40HF-30PB-1	L=3.0m	380
Smart Link Cable Ass'y 40-40P, 1.5 Meter	C40HH-15S-XBI	L=1.5m	210
Smart Link Cable Ass'y 40-40P, 3.0 Meter	C40HH-30S-XBI	L=3.0m	350

4. Hardware Spacing Requirement

4.1. ControlEdge 900 I/O Modules

Item	Specification
Vertical Spacing (between rack to rack, rack to cell/floor)	165mm 6.5”
Horizontal Spacing	0mm 0”

4.2. ML50/200 I/O Modules

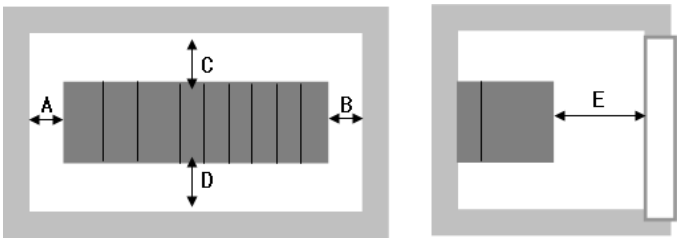

1. A, B: More than 5cm.
2. C, D: More than 5cm for easy installation of module.
   More than 15cm is recommended if fiber optic modules or full loaded power supply is used.
3. E: More than 8cm, if fiber optic cable or connector-type I/O modules are used or more than 10cm, if the FTP cable is used.
4. Install PLC in the direction as shown in the following figure. This helps in protecting the PLC from radiation.

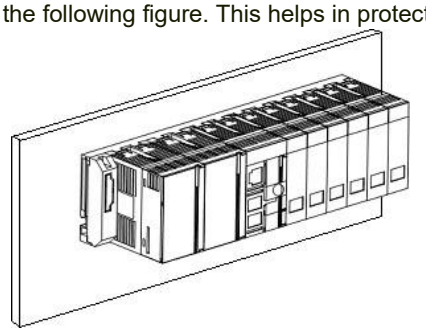

5. Do not install the PLC in the direction displayed in the following figure.

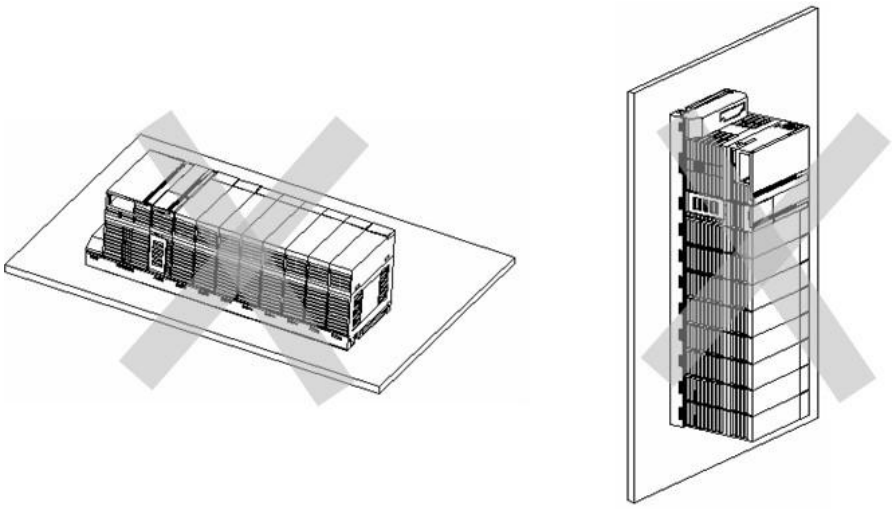

5. Environment Conditions (ControlEdge 900 I/O modules)

Item	Rated	Transportation & Storage
Ambient Temperature	For regular temperature hardware	
	32 to 140°F 0 to 60°C	-40 to 158°F -40 to 70°C
	For extended temperature hardware	
	-40 to 158°F -40 to 70°C	-40 to 185 °F -40 to 85°C
Ambient Relative Humidity	10% to 90 % RH non-condensing	5 % to 95 % RH non-condensing
Mechanical shock Acceleration Duration	Half-sine, 15g peak 11 ms durations, 6 directions	Not rated
Vibration	IEC 60068-2-6 Sinusoidal (5 to 8.4 Hz) 3.5mm / (8.4 to 150 Hz) 1.0 g;1 octave/min, 10 cycles per axis, 3 axes.	See “The Test condition of random vibration” table
Harsh Environment*	Hardware including CPM, EPM, Power Supplies, IO Modules, Redundant RTP, Communication Modules, PSM and backplanes have conformal coating that is suitable for operation in **G3** level of harsh environment.	
Maximum Altitude	2000 Meters	
RoHS*	Hardware including CPM, EPM, Power Supplies, IO Modules, Redundant RTP, Communication Modules, PSM and backplanes compliant to RoHS directive	

The Test condition of random vibration

Frequency (Hz)	PSD (g^2/Hz)	RMS (g)	Duration	Direction
10	0.0065	0.74	60min/direction	X, Y
20	0.0065			
120	0.0002			
121	0.003			
200	0.003			
240	0.0015			
340	0.00003			
500	0.00015			
5	0.01	1.07		Z
100	0.01			
300	0.00001			

List of Extended Temperature Module numbers

Description	Model Number	Values
Racks		
Redundant CPM Rack (Assembly)	900RR0-0300	Extended Operating Temperature (-40°C to 70°C)
1 I/O Slot Rack – Non-Redundant Power (Assembly)	900R01-0300	
4 I/O Slot Rack – Non-Redundant Power (Assembly)	900R04-0300	
8 I/O Slot Rack – Non-Redundant Power (Assembly)	900R08-0300	
12 I/O Slot Rack – Non-Redundant Power (Assembly)	900R12-0300	
8 I/O Slot Rack – Redundant Power (Assembly)	900R08R-0300	
12 I/O Slot Rack – Redundant Power (Assembly)	900R12R-0300	
Control Processor Module		
Control Processor Module	900CP1-0300	Extended Operating Temperature (-40°C to 70°C)
Expansion Processor Module		
Expansion Processor Module	900SP1-0300	Extended Operating Temperature (-40°C to 70°C)
4 port serial communications module, 2 x RS232, 2 x RS485	900ES1-0100	
IO Module		
Universal IO Module	900U01-0100	Extended Operating Temperature (-40°C to 70°C)
Digital Input 24VDC, 32Ch	900G32-0301	
Digital Output,24VDC, 32 Ch	900H32-0302	
Power Supply		
Redundant Power Status Module	900PSM-0200	Extended Operating Temperature (-40°C to 70°C)
Power supply AC-DC-NON SIL 41W	900P01-0701	
Power Supply DC-DC NON SIL 41W	900P24-0701	

6. Standards and Approvals (ControlEdge 900 I/O Modules)

Item	Specification	
CE Conformity	This product is in conformity with the protection requirements of the following European Council Directives: 2014/35/EU, the Low Voltage Directive, and 2014/30/EU, the EMC Directive. Conformity of this product with any other “CE Mark” Directive(s) shall not be assumed .	
	LVD Directive:	
	Title	Number
	Safety requirements for electrical equipment for measurement, control, and laboratory use –Part 1: General requirements	EN 61010-1
	EMC directive:	
	Title	Number
	Programmable controllers- Part 2: Equipment requirements and Tests	IEC 61131-2
	Electrical equipment for measurement, control and laboratory use – EMC requirements – Part 1: General requirements	EN 61326-1
	Industrial, scientific and medical (ISM) radio-frequency equipment – Electromagnetic disturbance characteristics – Limits and methods of measurement	CISPR 11
	Electromagnetic compatibility (EMC) – Part 3-2: Limits –Limits for harmonic current emissions (equipment input current ≤ 16A per phase)	IEC 61000-3-2
	Electromagnetic compatibility (EMC) – Part 3-3: Limits –Limitation of voltage changes, voltage fluctuations and flicker in public low-voltage supply systems, for equipment with rated current ≤ 16 A per phase and not subject to conditional connection	IEC 61000-3-3
	Electromagnetic compatibility (EMC) – Part 4-2: Testing and measurement techniques – Electrostatic discharge immunity test	IEC 61000-4-2
	Electromagnetic compatibility (EMC) – Part 4-3: Testing and measurement techniques – Radiated, radio-frequency, electromagnetic field immunity test	IEC 61000-4-3
	Electromagnetic compatibility (EMC) – Part 4-4: Testing and measurement techniques – Electrical fast transient/burst immunity test	IEC 61000-4-4
	Electromagnetic compatibility (EMC) – Part 4-5: Testing and measurement techniques – Surge immunity test	IEC 61000-4-5
	Electromagnetic compatibility (EMC) – Part 4-6: Testing and measurement techniques – Immunity to conducted disturbances, induced by radio-frequency fields	IEC61000-4-6
	Electromagnetic compatibility (EMC) – Part 4-8: Testing and measurement techniques – Power frequency magnetic field immunity test	IEC61000-4-8
	Electromagnetic compatibility (EMC) – Part 4-11: Testing and measurement techniques – Voltage dips, short interruptions and voltage variations immunity tests	IEC61000-4-11
	Electromagnetic compatibility (EMC) – Part 4-18: Testing and measurement techniques – Damped Oscillatory wave immunity test	IEC61000-4-18 (equivalent ANSI/IEEE C37.90.1)

Item	Specification	
c UL us (General purpose safety)	Compliant with EN61010-1, ANSI/UL 61010-1 and CAN/CSA-C22.2 No. 61010-1-12	
RCM	Electromagnetic compatibility (EMC) – Part 6.3: Generic standards – Emission standard for residential, commercial and light-industrial environments	AS/NZS 61000.6.3
	Electromagnetic compatibility (EMC) – Part 6.4: Generic standards – Emission standard for industrial environments	AS/NZS 61000.6.4
CSA[1]	Non-incentive Electrical Equipment for use in Hazardous Locations	CAN/CSA C22.2 No. 213
	Electrical and Electronic Test, Measuring and Process Control Equipment	CAN/CSA-C22.2 No. 61010-1-12
	General requirements — Canadian Electrical Code, Part II	CAN/CSA-C22.2 No. 0-10
	Safety Requirements for Electrical Equipment for Measurement, Control, and Laboratory Use — Part 1: General Requirements	UL 61010-1
	Non-incentive Electrical Equipment for Use in Class I and II, Division 2 and Class III, Division 1 and 2 Hazardous (classified) Locations	UL 12.12.01
ATEX	Electrical apparatus for explosive gas atmospheres. Part 0: General Requirements	EN IEC60079-0
	Electrical apparatus for explosive gas atmospheres Construction, test and marking of type of protection “e” electrical apparatus	EN 60079-7
	Electrical apparatus for explosive gas atmospheres Construction, test and marking of type of protection “n” electrical apparatus	EN IEC60079-15
ISA Secure Level 2 [2]	ISASecure™ Embedded Device Security Assurance Program Version 2.0.0 Level 2	ISA 99
EAC	Technical Regulations of the Eurasian Customs Union conformity	
ABS	ABS RULES FOR BUILDING AND CLASSING STEEL VESSELS	19-HS1910403-PDA
BV	Bureau Veritas Rules for Classification of Steel Ships	NR467 C1 R11 58869/A0 BV
LR	Lloyd’s Register Type Approval System Test Specification Number 1	LR2003627TA
DNV	DNV GL rules for classification – Ships, offshore units, and high speed and light craft	TAA00002TA, Rev3
KR	Korean Register Type Approval Certificate.	SHI41089-AC001
IACS	E10 Test Specification for Type Approval IACS UR-E10 rev7	

Item	Specification	
RoHS	Directive 2011/65/EU	
RoHS China	The Administrative Measures for the Restriction of the Use of Hazardous Substances in Electrical and Electronic Products	
ODVA	ODVA composite Conformance Test (CT)	CT 14

Note:
1. For All standard's issue date and revision refer corresponding Certificates.
2. All certifications are not applicable for MOXA devices.
3. ISA99 Security L2 is applicable for ControlEdge PLC R160

Approval Rating for standard Temperature (0 to 60° C)

Hazardous Location Approvals	Approval Rating
CSA	Class I, Division 2, Groups A, B, C & D T*
ATEX	II 3 G Ex ec nC IIC T* Gc (for 900H01) II 3 G Ex ec IIC T* Gc (for other modules)
Temperature class (T*)	**Module Number**
T3	900G03, 900G04
T4	900H03, 900P01, 900P24, 900SP1-0200, 900CP1-0200, 900B01, 900B08.
T5	900H32-01XX, 900G32-01XX, 900G01, 900H01, 900A16, 900K01
T6	900A01

Note:
Classification of maximum surface temperatures for Group II electrical equipment are:

Temperature class	Maximum surface temperature ℃
T1	450
T2	300
T3	200
T4	135
T5	100
T6	85

Approval Rating for Extended Temperature (-40 to 70° C)

Hazardous Location Approvals	Approval Rating
CSA	Class I, Division 2, Groups A, B, C & D T*
IECEx	IECEx Ex ec nC IIC T* Gc (for 900H01) Ex ec IIC T* Gc (for other modules)
Temperature class (T*)	**Module Number**
T4	900U01-0100, 900G32-0301, 900H32-0302, 900ES1-0100, 900SP1-0300, 900CP1-0300, 900CP2-0100, 900PSM-0200, 900P01-0701, 900P24-0701[1]

[1] The model is applicable for only IECEx.

Note:
Classification of maximum surface temperatures for Group II electrical equipment are:

Temperature class	Maximum surface temperature ℃
T1	450
T2	300
T3	200
T4	135
T5	100
T6	85

Note: Racks do not have any Temperature code, System/Racks will consider T code based on the modules used.

7. Module Number List

7.1. ControlEdge 900 I/O Modules

Item	Model	Description
		Racks
1	900RR0-0300	Redundant CPM Rack (Assembly), Ext. Temp (-40 to 70°C)
2	900R01-0300	1 I/O Slot Rack – Non-Redundant Power (Assembly), Ext. Temp (-40 to 70°C)
3	900R04-0300	4 I/O Slot Rack – Non-Redundant Power (Assembly), Ext. Temp (-40 to 70°C)
4	900R08-0300	8 I/O Slot Rack – Non-Redundant Power (Assembly), Ext. Temp (-40 to 70°C)
5	900R12-0300	12 I/O Slot Rack – Non-Redundant Power (Assembly), Ext. Temp (-40 to 70°C)
6	900R08R-0300	8 I/O Slot Rack – Redundant Power (Assembly), Ext. Temp (-40 to 70°C)
7	900R12R-0300	12 I/O Slot Rack – Redundant Power (Assembly), Ext. Temp (-40 to 70°C)
		Control Processor Module
8	900CP1-0200	Control Processor Module v1
9	900CP1-0300	Control Processor Module, Ext. Temp (-40 to 70°C)
10	900CP2-0100	Control Processor Module v2, Ext. Temp (-40 to 70°C)
		Expansion Processor Module
11	900SP1-0200	Expansion Processor Module
12	900SP1-0300	Expansion Processor Module, Ext. Temp (-40 to 70°C)
13	900ES1-0100	4 port serial communications module, 2 x RS232, 2 x RS485, Ext. Temp (-40 to 70°C)
		IO Module
14	900U01-0100	Universal IO Module, Ext. Temp (-40 to 70°C)
15	900A01-0202	Universal AI, RTD, TC, V, 8 Ch
16	900A16-0103	Analog Input high level (16 channel)
17	900B01-0301	Analog Output, 0 to 20mA, (4 channel)
18	900B08-0202	Analog Outputs 0 to 20mA (8 channel, 5 modules/rack)
19	900G03-0202	Digital Input 120/240 VAC, 16 Ch
20	900G32-0301	Digital Input 24VDC, 32Ch, Ext. Temp (-40 to 70°C)
21	900G01-0202	Digital Input, Contact type, (16 channel)
22	900G04-0101	Digital Input, 120/240 VAC-125VDC, (16 channel Isolated)
23	900H03-0202	Digital Output, 120/240 VAC, 8 Ch
24	900H32-0302	Digital Output,24VDC, 32 Ch, Ext. Temp (-40 to 70°C)
25	900H01-0202	Digital Output, Relays (8 channel)
26	900K01-0201	Pulse/Freq (4 channel)
		Power Supply
27	900P01-0501	120/240 V AC, 58 W Power Supply
28	900P24-0501	24 V DC, 58W Power Supply at 51°C
29	900P24-0701	DC-DC NON SIL 41W Power supply, Ext. Temp (-40 to 70°C)
30	900P01-0701	AC-DC-NON SIL 41W Power supply, Ext. Temp (-40 to 70°C)
31	900PSM-0200	Redundant Power Status Module, Ext. Temp (-40 to 70°C)
		Terminal Blocks
32	900TEK-0200	TB Housing, Black 20 Position Euro style
33	900TER-0200	TB Housing, Red 20 Position Euro style
34	900TCK-0200	TB Housing, Black 36 Position Euro style
35	900TBR-0200	High Voltage Terminal Block (Barrier Style)

36	900TBK-0200	Low Voltage Terminal Block (Barrier Style)
RTP and RTP Cable		
37	900RTS-0001	DI, DO, AO Remote Terminal Panel (RTP)
38	900RTA-L001	Analog Input Remote Terminal Panel
39	900RTR-H001	Relay Output Remote Terminal Panel (RTP)
40	900RTC-L210	Low Voltage RTP Cable (1.0M, 3.28ft.)
41	900RTC-L225	Low Voltage RTP Cable (2.5M, 8.2ft.)
42	900RTC-L250	Low Voltage RTP Cable (5.0M, 16.4ft.)
43	900RTC-H210	High Voltage RTP Cable (1.0M, 3.28ft.)
44	900RTC-H225	High Voltage RTP Cable (2.5M, 8.2ft.)
45	900RTC-H250	High Voltage RTP Cable (5.0M, 16.4ft.)
46	900RTC-3410	RTP Cable, Low Power 16/32CH 1.0M 3.28ft
47	900RTC-3425	RTP Cable, Low Power 16/32CH 2.5M 8.2ft
48	900RTC-3450	RTP Cable, Low Power 16/32CH 5.0M 16.4ft
49	900RTC-BA10	AO - 8 Ch 1.0 M RTP Cable
50	900RTC-BA25	AO - 8 Ch 2.5M RTP Cable
51	900RTC-BA50	AO - 8 Ch 5.0 M RTP Cable
Auxiliary Hardware		
52	51307946-001	Security cover, CPM/EPM
53	51452262-503	IO Module Insert Label Kit
54	900TNF-0200	Filler Block Terminal Cover
55	900RNF-0200	Redundant CPM Rack Filler plate (no RSM)
56	900TSS-0001	Shield Terminal Strip (package of 2)
57	900J02-0001	Terminal board jumpers (10, two pos. jumpers)
58	900J10-0001	Terminal board jumpers (10, ten pos. jumpers)
59	51205995-501	MI/MP 250 Ohm Resistor Kit of 8
Networking Components		
60	50008930-001	MOXA EDS-308, Network Switch, 8 Copper ports
61	50008930-002	MOXA EDS-316-MM-SC, Network Switch, 14 Copper + 2 multi-Mode ports
62	50008930-003	MOXA EDS-316-SS-SC, Network Switch, 14 Copper + 2 Single-Mode ports
63	50008930-004	MOXA EDS-308-SS-SC, Network Switch, 6 Copper + 2 Single-Mode ports
64	50135395-001	MOXA IMC-101-M-SC, Ethernet Fiber Optic Converter, Multi-Mode
65	50135395-002	MOXA IMC-101-S-SC, Ethernet Fiber Optic convertor, Single mode
Software and Media Kit		
66	SP-CSPLC1	Execution Environment, ControlEdge PLC
67	SP- EMD172-ESD	ControlEdge Builder R172 Media Kit, Electronic Software Distribution
68	SP-EMD172	ControlEdge Builder R172 Media Kit
69	SP-EBLDR1	ControlEdge Builder Client License
70	SP-IMDIS1	Subsea MDIS Interface, Site License. One required for each site using MDIS feature.
71	SP-CELMM1	ELMM on ControlEdge PLC, unit license. One required for each ELMM.
72	SP-IPROF01	ControlEdge PLC PROFINET Use License

7.2. ML50/200 I/O Modules

Item	Model	Description
Racks/Bases (Only for ML200)		
1	2MLB-M04A	Main Base 4 slot
2	2MLB-M06A	Main Base 6 slot
3	2MLB-M08A	Main Base 8 slot
4	2MLB-M12A	Main Base 12 slot
5	2MLR-E08P	Expansion Base 8 slot
6	2MLR-E12P	Expansion Base 12 slot
Adaptors		
7	2MLL-DBDT	EtherNet/IP adaptor (ML200)
8	MEL-BSSRT	EtherNet/IP adaptor (ML50)
I/O Modules		
9	MLE-DC32A	DC24V Input (32 ch)
10	MLE-TN32A	Open Collector Output (32 ch)
11	MLE-DR16A	DC24V Input (8 ch) & Relay Output (8 ch)
12	MLE-TP32A	Open Collector Output (32ch)-Source
13	MLE-RY16A	Relay Output (16 ch)
14	MLF-AD08A	Current/Voltage Input (8 ch)
15	MLF-AD04C	Current/Voltage Input (4 ch), Hi-resolution
16	MLF-DC04C	Current Output (4 ch), Hi-resolution
17	MLF-AH04A	Current/Voltage Input (2 ch), Current/Voltage Output (2 ch)
18	MLF-DC04A	Current Output (4 ch)
19	2MLI-D22A	Digital Input - DC 24V Input (Sink/Source Type), 16 ch
20	2MLI-D28A	Digital Input - DC 24V Input (Sink/Source Type), 64 ch
21	2MLQ-TR2A	Digital Output - TR Output, 0.5A (SinkType), 16 ch
22	2MLQ-TR8A	Digital Output - TR Output, 0.1A (SinkType), 64 ch
23	2MLF-AD16A	Analog Input - Voltage/Current Input Module, 16ch
24	2MLT-DMMA	DUMMY Module for empty I/O slots
Power Supply		
25	2MLP-ACF1	Free Voltage(110V,220V) / DC5V, 3A, DC24V,0.6A
26	2MLP-ACF2	Free Voltage(110V,220V) / DC5V, 6A
27	2MLP-AC23	AC220V / DC5V, 8.5A
28	2MLP-DC42	DC24V / DC5V
Smart Link Assemblies		
29	TG7-1H40S	Smart Link Terminal Board 40P
30	R32C-NS5A-40P	Relay Board, 40point (For DO Sink Type only)
TB Cable		
31	C40HF-15PB-1	Cable Assembly for Terminal Board, 40p-40p, 1.5m
32	C40HF-30PB-1	Cable Assembly for Terminal Board, 40p-40p, 3.0m
33	C40HH-15S-XBI	Smart Link Cable Ass'y 40-40P, 1.5 Meter
34	C40HH-30S-XBI	Smart Link Cable Ass'y 40-40P, 3.0 Meter

Experion® is a registered trademark of Honeywell International Inc.

ControlEdge™ is a trademark of Honeywell International, Inc.

LEAP™ is a paradigm shift in the way automation projects are implemented.

All other products and brand names shown are trademarks of their respective owners.

This document contains Honeywell proprietary information. It is published for the sole usage of Honeywell Process Solutions' customers and prospective customers worldwide. Information contained herein is to be used solely for the purpose submitted, and no part of this document or its contents shall be reproduced, published, or disclosed to a third party without the express permission of Honeywell International Inc.

While this information is presented in good faith and believed to be accurate, Honeywell disclaims the implied warranties of merchantability and fitness for a particular purpose and makes no express warranties except as may be stated in its written agreement with and for its customer.

In no event is Honeywell liable to anyone for any indirect, special or consequential damages. The information and specifications in this document are subject to change without notice.

CE03-100-180.1
June 2025
© 2025 Honeywell International Inc.