Industrial Safety Footwear
Spring 2015

Honeywell

Honeywell Safety Products is a leading supplier of footwear, offering the most comprehensive safety footwear product line in the Americas. The breadth of our products stems from six well-established yet differentiated safety footwear brands. Collectively, our footwear brands have over 400 years of industry history and experience in making superior work boots and shoes. Our diverse footwear product line allows our customers the convenience of one source to accommodate their safety footwear needs, with access to multiple styles, protective elements and price points to fit their needs and expectations.

by Honeywell

Premium footwear for Mining, Oil & Gas, Heavy Metal Fabrication, Construction & general industrial applications.

PAGE 6

by Honeywell

Rubber work boots that are built for rugged durability and extreme protection available in several styles to meet workers' needs.

PAGE 60

100% waterproof Neoprene boots with steel toe protection to keep workers safe and dry.

PAGE 26

by Honeywell

Premium footwear for Mining, Oil & Gas, Heavy Metal Fabrication, Construction & general industrial applications.

PAGE 78

by Honeywell

Top quality PVC and dipped Neoprene footwear, offering a wide range of protection from liquid and chemical hazards.

PAGE 36

Overshoes that protect your expensive work boots while adding traction and insulation in extreme weather conditions.

PAGE 90

Honeywell Boot Construction

Different constructions are suited to different environments and will help wearers be more comfortable, more stable, and better able to endure a long day on their feet. The boot construction illustrations and information can help guide you in choosing the correct safety footwear for your individual needs and working environment.

GOODYEAR™ WELT CONSTRUCTION

Goodyear welt construction is durable and strong, and allows for excellent forefoot torsion control for increased stability that helps to reduce leg and foot fatigue. Welted outsoles are generally repairable; when the outsole becomes worn over time a cobbler can remove and replace the outsole to save on cost of replacing the entire boot. Boots with welt construction are excellent for heavy duty work in Construction, Mining or Oil and Gas applications.

1. **The upper is drawn over the last and temporarily held while the welt is stitched**
2. **A welt (piece of material) is stitched to the upper and insole using a Goodyear welt machine. This hidden seam is strong and flexible**
3. **Welt is hand-stitched to the midsole and outsole. This is the visible seam that runs around the boot where the upper and outsole meet**

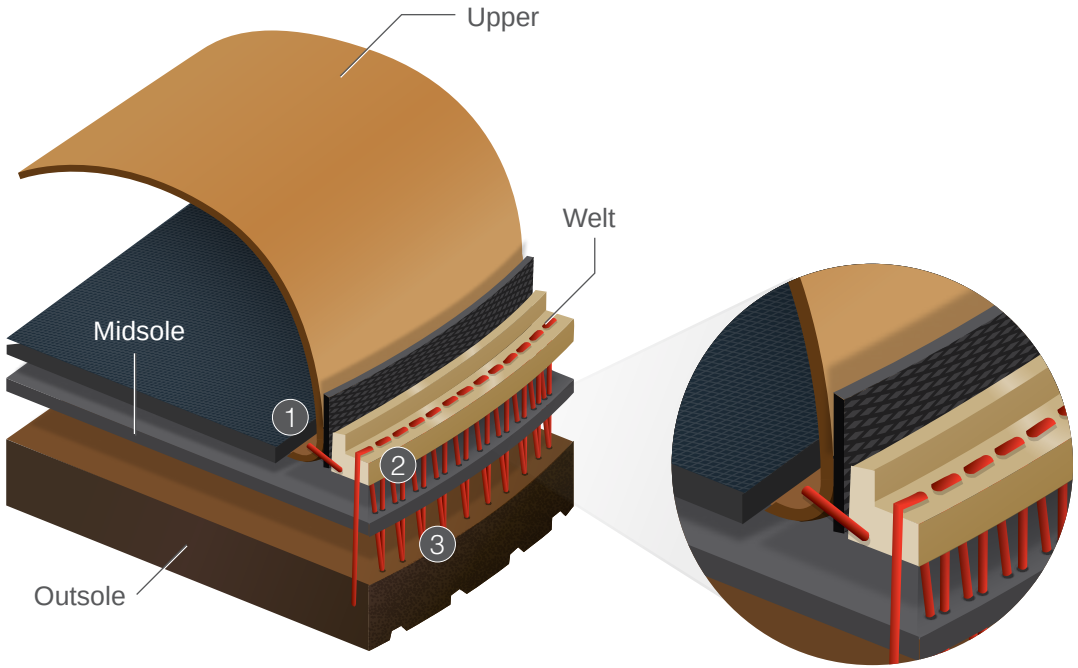

DIRECT ATTACH

Direct attach construction offers flexible comfort right out of the box. The sole is fused to the fibers of the upper to produce a tough, watertight bond. Direct attach work boots offer good forefoot torsion control on uneven surfaces to help minimize leg and foot fatigue. Direct attach also enables more cushion to be included for all day, sneaker-like-comfort.

1. **Rubber outsole is inserted into mold**
2. **Upper pattern is lowered, positioned and locked into mold**
3. **Midsole material is injected into mold, bonding the outsole and upper together**

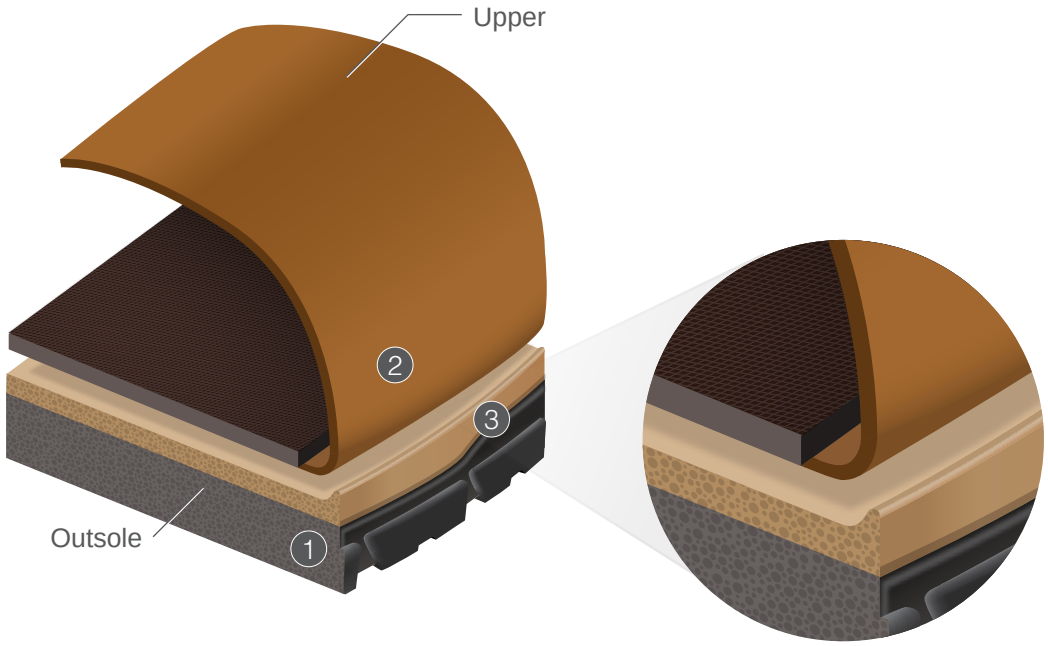

CEMENT CONSTRUCTION

Cement construction is lightweight and extremely flexible for out of the box comfort and is well suited for light duty work such as warehouse operations.

1. **Upper is stretched over the last and either stitched or stretched and cemented to a stroebel board**
2. **Leather is “roughed up” to allow adhesive to grip**
3. **Outsole is cement bonded to the sole using a water-based cement compound**

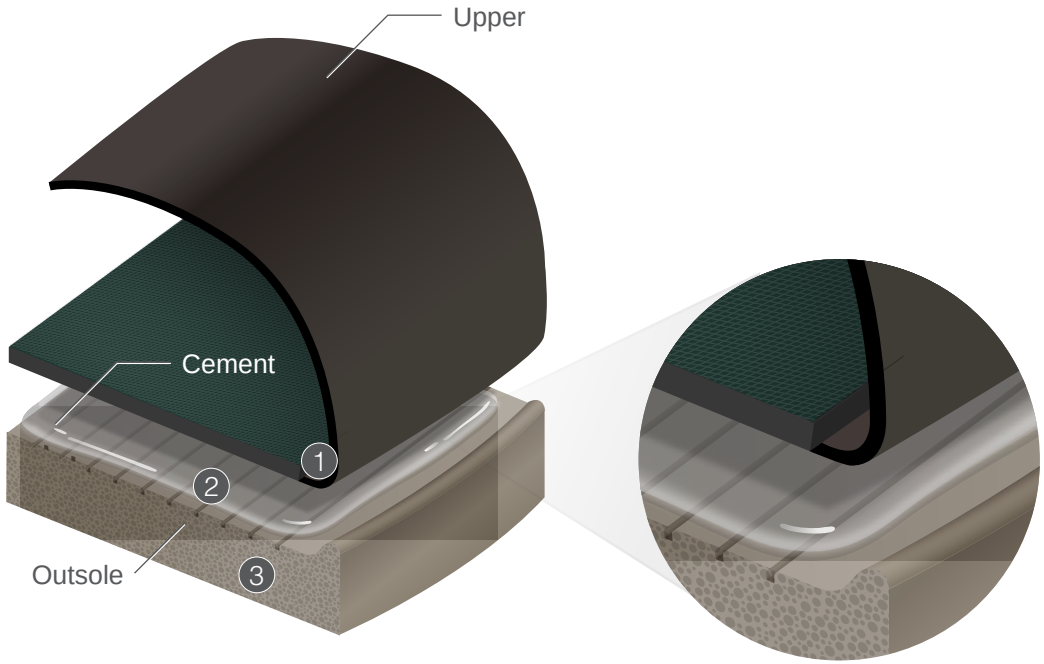

by Honeywell

Oliver® is a full line of quality footwear for Mining, Oil & Gas, Heavy Metal Fabrication, Construction and general industrial applications. The roots of Oliver footwear date back to the mid-1800s, in the mining fields of Australia. Oliver has a full and rich history of quality craftsmanship and technologically innovative features like XRD® metatarsal guards, NANOlite footbed comfort system, and NATUREform wide profile protective toe caps. Oliver boots are crafted for extreme comfort, performance and durability.

Over 125 years of proven performance in Australia's toughest industries, now available in the Americas.

Oliver Boot Technology

Oliver work boots bring their unique history of superior craftsmanship and experience in the most extreme working conditions to design the ultimate combination of rugged and comfortable. The boot cutaways allow an inside look as to how Oliver is one of the most comfortable and reliable boots on the market.

1. NANOlite Technology

The Oliver Comfort System has a unique NANOlite footbed for greater comfort and well-being. The gently raised surface of the sole massages your feet as you walk, promoting greater blood flow to help reduce fatigue. Plus, a perforated foam air control layer enhances air circulation, reducing odor.

2. COMFORTcushion Impact Absorption System

Oliver's unique COMFORTcushion uses a combination of cellular urethane and PORON® Performance Cushioning technology to protect the heel and ball of the foot, providing superior cushioning and shock absorption at the heel. This constant impact absorption helps reduce foot, leg and lower back fatigue.

3. NATUREform

Oliver NATUREform toe caps have a wide profile shape to suit your foot and are padded with a latex cushion liner to ensure toes are comfortable and not in contact with the cap.

4. XRD® Metatarsal Guard Extreme Impact Protection*

XRD® technology is not only comfortable, flexible and lightweight but frees you of rigid, bulky and constricting stiffeners and weight of external metatarsal guards. On impact, the XRD® high performance molecules create a unique protective shield that absorbs up to 90% of the most intense force – hit after hit – and exceeds ASTM F1614-11 testing standards.

xrd extreme impact protection

*Available in select Oliver work boots.

5. Lace Locking Hardware

Lace Locking Hardware allows laces to be tightened without strain. The locking device holds the lace in place as the remaining length of the laces are tightened to a custom fit. To release the lock, gently pull the laces forward and loosen the laces to easily remove the boot.

6. All-Terrain Dual Density Soling Technology

All-Terrain Dual Density Soling Technology combines soft, shock-absorbing low density rubber for the midsole and high density, hard wearing rubber for the outsole.

7. Padded collar

Padded collar and tongue provide excellent comfort and support for the wearer.

Look for icons for each Oliver boot that correspond to a specific type of protection or industry.

Protection Key

- ST STEEL TOE PROTECTION
- CT COMPOSITE TOE PROTECTION
- MT METATARSAL PROTECTION
- PR PUNCTURE RESISTANT
- EH ELECTRICAL HAZARD RATED OUTSOLE

Industry Key

- CN CONSTRUCTION
- MI MINING
- OG OIL & GAS
- HM HEAVY METAL
- MA MANUFACTURING
- FP FOOD PROCESSING
- FE FARM & EQUESTRIAN
- GP GENERAL PURPOSE

Inside Every Oliver Boot

Oliver work boots are equipped with advanced technology features to provide safety, durability and the ultimate comfort experience.

by Honeywell

65 Series

The Oliver 65 Series safety footwear specific to the Oil and Gas market features chemical, liquid- and barnyard acid-resistant SPR leather. Hard-wearing thermoplastic urethane (TPU) SAFETYcell reinforcement provides excellent protection from oils and minerals, cuts and abrasions.

65 Series Soling Technology

The AT's Dual Density PU / Rubber Soling Technology combines a soft shock-absorbing low density PU midsole with a high density hard wearing rubber outsole. The long wearing All-Terrain rubber outsole is designed for superior grip and durability.

AT's Rubber soling technology offers:

- Heat-resistant sole resists temperatures up to 572° F.
- Chemical-resistant sole resists mineral oils, acids, alkalies, animal fats and oils.
- Superior resistance to cutting and abrasion.
- Excellent slip resistance on uneven terrain or slick surfaces.

ST PR EH CN OG HM MA FE GP

65394

Brown leather, lace-up, 6 in (150mm)

- Steel toe impact protection
- Qflex Zero, non-metallic puncture protection
- Electrical hazard rated outsole
- Heavy duty Kevlar stitching on critical seams
- Meets ASTM F2413-11 M I/75 C/75 PR EH
- Men's sizes: 6-15 / 7.5-11.5

ST MT PR EH CN MI OG HM MA FE GP

65396 ①

Brown leather, pull-on Riggers 10 in (250mm)

- Steel toe impact protection
- XRD® metatarsal guard
- Qflex Zero, non-metallic puncture protection
- Electrical hazard rated outsole
- Meets ASTM F2413-11 M I/75 C/75 Mt/75 PR EH
- Men's sizes: 6-15 / 7.5-11.5

ST MT CN MI OG HM MA FE GP

65392 ②

Brown leather, lace-in zipper, 8 in (200mm)

- Steel toe impact protection
- XRD® metatarsal guard
- Heavy duty Kevlar® stitching on critical seams
- Meets ASTM F2413-11 M I/75 C/75 Mt/75 SD
- Men's sizes: 6-15 / 7.5-11.5

1

2

by Honeywell

65 Series

Oliver 65 Series safety footwear specific to the Mining industry feature liquid-resistant leather and a hard-wearing thermoplastic urethane (TPU) SAFETYcell reinforcement that provides excellent protection from oils and minerals, cuts and abrasions. Boots are lined with a SYMPATEX™ waterproof liner that is breathable to allow for cooling air flow, and features antimicrobial properties to eliminate odor-causing bacteria.

65 Series Soling Technology

The AT's Dual Density PU / Rubber Soling Technology combines a soft shock-absorbing low density PU midsole with a high density hard wearing rubber outsole. The long wearing All-Terrain rubber outsole is designed for superior grip and durability.

AT's Rubber soling technology offers:

- Heat-resistant sole resists temperatures up to 572° F.
- Chemical-resistant sole resists mineral oils, acids, alkalies, animal fats and oils.
- Superior resistance to cutting and abrasion.
- Excellent slip resistance on uneven terrain or slick surfaces.

The Snake Protect boot features a tough snake-bite material that resists fang penetration; especially important in mining environments when walking through brush, streams or near rock formations.

View the Oliver Boot Snake Protection Video

ST MT PR CN MI OG HM FE GP

65698

Mossy Oak® and black leather, lace-up, 14 in (350mm)

- Snake bite-resistant fabric
- Steel toe impact protection
- XRD® metatarsal guard
- Qflex Zero, non-metallic puncture protection
- SYMPATEX™ waterproof liner keeps feet dry
- Meets ASTM F2413-11 M I/75 C/75 Mt/75 PR SD
- Men's sizes: 6-15 / 7.5-11.5

ST MT PR MI OG FE

65690 ①

Black leather, lace-up, 10 in (250mm)

- Steel toe impact protection
- XRD® metatarsal guard
- Qflex Zero, non-metallic puncture protection
- SYMPATEX™ waterproof liner keeps feet dry
- Meets ASTM F2413-11 M I/75 C/75 Mt/75 PR SD
- Men's sizes: 6-15 / 7.5-11.5

ST MT PR MI OG FE

65691 ②

Black leather, lace-up, 14 in (350mm)

- Steel toe impact protection
- XRD® metatarsal guard
- Qflex Zero, non-metallic puncture protection
- SYMPATEX™ waterproof liner keeps feet dry
- Meets ASTM F2413-11 M I/75 C/75 Mt/75 PR SD
- Men's sizes: 6-15 / 7.5-11.5

1

2

by Honeywell

55 Series

Oliver 55 Series safety footwear features liquid-resistant leather(s) and TECtuff toe and heel bumpers to help prevent cuts and abrasions.

55 Series Soling Technology

The AT's Dual Density PU / Rubber Soling Technology combines a soft shock-absorbing low-density PU midsole with a high density hard wearing rubber outsole. The long wearing All-Terrain rubber outsole is designed for superior grip and durability.

AT's Rubber soling technology offers:

- Heat-resistant sole resists temperatures up to 572° F.
- Chemical-resistant sole resists mineral oils, acids, alkalies, animal fats and oils.
- Superior resistance to cutting and abrasion.
- Excellent slip resistance on uneven terrain or slick surfaces.

ST CN MA FE GP

55231

Nubuck brown leather, lace-up, 6 in (150mm)

- Steel toe impact protection
- Meets ASTM F2413-11 M I/75 C/75 SD
- Men's sizes: 6-15 / 7.5-11.5

ST CN MA FE GP

55232 ①

Wheat leather, lace-up, 6 in (150mm)

- Steel toe impact protection
- Meets ASTM F2413-11 M I/75 C/75 SD
- Men's sizes: 6-15 / 7.5-11.5

ST MT PR EH CN MI OG HM MA FE GP

55246 ②

Black leather, lace-up, 6 in (150mm)

- Steel toe impact protection
- XRD® metatarsal guard
- Qflex Zero, non-metallic puncture protection
- Electrical hazard rated outsole
- Meets ASTM F2413-11 M I/75 C/75 Mt/75 PR EH
- Men's sizes: 6-15 / 7.5-11.5

2
1
OLIVER
OLIVER
OLIVER
AT'S

by Honeywell

45 Series

Oliver 45 Series safety footwear is constructed with liquid-resistant leather and features non-metallic eyelets for a truly non-metallic boot. Oliver's composite toe offers hi-impact protection and is 40% lighter than traditional steel toe caps for less fatigue when worn all day. Boots are fully lined, with padded collar and tongue for wearer comfort.

45 Series Soling Technology

The 45 Series all-terrain TPU soling technology consists of a lightweight, shock-absorbing low-density PU (polyurethane) midsole; the outsole cushions the foot with each step for excellent comfort.

AT's TPU soling technology offers:

- Heat-resistant sole resists temperatures up to 266° F.
- Chemical-resistant sole resists mineral oils, acids, alkalies, animal fats and oils.
- Superior resistance to cutting and abrasion.
- Excellent slip resistance on uneven terrain or slick surfaces.

CT EH CN MI OG MA GP

45633C

Wheat leather, lace-up, 6 in (150mm)

- Composite toe impact protection
- Electrical hazard rated outsole
- Non-metallic construction
- Meets ASTM F2413-11 M I/75 C/75 EH
- Men's sizes: 6-14 / 7.5-11.5

CT EH CN MI OG MA GP

45637C

Brown leather, lace-up, 6 in (150mm)

- Composite toe impact protection
- Electrical hazard rated outsole
- Non-metallic construction
- Meets ASTM F2413-11 M I/75 C/75 EH
- Men's sizes: 6-14 / 7.5-11.5

Outsole For All
45 Series Boots

CT EH CN MI OG MA GP

45646C

Black leather, lace-up, 6 in (150mm)

- Composite toe impact protection
- Electrical hazard rated outsole
- Non-metallic construction
- Meets ASTM F2413-11 M I/75 C/75 EH
- Men's sizes: 6-14 / 7.5-11.5

CT MT EH CN MI OG MA GP

45675C

Black leather, lace-up, 8 in (200mm)

- Composite toe impact protection
- XRD® metatarsal guard
- Electrical hazard rated outsole
- SYMPATEX™ waterproof and breathable membrane
- Meets ASTM F2413-11 M I/75 C/75 Mt/75 EH
- Men's sizes: 6-15 / 7.5-11.5

CT MT EH CN MI OG MA GP

45680C

Black leather, thermal, lace-up, 8 in (200mm)

- Composite toe impact protection
- XRD™ metatarsal guard
- Electrical hazard rated outsole
- SYMPATEX™ waterproof and breathable membrane
- 600 gram Thinsulate™ *Ultra* liner for sub zero environments
- Meets ASTM F2413-11 M I/75 C/75 MT/75 EH
- Men's sizes: 6-15 / 7.5-11.5

by Honeywell

Non-Safety Toe Footwear

Oliver 42 Series non-safety toe footwear is constructed with liquid-resistant leather. Boots are fully lined, with padded collar and tongue for wearer comfort.

The 42 Series All-Terrain TPU soling technology consists of a lightweight, shock absorbing low-density PU (polyurethane) midsole that cushions the foot with each step for excellent comfort. The Oliver outsole offers high abrasion resistance and rugged tread design to help prevent worker slips and falls. 42 Series outsole is heat-resistant to temperatures up to 266° F (130° C) as well as resistant to mineral oils, acids, alkalies, animal fats and oils.

Outsole for Both Non-Safety Toe Boots

EH
CN
GP

42637

Brown leather, lace-up, 6 in (150mm)

- Padded comfort collar and full bellow tongue
- Meets ASTM F2413-11 EH
- Men's sizes: 6-14 / 7.5-11.5

EH
CN
GP

42646

Black leather, lace-up, 6 in (150mm)

- Padded comfort collar and full bellow tongue
- Meets ASTM F2413-11 EH
- Men's sizes: 6-14 / 7.5-11.5

Outsole for Both Western Boots

EH
ST
CN
MI
OG
HM
MA
FE
GP

OL10001

Brown oiled full grain leather, pull-on Rigger, 10 in (254 mm)

- Square, steel toe impact protection
- Electrical hazard rated outsole
- Rubber heel guard to protect against scrapes and scratches
- Meets ASTM F2413-11 M I/75 C/75 EH
- Men's sizes: 7-14 / 7.5-11.5

AVAILABLE SUMMER 2015

EH
CN
FE
MA
GP

OL10002

Brown oiled full grain leather, pull-on Rigger, 10 in (254 mm)

- Non-safety toe western boot
- Electrical hazard rated outsole
- Rubber heel guard to protect against scrapes and scratches
- Meets ASTM F2413-11 EH
- Men's sizes: 7-14 / 7.5-11.5

AVAILABLE SUMMER 2015

BOOTMAKERS OLIVER SINCE 1887

by Honeywell

Western Boot

Oliver Square Toe Western boot offers safety, comfort and style. The Western boot features classic design elements with western patterned red stitching, Goodyear welted construction, and wide, durable pull-on loops. The square toe of our Western boot is tapered and sleek; we've removed the bulk while maintaining the safety with a steel toe that meets ASTM impact test ratings; also available with a non-safety toe.

As with all Oliver boots, comfort is paramount. The Western boot features a removable dual-density poured PU and open cell foam footbed for outstanding cushion, comfort and longevity.

The Western boot was developed with a welted construction that provides better forefoot torsion control and increased stability. The durable rubber outsole is resistant to organic and mineral oils, and the deep lug tread with heel provides additional safety when climbing ladders or stairs.

by Honeywell

Industrial Hikers

Oliver industrial hikers for men are engineered to offer the same exceptional comfort and durability that Oliver has become known for. The low- and mid-height hikers are designed to offer outstanding traction, breathability and comfort so workers never think about their feet throughout their work day. They provide all of the safety features needed to get the job done, and the styling to wear into the night.

- Thermoplastic polyurethane (TPU) cage surrounds and supports the foot; when laces are tightened the TPU cage locks heels in place to help reduce slippage and create a customized fit
- Tread design features large, angled lug channels along the perimeter to enhance stability and to squeegee liquid, oils and debris out from underfoot
- Center lug tread design is engineered for excellent slip resistance, and ergonomically designed flex-grooves at the heel and under the midfoot increase flexibility when in motion
- Removable dual-density poured PU and open cell foam footbed for outstanding cushion, comfort and longevity
- Durable, color-coordinated loops on the heel and tongue help to pull on boots with ease

ST
EH
CN
MA
FP
FE
GP

OL11111

Black/Gray/Blue, low-height hiker, 4 in (101.6 mm)

- Steel toe impact protection
- Electrical hazard rated outsole
- Tough rubber toe-guards protect from scrapes and scratches
- Meets ASTM F2413-11 M I/75 C/75 EH
- Men's sizes: 7-14 / 7.5-11.5

AVAILABLE SUMMER 2015

ST
EH
CN
MA
FP
FE
GP

OL11112

Black/Gray, mid-height hiker 5 in (127 mm)

- Steel toe impact protection
- Electrical hazard rated outsole
- Tough rubber toe-guards protect from scrapes and scratches
- Meets ASTM F2413-11 M I/75 C/75 EH
- Men's sizes: 7-14 / 7.5-11.5

AVAILABLE SUMMER 2015

ST
EH
CN
MA
FP
FE
GP

OL21111

Black/Bright Green, low-height hiker, 3.5 in (88.9 mm)

- Steel toe impact protection
- Electrical hazard rated outsole
- Meets ASTM F2413-11 F I/75 C/75 EH
- Women's sizes: 5-12 / 5.5-11.5

AVAILABLE SUMMER 2015

ST
EH
CN
MA
FP
FE
GP

OL21112

Black/Gray/Bright Blue, mid-height hiker, 5 in (127 mm)

- Steel toe impact protection
- Electrical hazard rated outsole
- Meets ASTM F2413-11 F I/75 C/75 EH
- Women's sizes: 5-12 / 5.5-11.5

AVAILABLE SUMMER 2015

BOOTMAKERS OLIVER SINCE 1887

by Honeywell

Women's Series Industrial Hikers

Women's Series industrial hikers are built for women on lasts that are specific and proportional to a woman's foot. These are the lightweight, breathable shoes you can wear all day long, while at work and after work, and feel confident your footwear is protecting you every step of the way.

- Suede leather uppers feature mesh cutouts to ventilate for cooler all day comfort
- Thermoplastic polyurethane (TPU) cage surrounds and supports the foot; when laces are tightened the TPU cage locks heels in place to help reduce slippage and create a customized fit
- Dual density Phylon midsole provides soft, but supportive comfort
- Durable rubber outsole features outstanding abrasion and slip resistance
- Center lug tread design is engineered for excellent slip resistance, and ergonomically designed flex-grooves increase flexibility when in motion
- Removable dual-density poured PU and open cell foam footbed for outstanding cushion, comfort and longevity

by Honeywell

Women's Series Leather Work Boots

Oliver's new Women's Series of boots are built for women – this is HER boot, not HIS boot for her. Oliver Women's Series boots are built on lasts that are specific and proportional to a women's foot. The Oliver Women's Series pays attention to details, with pops of color, enameled hardware, soft and durable materials and sleek designs. These work boots are durable and rugged enough for the harshest work environments, but designed with details only she can appreciate.

- Quality, soft full grain leather uppers are flexible yet still very durable
- Sleek steel toe design eliminates the clunky, chunky look women have had to put up with wearing men's boots sized down for a woman
- Goodyear welted construction allows resoling of outsoles rather than replacing the entire boot
- Padded collar and air mesh lining add comfort and reduce heat build-up, thereby reducing bacteria caused by perspiration
- Removable dual-density poured PU and open cell foam footbed provides outstanding cushion, comfort for all day wear
- Color coordinated hardware, stitching and linings add to the feminine styling of the boot

ST
EH
CN
MI
OG
HM
MA
FE
GP

OL22001

Brown leather, lace-up, 6 in (152 mm)

- Steel toe impact protection
- Electrical hazard rated outsole
- Classic rubber, logger style outsole provides excellent traction and slip resistance
- Removable leather kiltie
- Meets ASTM F2413-11 F I/75 C/75 EH
- Women's sizes: 5-12 / 5.5-11.5

AVAILABLE SPRING 2015

ST
EH
CN
MI
OG
HM
MA
FE
GP

OL23001

Brown leather, zip-up, 8 in (203 mm)

- Steel toe impact protection
- Electrical hazard rated outsole
- Classic rubber, logger style outsole provides excellent traction and slip resistance
- Durable zipper hardware is concealed under a leather overlay for protection and for a smooth finished appearance
- Meets ASTM F2413-11 F I/75 C/75 EH
- Women's sizes: 5-12 / 5.5-11.5

AVAILABLE SPRING 2015

ST PR MT EH HM MA

22205

Green PVC, pull-on, 16 in (406.4 mm)

- Steel toe cap for impact protection
- METprotect internal metatarsal impact protection
- Steelflex steel midsole for penetration protection
- Electrical hazard rated outsole
- Meets ASTM F2413-11 M I/75 C/75 Mt/75 PR EH
- Men's sizes: 6-14

by Honeywell

Premium PVC Boot

The Oliver PVC gumboot is an injection molded, seamless boot that provides 100% waterproof protection. The PVC compound is soft and pliable for outstanding flexibility for greater worker comfort. The gumboot features a NANOlite footbed and NATUREform toe caps for a wider profile shape to allow more room for toes to flex and bend.

The 22 Series sole consists of a hard wearing and heavy duty PVC/Nitrile compound with an extra deep tread for greater stability and grip on uneven and loose surfaces. The 22 Series outsole is heat resistant up to 266° F (130° C) and provides excellent slip and abrasion resistance. PVC and Nitrile compound is resistant to solvents, mild acids, alkalis, oils and fats, and will not mark up floors.

by Honeywell

Smelter Boot

The Oliver smelter boot features a heat-resistant and flame retardant leather to provide excellent protection from hot metal. The hook and loop closure system allows for quick removal in emergency situations. The boot is stitched with Kevlar® fiber thread, which is inherently flame-resistant to ensure long lasting construction and durability.

25 Series Soling Technology

The HS Dual-Density Nitrile Rubber Soling System provides added safety in hot fabrication environments. The dual-density design combines a soft shock-absorbing, low-density air rated rubber midsole to cushion the foot, with a high-density, hard-wearing outsole. The 25 Series outsole provides excellent comfort and flexibility.

HS's rubber soling technology offers:

- Heat resistant sole is heat resistant up to temperatures of 572° F.
- Chemical resistant sole is resistant to mineral oils, acids, alkalies, animal fats and oils.
- The outsole provides superior resistance to cutting and abrasion.

ST MT EH HM

25299

Black leather, hook and loop closure, 6 in (150mm)

- Alloy toe cap is 40% lighter than traditional steel toe
- External metatarsal guard
- Electrical hazard rated outsole
- Meets ASTM F2413-11 M I/75 C/75 Mt/75 EH
- Men's sizes: 6-15 / 7.5-11.5

View the Oliver Smelter Boot Video

METGUARD

The Original Muck Boot Company began with a single goal: to provide the most comfortable, 100% waterproof, high-performance footwear on the market. Today, the Muck® Boot brand defines the standard reference for comfort, fit and quality.

Muck Boot Company has designed industrial safety boots to tackle the toughest working environments, while providing exceptional comfort.

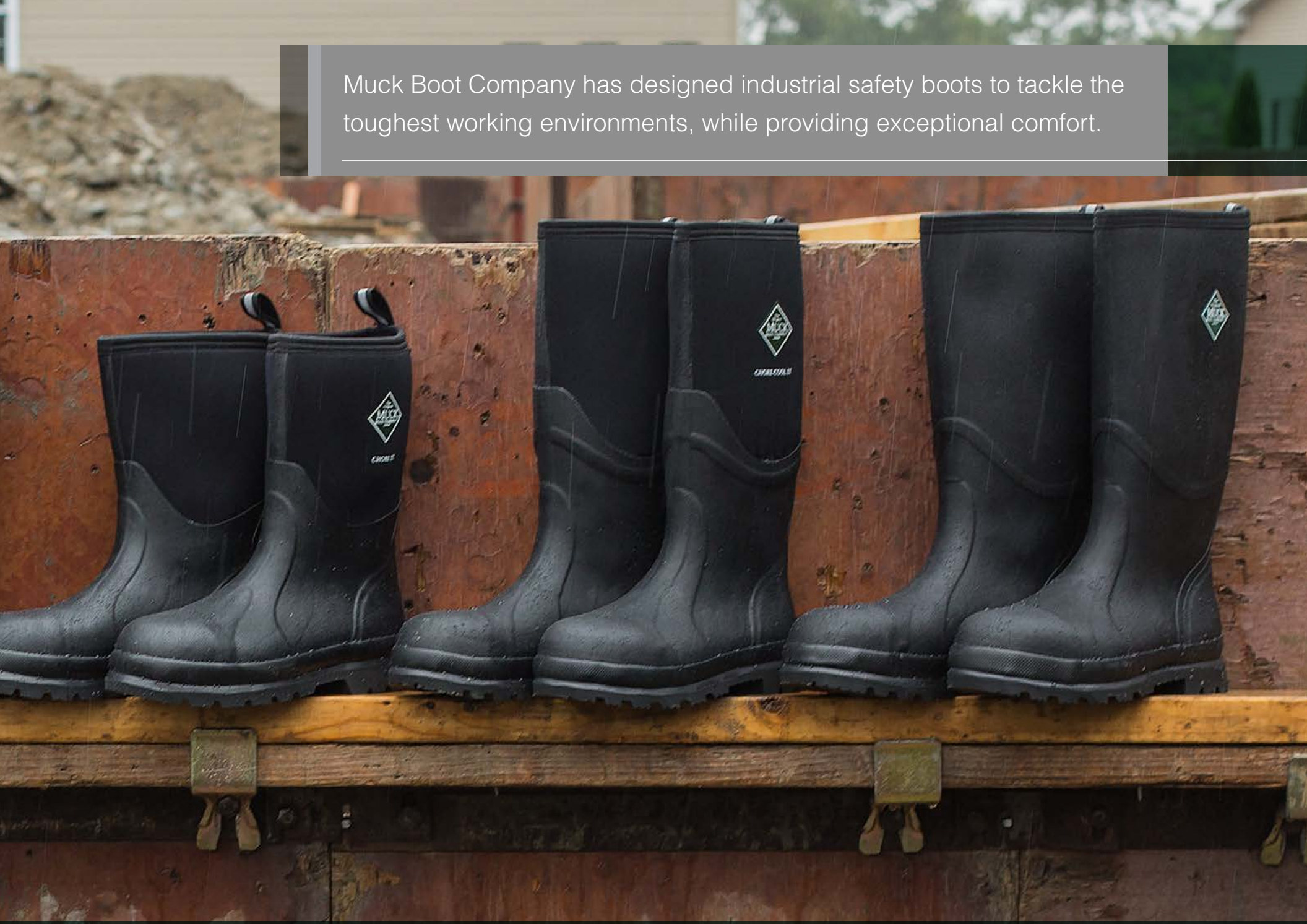

Muck Boot Technology

Muck work boots feature many safety and comfort enhancements to protect workers better and keep workers' feet dry and comfortable for all-day wear. The boot cutaways allow an inside look as to how Muck is one of the most comfortable and reliable boots on the market.

1. etc® Sock Lining

etc® sock lining reduces under foot friction and heat build-up, allowing for a more comfortable overall feel.

2. Spandura®

Spandura® is an added layer over Neoprene to protect against wear and increase the life of your boots.

3. High Grade Rubber Exterior

High grade rubber exterior provides a tough waterproof barrier.

4. EVA Cushion Midsole

EVA contoured molded midsole provides additional support and comfort.

5. XpressCool™

XpressCool™ material featured in Muck's Chore Cool boots offers antimicrobial properties which protect against bacteria, fungus and other microorganisms.

6. Outsole Lugs

Wide, broad lugs for improved surface contact.

7. Ladder Rung Grips

Ladder rung grips to improve stability.

8. Rubber Overlays

Rubber overlays provide structure and stability to ankle and heel cup with added layers at the heel and toe for greater abrasion resistance.

9. The Rand

The rand binds the upper and outsole together and provides abrasion resistance, stability and structure to the boot.

Look for icons for each Muck boot that correspond to a specific type of protection or industry.

Protection Key

- ST STEEL TOE PROTECTION
- CT COMPOSITE TOE PROTECTION
- MT METATARSAL PROTECTION
- PR PUNCTURE RESISTANT
- EH ELECTRICAL HAZARD RATED OUTSOLE

Industry Key

- CN CONSTRUCTION
- MI MINING
- OG OIL & GAS
- HM HEAVY METAL
- MA MANUFACTURING
- FP FOOD PROCESSING
- FE FARM & EQUESTRIAN
- GP GENERAL PURPOSE

Inside Every Muck Boot

Made for extreme conditions, the technology used in Muck boots keep worker's feet dry, comfortable and safe in harsh environments.

Chore Cool Series
featuring XpressCool™ lining

As the foot starts to sweat, the Muck XpressCool™ fabric lining rapidly pulls moisture away from your skin to dryer areas of the boot. As this moisture is spread and dries, it creates a cooling affect which keeps your feet cool and dry in warm weather.

- Comfortable XpressCool™ lining material keeps your feet cool and dry in warm weather
- 4mm CR flex-foam bootie with four way stretch nylon is 100% waterproof, lightweight and flexible
- Upper is triple reinforced in the toe area and quadruple reinforced in the heel area
- Steel shank for additional arch support
- Steel toe impact protection
- etc® sockliner lining to reduce friction and heat build up
- Vibram outsole for improved durability and performance

ST EH CN MI OG MA FP FE GP

Chore Pro Cool, Mossy Oak

CPCS-INFT Mossy Oak Pattern, 16 in

- Full rubber coverage
- Steel toe impact protection
- Comfort range Sub Freezing to 95° F / 35° C
- Meets ASTM-F2413-11 M I/75 C/75 EH
- Men's size 5-14, Women's size 6-13

AVAILABLE SPRING 2015

ST EH CN MI OG MA FP FE GP

Chore Pro Cool ①

CPCT-000 Black, 16 in

- Full rubber coverage
- Spandura® added to the exterior of the neoprene for added protection against wear and abrasion
- Steel toe impact protection
- Comfort range Sub Freezing to 95° F / 35° C
- Meets ASTM-F2413-11 M I/75 C/75 EH
- Men's sizes: 5-14, Women's sizes: 6-13

ST EH CN MI OG MA FP FE GP

Chore Cool ②

CSCT-000 Black, 16 in

- Steel toe impact protection
- Comfort range Sub Freezing to 95° F / 35° C
- Meets ASTM-F2413-11 M I/75 C/75 EH
- Men's sizes: 5-14, Women's sizes: 6-13

The Original MUCK BOOT COMPANY
CHORE COOL 5T
1
2

Arctic Series

Arctic Series is an insulated boot for extreme weather conditions. The CR flex-foam bootie is fleece lined to insulate against the cold and wind in temperature down to -60° F.

- 100% waterproof, light-weight and flexible
- Fleece lined for added thermal comfort
- Steel toe protection
- Double reinforcements on the instep, heel and achilles
- 2mm thermal foam underlay added to the instep area for additional warmth
- Added toe protection with wrap-up bumper
- EVA molded midsole with contoured footbed

ST
EH
CN
MI
OG
MA
FP
GP

Arctic Pro Steel Toe

ACP-STL0 Black, 16 in

- 8mm CR flex-foam bootie with four way stretch nylon
- Steel toe impact protection
- Bob-Tracker molded outsole is rugged, aggressive and durable for maximum protection and stability
- Meets ASTM-F2413-11 M I/75 C/75 EH
- Comfort range Sub Freezing to -60° F / -50° C to 40° F / 4° C
- Men's sizes: 7-14, Women's sizes: 8-13 (unisex)

ST
EH
CN
MI
OG
MA
FP
GP

Arctic Sport Steel Toe

ASP-STL Black, 16 in

- 5 mm CR flex-foam bootie with four way stretch nylon is 100% waterproof, light-weight and flexible
- Steel toe impact protection
- MS-1 molded outsole is rugged, aggressive and durable for maximum protection and stability
- Meets ASTM-F2413-11 M I/75 C/75 EH
- Comfort range Sub Freezing to -40° F / -40° C to 60° F / 15° C
- Men's sizes: 7-14, Women's sizes: 8-13 (unisex)

EH
CN
MI
OG
MA
FP
GP

Chore 16"

CHH-000A Black, 16 in

- Non-safety toe work boot
- Meets ASTM F2413-11 EH
- Comfort range Sub Freezing to 85° F / 30° C
- Men's sizes:5-16, Women's sizes: 6-13 (unisex)

EH
CN
MI
OG
MA
FP
GP

Chore 12"

CHM-000A Black, 12 in

- Non-safety toe work boot
- Meets ASTM F2413-11 EH
- Comfort range Sub Freezing to 85° F / 30° C
- Men's sizes:5-16, Women's sizes: 6-13 (unisex)

Work Chore Series

Non-Safety Toe

Tough, durable, 100% waterproof work boots to keep worker's feet warm and dry in wet, muddy conditions.

- 5mm CR flex-foam bootie with four-way stretch nylon
- 100% waterproof, lightweight and flexible
- Steel shank for additional arch support
- Upper is triple reinforced in the toe area and quadruple reinforced in the heel area for longer boot life and durability
- Durable, lightweight, rubber outsole with self-cleaning channels for optimal slip-resistance
- Removable EVA contoured cushion midsole
- Extra wide kick off lugs for easy hands free removal

Work Chore Series

Steel Toe

Work boots meet all requirements for the toughest work conditions while surpassing maximum protection and comfort.

- 5mm CR flex-foam bootie with 4-way stretch nylon
- 100% waterproof, lightweight and flexible
- Steel shank for additional arch support
- Upper is triple reinforced in the toe area and quadruple reinforced in the heel area for longer boot life and durability
- Durable, lightweight, rubber outsole with self-cleaning channels for optimal slip-resistance
- Removable EVA sock liner
- Extra wide kick off lugs for easy hands free removal

ST MT EH CN MI OG MA FP GP

Chore Meta

CHS-META Black, 16 in

- Steel toe impact protection
- XRD® metatarsal guard
- Meets ASTM F2413-11 M I/75 C/75 Mt/75 EH
- Comfort range Sub Freezing to 85° F / 30° C
- Men's sizes: 5-14, Women's sizes: 6-13

ST EH CN MI OG MA FP FE GP

Chore Steel Toe - Mid ①

CMS-000A Black, 12 in

- Steel toe impact protection
- Meets ASTM F2413-11 M I/75 C/75 EH
- Comfort range Sub Freezing to 85° F / 30° C
- Men's sizes: 5-14, Women's sizes: 6-13

ST EH CN MI OG FE FP FE GP

Chore Steel Toe - Hi ②

CHS-000A Black, 16 in

- Steel toe impact protection
- Meets ASTM F2413-11 M I/75 C/75 EH
- Comfort range Sub Freezing to 85° F / 30° C
- Men's sizes: 5-14, Women's sizes: 6-13

1
2
CHORE ST
CHORE ST

SERVUS®
by Honeywell

Servus® is Honeywell's quality PVC and dipped Neoprene line of footwear, offering a wide range of protection from liquid and chemical hazards ranging from organic, common in petrochemical and food processing industries, to acids and oils in heavy manufacturing industries.

Servus boots are constructed with the finest materials to insure optimal durability, protection and comfort, and all Servus PVC safety footwear is manufactured in the USA.

Servus Boot Technology

Servus PVC, injection molded work boots with Triple Density Technology (TDT™) provide 100% waterproof reliability, and safety from liquid and chemical hazards. The boot cutaways allow an inside look as to how Servus PVC boots provide watertight safety and durability.

TDT™ (Triple Density Technology)

TDT™ (Triple Density Technology) allows injection molded footwear to have three distinct compounds merged in each boot. Compounds for wear and traction can be balanced with compounds for specific chemical resistance to create boots that are tougher and more reliable in harsh environments.

1. **Molded Uppers**
   Offer seamless, waterproof protection.

2. **Contour molding**
   fits comfortably without heel slippage.

3. **Extra Thick Guards**
   Extra thick toe and heel guards protect against knocks and wear.

4. **Color-coded midsole**
   Color-coded midsole stripes indicate safety toe presence; yellow indicates steel toe, red indicates non-safety toe.

5. **Kick-off Lugs**
   Higher and wider kick-off lugs make removing boots easier and with less strain. Also allows wearer to kick off the boots without having to touch any contaminants that may be on the boot.

6. **Extended steel shanks**
   Extended steel shanks bridge the instep and are arched and ribbed for strength and support. They provide more comfort and safety on ladder rungs.

7. **FOOT FORM™**
   FOOT FORM™ contour cushion insoles are lightweight and form to the foot and provide excellent arch and heel support. Insoles are removable and washable, and replaceable when needed.

8. **Dual Densisty Outsoles**
   TDT™ compounding allows the outsole to have two formulas; a tough, abrasion-resistant compound for the outsole perimeter and a softer slip-resistant formula for the centersole treads.

9. **Perimeter Outsoles**
   The perimeter outsoles are composed of a high molecular weight compound created for abrasion resistance as well as oil, chemical, and blood and fat deterioration resistance. Self-cleaning triangular outsole cleats provide better tread to surface contact to reduce slips and falls.

Look for icons for each Servus boot that correspond to a specific type of protection or industry.

Protection Key

- ST STEEL TOE PROTECTION
- CT COMPOSITE TOE PROTECTION
- MT METATARSAL PROTECTION
- PR PUNCTURE RESISTANT
- EH ELECTRICAL HAZARD RATED OUTSOLE

Industry Key

- CN CONSTRUCTION
- MI MINING
- OG OIL & GAS
- HM HEAVY METAL
- MA MANUFACTURING
- FP FOOD PROCESSING
- FE FARM & EQUESTRIAN
- GP GENERAL PURPOSE

Inside Every Servus Boot

Injection molded PVC work boots are 100% waterproof to keep workers' feet dry and comfortable in wet conditions. Servus PVC boots are made in the U.S.A.

SERVUS by Honeywell

PRO+™

Pro+ features TDT™ innovations and an advanced outsole tread system with an aggressive tread along the perimeter of the outsole and a highly slip-resistant tread along the mid-foot and heel, maximizing surface area contact helping to prevent hydroplaning.

PRO®

Servus® Pro® features TDT innovations and a compound blend engineered to withstand organic chemical deterioration common in meat processing and petrochemical industries

- TDT™ uses proprietary compound formulations for increased resistance to degradation from many harsh chemicals
- Injection molded PVC is seamless and 100% waterproof
- Extra thick toe and heel guards protect against abrasion and wear
- FOOT FORM™ contour cushion insoles are lightweight with lift at the arch and support at the heel; insoles are removable, washable and replaceable

ST
CN
OG
FP
FE
GP

75105

Gray / Yellow / Beige, 15 in

- Steel toe impact protection
- Meets ASTM F2413-11 M I/75 C/75
- Men's whole sizes: 5-15

CN
OG
FP
FE
GP

75102

Gray / Red / Black, 15 in

- Non-safety toe work boot
- Meets ASTM F2413-1 EH
- Men's whole sizes: 5-15

ST
EH
CN
OG
FP
FE
GP

75101 ①

Gray / Yellow / Black, 15 in

- Steel toe impact protection
- Meets ASTM F2413-11 M I/75 C/75 EH
- Men's whole sizes: 5-15

All Servus PVC boots are made in the U.S.A.

SERVUS
by Honeywell

XTP® (Xtra Traction Performance)

Features TDT innovations and a compound blend engineered to withstand organic chemical deterioration common in poultry, fish processing, as well as oil rigs and general industrial applications. Self-cleaning outsole clears away debris with every step.

- Seamless, injection molded footwear is 100% waterproof to ensure workers' feet are dry and comfortable
- Outsole perimeter is formulated for tough, long-wearing support
- Centersole is dual compounded for cushioning, long wear and traction on slick surfaces
- Steel shank is longer, wider and thicker for outstanding arch support
- Removable FOOT FORM contour cushion insoles provide all-day comfort and support
- Open pattern outsole design self-cleans liquid and debris with every step, helping to prevent slip and trip hazards

CN
OG
FP
FE
GP

75108 ①

Black / Red/ Gray, 15 in

- Non-safety toe work boot
- Men's whole sizes: 3-15

ST
CN
OG
FP
FE
GP

75121 ②

Forest Green / Blue / Tan, 15 in

- Steel toe impact protection
- Meets ASTM F2413-11 M I/75 C/75
- Men's whole sizes: 3-15

ST
EH
CN
OG
FP
FE
GP

75109 ③

Black / Yellow / Gray, 15 in

- Steel toe impact protection
- Meets ASTM F2413-11 M I/75 C/75 EH
- Men's whole sizes 3-15

ST
CN
OG
FP
FE
GP

75119 ④

White / Pink / Black, 15 in

- Steel toe impact protection
- Meets ASTM F2413-11 M I/75 C/75
- Women's whole sizes: 5-11
  Men's whole sizes: 3-12

All Servus PVC boots are made in the U.S.A.

4

3

SERVUS by Honeywell

Puncture Resistant Midsole

PVC injection molded work boot features steel midsoles to provide extra protection underfoot, minimizing accidental punctures in areas with risk of stepping on glass, metal or other sharp objects.

- Seamless, injection molded footwear is 100% waterproof to ensure workers' feet are dry and comfortable
- Steel shank is longer, wider and thicker for outstanding arch support
- Removable FOOT FORM contour cushion insoles provide all-day comfort and support
- Open pattern, self-cleaning outsole design clears liquid and debris with every step, helping to prevent slip and trip hazards

ST PR EH CN OG FP FE GP

75145C

Black / Orange, 15 in

- Steel toe impact protection
- Flexible steel midsole for puncture protection
- Meets ASTM F2413-11 M I/75 C/75 PR EH
- Men's whole sizes: 7-14

All Servus PVC boots are made in the U.S.A.

CN OG FP FE GP

75122

Gray / Red / Black, 15 in

- Non-safety toe work boot
- Men's whole sizes: 5-13

CN OG FP FE GP

75126

Navy / Red / Black, 15 in

- Non-safety toe work boot
- Men's whole sizes: 3-15; Women's whole sizes: 5-11

CN OG FP FE GP

75120

Olive / Green / Brown, 15 in

- Non-safety toe work boot
- Men's whole sizes: 3-15

All Servus PVC boots are made in the U.S.A.

SERVUS by Honeywell

MAX

Features TDT innovations and a compound blend engineered to withstand degradation from many harsh chemicals. Injection molded construction allows for a dual PVC outsole, the perimeter is formulated for abrasion and long wear, while the center sole is softer to allow more surface to surface contact to control traction on slick surfaces.

- Seamless, TDT™ technology injection molded footwear is 100% waterproof to ensure workers' feet are dry and comfortable
- Outsole perimeter is formulated for tough, long-wearing support
- Centersole is dual compounded for cushioning, long wear and traction on slick surfaces
- Steel shank is longer, wider and thicker for outstanding arch support
- Removable FOOT FORM contour cushion insoles provide all-day comfort and support
- Open pattern outsole design self-cleans liquid and debris with every step, helping to prevent slip and trip hazards

SERVUS
by Honeywell

Iron Duke®

PVC polyblend injection molded work boots combine flexible and comfortable uppers with durable hard-wearing outsoles. The Iron Duke PVC blend stays flexible, even at colder temperatures, and are reinforced at critical stress points for longer wear.

- Seamless, PVC injection molded footwear is 100% waterproof to ensure workers' feet are dry and comfortable
- PVC formulation is resistant to degradation from agricultural chemicals, fertilizers and animal waste
- Flexible and durable upper allows for ease in movement for greater worker comfort
- Removable FOOT FORM contour cushion insole
- Reinforced construction at critical stress points provides a durable and long wearing boot
- Deep angle cleat outsole help to grip slick surfaces to help prevent slips and falls
- Easy guide along the shaft to customize the boot height

ST EH CN OG FP FE GP

73104

Iron Duke Shoe, Black, 6 in

- Poly-blend PVC, 5-eyelet safety shoe
- Steel toe impact protection
- Deep V-Trac sole and heel for added traction
- Meets ASTM F2413-11 M I/75 C/75 EH
- Men's whole sizes: 6-13

ST EH CN OG FP FE GP

73505

Safety, Black / Red, 15 in

- Steel toe impact protection
- Meets ASTM F2413-11 M I/75 C/75 EH
- Men's whole sizes: 6-13

CN OG FP FE GP

18805

Work Boot, Brown, 15 in

- Non-safety toe work boot
- Meets ASTM F2413-11 EH
- Men's whole sizes: 3-13

CN OG FP FE GP

74928

Shrimp Boot, White / Tan, 12 in

- Non-safety toe work boot
- Meets ASTM F2413-11 EH
- Men's whole sizes: 4-13

All Servus PVC boots are made in the U.S.A.

ST EH CN OG FP FE GP

18801 ①

Black / Gray, 15 in

- Steel toe impact protection
- Meets ASTM F2413-11 M I/75 C/75 EH
- Men's whole sizes: 5-13

CN OG FP FE GP

18802 ①

Black / Gray, 15 in

- Non-safety toe work boot
- Meets ASTM F2413-11
- Men's whole sizes: 5-13

ST CN OG FP FE GP

18803 ②

White/ White, 15 in

- Steel toe impact protection
- Meets ASTM F2413-11 M I/75 C/75
- Men's whole sizes: 5-13

All Servus PVC boots are made in the U.S.A.

SERVUS by Honeywell

CT™ (Comfort Technology)

PVC injection molded boots feature exceptional comfort and function at a value price. Good boot for food processing, custodial and general purpose industries

- Seamless, PVC injection molded footwear is 100% waterproof to ensure workers' feet are dry and comfortable
- PVC formulation is resistant to degradation from agricultural chemicals, fertilizers and animal waste
- Flexible and durable upper allows for ease in movement for greater worker comfort
- Removable FOOT FORM contour cushion insole
- Reinforced construction at critical stress points provides a durable and long wearing boot
- Deep angle cleat outsole help to grip slick surfaces to help prevent slips and falls
- Easy guide along the shaft to customize the boot height

Outsole For All Comfort Technology boots

CN FE GP

18822

Black, 14 in

- Non-safety toe work boot
- Meets ASTM F2413-11 EH
- Men's whole sizes: 3-15

ST EH CN OG FP FE GP

18821 ①

Black, 14 in

- Steel toe impact protection
- Meet ASTM F2413-11 M I/75 C/75 EH
- Men's whole sizes: 3-15

ST CN OG FP FE GP

18837 ②

Forest Green / Tan, 14 in

- Steel toe impact protection
- Meet ASTM F2413-11 M I/75 C/75
- Men's whole sizes: 3-15

ST CN OG FP FE GP

18835 ③

Yellow / Black, 14 in

- Steel toe impact protection
- Meet ASTM F2413-11 M I/75 C/75
- Men's whole sizes: 3-15

ST CN OG FP FE GP

18839 ④

White / White, 14 in

- Steel toe impact protection
- Meet ASTM F2413-11 M I/75 C/75
- Men's whole sizes: 3-15

1
2
3
4

SERVUS by Honeywell

SF Overboots

PVC Dual-Compound Overboots

Made in the USA, the SF overboot dual PVC compound is formulated for long-lasting wear and durability. Supersized, SF overboots fit over large work and recreational footwear to protect them from liquids, dirt, mud and other deteriorating elements.

SF Overboot Features

- Dual PVC compounds allow for a stretchy top and durable, longwearing outsole
- 100% waterproof protection to keep work boots, and feet, dry
- Over-sized design to fit over work boots to protect them from harsh environments, increasing the longevity of expensive footwear
- Extra large molded kick-off lugs for easy, hands-free removal
- Boot buttons are molded to eliminate seams, providing waterproof protection
- Closure loops are tabbed to allow for easy, one-hand closure even when wearing gloves

Servus SF Overboot Size Conversions

Sizes:	XS	S	M	L	XL
Fits Men's Sizes:	4 - 5	6 - 8	9 -10	14 - 13	14 - 15

FP MA GP

11003 ①

Black / Yellow, 4 in

- 12 pair/case, bag
- Available in sizes: XS-XL

FP MA GP

11004B

Black / Yellow, 4 in

- 12 pair/case, box
- Available in sizes: S-XL

FP MA GP

11001 ②

Black / Yellow, 12 in

- 6 pair/case, bag
- Available in sizes: XS-XL

FP MA GP

11002B

Black /Yellow, 12 in

- 6 pair/case, box
- Available in sizes: S-XL

FP MA GP

11095 ③

Chem Overboot, Black, 12 in

- *Tested to meet the chemical requirements of MIL-0-43995C and Commercial specification A-A-59520*
- Provides added protection in applications such as waste disposal and hazardous chemical handling
- 6 pair/case, bag
- Available in sizes: S-XL

FP
GP

11993 ①

Black, 4 in

- 12 pair/case, bag
- Available in sizes: XS-XL

FP
GP

11993B

Black, 4 in

- 12 pair/case, box
- Available in sizes: XS-XL

FP
GP

11924 ②

Black, 12 in

- 6 pair/case, bag
- Available in sizes: XS-XL

FP
GP

11924B

Black, 12 in

- 6 pair/case, box
- Available in sizes: XS-XL

FP
GP

11994 ③

Yellow, 4 in

- 12 pair/case, bag
- Available in sizes: XS-XL

FP
GP

11926 ④

Yellow, 12 in

- 6 pair/case, bag
- Available in sizes: XS-XL

SERVUS by Honeywell

SF Overboots

Made in the USA, the PVC SF overboot is supersized to fit over large work and recreational footwear, protecting them from liquids, dirt, mud and other deteriorating elements.

- PVC injection molded footwear is 100% waterproof to protect expensive work boots or shoes
- Over-sized design fits over large work boots to protect them from harsh environments and increase boot life
- Extra large molded kick-off lugs for easy boot removal
- Boot buttons are molded to eliminate seams, providing waterproof protection
- Closure loops are tabbed to allow for easy, one hand closure, even when wearing gloves

Servus Dipped Neoprene Boot Technology

Servus dipped neoprene work boot construction provides 100% waterproof reliability and safety from liquidand chemical hazards, as well as variations of slip-resistant outsoles. The boot cutaways allow an inside look as to how Servus dipped neoprene boots provide watertight safety and durability.

1. Triple-Dipped Rubber

Servus dipped neoprene footwear is triple-dipped to create a seamless coating of rubber that is highly resistant to many organic and inorganic chemicals. Vulcanizing further seals and strengthens this superior watertight material

2. Neoprene Latex Rubber

Neoprene latex rubber is softer, lighter and far more pliable than ordinary rubber, making neoprene boots more comfortable and flexible

3. Fabric Lining

Fabric linings are soft and durable. Feet slide easily in and out. Moisture and condensation are wicked away.

4. Toe and Heel Gaurds

Extra thick toe and heel guards help to protect against knocks and wear.

5. Hand-Layered Construction

Hand-layered construction allows flex and strength at critical stress points

6. Heel Counters

Heel counters reduce heel slippage and provide form-fitting comfort

7. SAFE-TOE Steel Toe

SAFE-TOE steel toe boots are tested to meet or exceed ASTM F2413-11, CAN/CSA Z195-05 Grade 1 and meets electrical hazard requirements for ASTM F2413-11

8. DURAGUARD Metatarsal Guards

DURAGUARD metatarsal guards (item 22206) are built-in “floating” protection so as not to hinder comfort or mobility.

9. Breathe-O-Prene® Insoles

Removable and washable Breathe-O-Prene® insoles provide shock absorption and moisture-wicking protection

10. Outsole Tread

The Servus dipped neoprene boots offer a choice of three outsole tread patterns. All work well to provide a superior grip on smooth, wet floors for better traction and stability.

Look for icons for each Servus boot that correspond to a specific type of protection or industry.

Protection Key

- ST STEEL TOE PROTECTION
- CT COMPOSITE TOE PROTECTION
- MT METATARSAL PROTECTION
- PR PUNCTURE RESISTANT
- EH ELECTRICAL HAZARD RATED OUTSOLE

Industry Key

- CN CONSTRUCTION
- MI MINING
- OG OIL & GAS
- HM HEAVY METAL
- MA MANUFACTURING
- FP FOOD PROCESSING
- FE FARM & EQUESTRIAN
- GP GENERAL PURPOSE

Inside Every Servus Boot

Soft, pliable neoprene rubber and durable, watertight construction to provide all-day-comfort and safety.

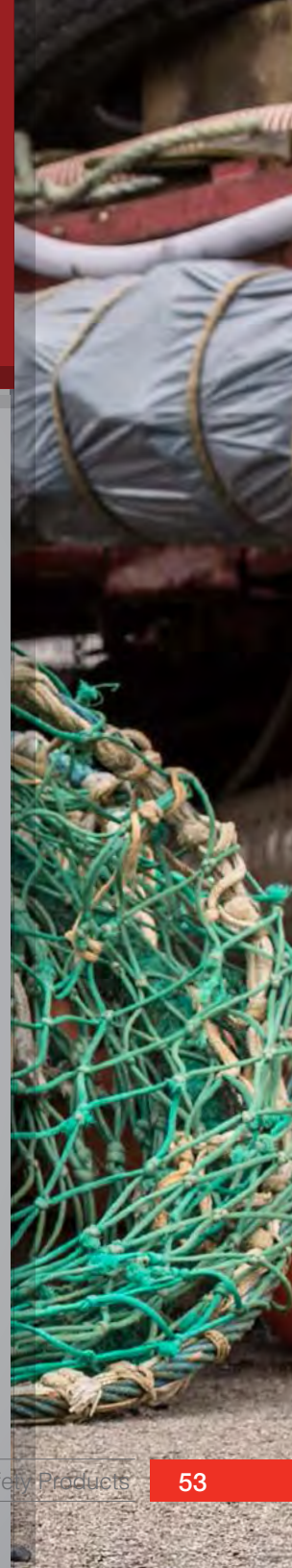

SERVUS
by Honeywell

XTRATUF® Insulated and Non-Insulated Dipped Neoprene Boots

Servus XTRATUF safety footwear is triple dipped for 100% waterproof protection. The Chevron, self-cleaning outsole provides excellent traction on surfaces slick with debris from oil, organic oils and fats.

- 100% waterproof seamless construction keeps workers feet dry and comfortable
- Unique dipping process makes boots soft and pliable for less leg fatigue
- Neoprene is highly resistant to many organic and inorganic acids, chemicals and contaminants
- Dipped neoprene work boot outsoles are Electrical Hazard (EH) rated
- Fabric linings are soft and durable
- Removable Breathe-O-Prene insoles provide shock absorption and wicks away moisture to keep workers' feet dry and comfortable

Outsole For All Dipped Neoprene Boots

ST
EH
CN
MI
OG
FP
FE
GP

22271G

Copper / Tan 15 in

- Steel toe impact protection
- Meets ASTM F2413-11 M I/75 C/75 EH
- Men's whole sizes: 5-14

ST
EH
CN
MI
OG
FP
FE
GP

22273G

Copper / Tan, insulated, 15 in

- Steel toe impact protection
- Built-in 1/4" polymeric foam insulates down to -10° F
- Meets ASTM F2413-11 M I/75 C/75 EH
- Men's whole sizes: 3-15

EH
CN
OG
FE
FP
GP

22170G

Copper / Tan 6 in

- Non-safety toe work boot
- Meets ASTM F2413-11 EH
- Men's whole sizes: 3-14

EH
CN
OG
FP
FE
GP

22172G

Copper / Tan 12 in

- Non-safety toe work boot
- Meets ASTM F2413-11 EH
- Men's whole sizes: 5-14

EH
CN
OG
FE
FP
GP

22272G

Copper / Tan 15 in

- Non-safety toe work boot
- Meets ASTM F2413-11 EH
- Men's whole sizes: 3-14

EH
CN
OG
FE
FP
GP

22274G

Copper / Tan, Insulated, 15 in

- Non-safety toe work boot
- Built-in 1/4" polymeric foam insulates down to -10° F
- Meets ASTM F2413-11 EH
- Men's whole sizes: 5-14

SERVUS by Honeywell

Dipped Neoprene Safety Footwear

The engineering and construction of Servus dipped neoprene work boots are highly specialized. Boots begin with hand laid natural rubber to insure flexibility and strength at critical stress points. The boots are then triple-dipped in neoprene to create a seamless, liquid-tight boot. The outsole, foxing and top binding are added and the entire boot is vulcanized to heat-seal the boot together for a 100% seamless waterproof boot.

- 100% waterproof seamless construction keeps workers feet dry and comfortable
- Unique dipping process makes boots soft and pliable for less leg fatigue
- Neoprene is highly resistant to many organic and inorganic acids, chemicals and contaminants
- Dipped neoprene work boot outsoles are Electrical Hazard (EH) rated
- Fabric linings are soft and durable
- Removable Breathe-O-Prene insoles provide shock absorption and wicks away moisture to keep workers' feet dry and comfortable

Neo-Grip™ Outsoles

Neo-Grip design is engineered to act as suction cups to improve slip resistance and provide confidence while walking on wet surfaces. Neo-Grip outsoles are not recommended on surfaces with debris that can build up, clog the tread and cause slipping hazards.

Chevron Outsoles

The Chevron self-cleaning outsole offers a flat, surface-to-surface tread pattern for increased slip resistance on slick surfaces. The open channels squeegee liquids, fats and debris out with each step to help prevent slips and falls.

	EH CN FP FE GP	EH CN FP FE GP
NEO-GRIP OUTSOLE	22249 Men's whole sizes: 6-13	
CHEVRON OUTSOLE	22215 Men's whole sizes: 4-14	22115 Men's whole sizes: 4-14

Copper / Tan 15 in
- Non-safety toe work boot
- Meets ASTM F2413-11 EH

Copper / Tan 12 in
- Non-safety toe work boot
- Meets ASTM F2413-11 EH

	ST EH CN MI OG FP FE GP	ST EH CN MI OG FP FE GP	ST EH CN MI OG FP FE GP
NEO-GRIP OUTSOLE	22248 Men's whole sizes: 6-13	22148 Men's whole sizes: 6-13	22103 Men's whole sizes: 6-13
CHEVRON OUTSOLE	22214 ① Men's whole sizes: 3-15	22114 ② Men's whole sizes: 3-15	22105 ③ Men's whole sizes: 3-15
	Copper / Tan 15 in • Steel toe impact protection • Meets ASTM F2413-11 M I/75 C/75 EH	**Copper / Tan 12 in** • Steel toe impact protection • Meets ASTM F2413-11 M I/75 C/75 EH	**Copper / Tan 6 in** • Steel toe impact protection • Meets ASTM F2413-11 M I/75 C/75 EH

SERVUS by Honeywell

Dipped Neoprene with V-Wave™ Outsoles

The “V” pattern of the V-Wave outsole features a self-cleaning, wide-pattern tread with open side wall channels to allow liquids and debris to be squeegeed out with each step taken. V-Wave offers the best traction for areas with heavy debris often found in agricultural, food processing, petroleum and petrochemical environments.

- 100% waterproof seamless construction keeps workers feet dry and comfortable
- Unique dipping process makes boots soft and pliable for less leg fatigue
- Neoprene is highly resistant to many organic and inorganic acids, chemicals and contaminants
- Dipped neoprene work boot outsoles are Electrical Hazard (EH) rated
- Fabric linings are soft and durable
- Removable Breathe-O-Prene insoles provide shock absorption and wicks away moisture to keep workers’ feet dry and comfortable

ST EH CN MI OG FP FE GP

22234

Copper / Tan 15 in

- Steel toe impact protection
- Gusseted for added comfort and flexibility in the calf
- Meets ASTM F2413-11 M I/75 C/75 EH
- Men’s whole sizes: 3-15

ST EH CN MI OG FP FE GP

22235

Copper / Tan, Insulated, 15 in

- Steel toe impact protection
- Built-in 1/4" polymeric foam insulates down to -10° F
- Gusseted for added comfort and flexibility in the calf
- Meets ASTM F2413-11 M I/75 C/75 EH
- Men’s whole sizes: 3-15

SERVUS by Honeywell

Duraguard Metatarsal Shield

Duraguard floating metatarsal guard provides extra impact protection across the top of the foot. The guard is rigid, with open sides allowing flexibility for greater comfort. Chevron, self-cleaning outsole provides excellent traction on wet surfaces with some debris from oil, organic oils and animal fats.

ST MT EH CN MI OG HM FP FE GP

22206

Copper / Tan 15 in

- Steel toe impact protection
- Duraguard metatarsal protection
- Meets ASTM F2413-11 M I/75 C/75 Mt/75 EH
- Men's whole sizes: 5-15

RANGER
by Honeywell

Ranger Boots has designed industrial safety boots to tackle the toughest working environments, while providing exceptional comfort.

Ranger work boots are built for rugged durability and extreme protection. Several styles are available with features that cater to the individual needs in a variety of hazardous environments. Tough, hard-wearing treads and knurled protective overlays add durability to these tougher than tough boots. Ranger boots feature a variety of protection elements including steel toe, puncture resistant midsoles and full metatarsal protection – Ranger boots are built to last!

Ranger Boot Technology

Each Ranger boot is built with durable and flexible, ozone-resistant rubber that is hand-laid and then vulcanized at a high heat for a 100% water-tight work boot. Heavy track treads allow for sure-footing on the roughest terrain.

1. Ranger Rubber

Ranger rubber is industrial weight for strength, durability and compounded for ozone resistance.

2. Durable Construction

Hand-laid layers of rubber and safety components are combined for optimal comfort and protection. Construction is vulcanized to assure boot is 100% waterproof.

3. High-Abrasion Reinforcement Rubber

Additional layers of high-abrasion reinforcement rubber when the job demands boots with maximum strength and stability.

4. Fabric Linings

Fabric linings are soft and durable.

6. SAFE-STEP Steel Midsole

SAFE-STEP steel midsoled boots meet ASTM F2413-11 and CAN/CSA Z195-05 standards. Midsoles are thin enough to flex and strong enough to protect.

7. Metatarsal Guards

Ranger boots with metatarsal guards are available in two styles. *Flex-Guard* is a built-in, flexible metatarsal guard that floats on top of the foot for increased flexible protection. Ranger's *Turtleback* full metatarsal guard acts as armored foot protection providing the sturdiest of barriers to impact hazards from all sides.

5. SAFE-TOE Steel Toe

SAFE-TOE steel toe boots meet ASTM F2413-11 and CAN/CSA Z195-05 Grade 1.

8. FOOT FORM™

Removable FOOT FORM contour cushion insoles provide proper cushioning and arch support for all-day comfort while fighting foot and leg fatigue; protecting against unnecessary stress and muscle pain. Removable, washable and replaceable.

9. Outsole Tread

A selection of outsole tread patterns designed to provide traction and stability in a variety of indoor and outdoor working conditions.

Look for icons for each Ranger boot that correspond to a specific type of protection or industry.

Protection Key

- ST STEEL TOE PROTECTION
- CT COMPOSITE TOE PROTECTION
- MT METATARSAL PROTECTION
- PR PUNCTURE RESISTANT
- EH ELECTRICAL HAZARD RATED OUTSOLE

Industry Key

- CN CONSTRUCTION
- MI MINING
- OG OIL & GAS
- HM HEAVY METAL
- MA MANUFACTURING
- FP FOOD PROCESSING
- FE FARM & EQUESTRIAN
- GP GENERAL PURPOSE

Inside Every Ranger Boot

Built tough to take on the harshest work environments. Ranger rubber boots can withstand whatever your day may bring.

7 **Metatarsal Guards**

Flex-Guard Metatarsal Guard

Turtleback Metatarsal Guard

1 **Ranger Rubber**

2 **Durable Construction**

3 **High-Abrasion Reinforcement Rubber**

4 **Fabric Linings**

5 **SAFE-TOE Steel Toe**

6 **SAFE-STEP Steel Midsole**

8 **FOOT FORM™**

9 **Outsole Tread**

RANGER by Honeywell

Heavy Duty Rubber Safety Footwear

Hand-layered construction is dipped and heat sealed for 100% waterproof protection. Commercial grade ozone-resistant rubber is formulated to ensure superior performance and long-term use. The Ranger heavy-duty boots feature high-abrasion resistant TracTread™ outsoles for excellent wear and traction on rough-terrain.

- Steel toe impact protection
- Durable rubber formulation resists cracks and is excellent for general industrial work
- Built-in cushion insole for all-day comfort
- Composite shank reinforced construction and arch support
- Comfortable and durable fabric linings allow for ease in sliding footwear on and off

Outsole For R1141, 2114 and 21622

ST EH CN MI OG FP FE

R1141

Safety Shoe, Black/Yellow, 6 in

- Steel toe impact protection
- Easy, 5-eyelet lacing design
- Meets ASTM F2413-11 M I/75 C/75 EH
- Men's whole sizes: 5-14

ST PR CN MI OG FP FE

2144 ①

Safety Boot, Black/Yellow, 16 in

- Steel toe impact protection
- SAFE-STEP puncture-resistant steel midsoles
- Meets ASTM F2413-11 M I/75 C/75 PR
- Men's whole sizes: 6-15

ST PR EH CN MI OG FP FE

21622 ②

Zip Pac, Black/Yellow, 12 in

- Steel toe impact protection
- SAFE-STEP puncture-resistant steel midsoles
- Heavy-duty zipper closure for easy on and off
- Polymeric foam insulation
- Soft, 3/8 in insulating felt midsole
- Meets ASTM F2413-11 M I/75 C/75 PR EH
- Men's whole sizes: 4-13

RANGER
STEEL MIDSOLE
RANGER
STEEL MIDSOLE

RANGER by Honeywell

Heavy Duty Rubber Safety Footwear *Continued*

Hand-layered construction is then dipped and heat sealed for 100% waterproof protection. Commercial grade ozone-resistant rubber is formulated to ensure superior performance and long-term use. The Ranger heavy-duty boots feature high-abrasion resistant TracTread™ outsoles for excellent wear and traction on rough-terrain.

- Steel toe impact protection
- Durable rubber formulation resists cracks and is excellent for general industrial work
- Built-in cushion insole for all-day comfort
- Composite shank reinforced construction and arch support
- Comfortable and durable fabric linings allow for ease in sliding footwear on and off

ST CN FE GP

21607

Engineer Safety Pack, Olive, 12 in

- Steel toe impact protection
- 3 eyelet lace-up top
- Meets ASTM F2413-11 M I/75 C/75
- Men's whole sizes: 6-13

ST EH CN MA FE GP

R6130

Red / Yellow, 12 in

- Steel toe impact protection
- Outsole is Electrical Hazard rated
- Meets ASTM F2413-11 M I/75 C/75 EH
- Men's whole sizes: 6-13

ST
EH
CN
MI
OG
MA
FP
FE

T112 ①

Safety Full Hipper, Black/Yellow, 36 in

- Steel toe impact protection
- Outsole is Electrical Hazard rated
- Adjustable, stay-tight belt strap for a secure fit
- Meets ASTM F2413-11 M I/75 C/75 EH
- Men's whole sizes: 7-15

ST PR EH CN MI OG MA FP FE

2242

Safety Hipper, Black/Yellow, 26 in

- Steel toe impact protection
- Outsole is Electrical Hazard rated
- SAFE-STEP puncture-resistant steel midsoles
- Shovel Guard for added comfort when shoveling
- Adjustable, stay-tight belt strap
- Meets ASTM F2413-11 M I/75 C/75 PR EH
- Men's whole sizes: 6-15

RANGER by Honeywell

Heavy Duty Rubber Safety Footwear with Metatarsal Protection

Premium grade Rubber is formulated to ensure superior performance and long-term use. The The Ranger heavy-duty boots feature high-abrasion resistant outsoles designed for wear resistance and traction in rough terrain.

- 100% waterproof construction
- Steel toe impact protection
- Ozone-resistant rubber remains flexible in cold weather
- Knurled, high-abrasion resistant overlays in high-wear areas increase boot life
- Tough, comfortable fabric linings for easy on and off
- Built-in cushion insole adds an extra comfort layer
- Composite shanks reinforce construction and support the arch

ST MT PR CN MI OG FE

2149

Flex-Gard Safety Pac, Olive / Yellow / Black, 12 in

- Steel toe impact protection
- Flex-Gard metatarsal protection
- SAFE-STEP puncture-resistant, steel midsoles
- 3-eyelet lace-up top
- Heavy TracTread™ outsole
- Meets ASTM F2413-11 M I/75 C/75 Mt/75 PR
- Men's whole sizes: 6-13

ST MT PR CN MI OG FE

2155

Turtleback Safety Pac, Red / Yellow / Black, 12 in

- Steel toe impact protection
- Full anchored metatarsal protection
- SAFE-STEP puncture-resistant, steel midsoles
- Heavy TracTread™ outsole
- Meets ASTM F2413-11 M I/75 C/75 Mt/75 PR
- Men's whole sizes: 6-13

Outsole For Heavy Duty Rubber Safety Footwear with Metatarsal Protection

ST MT PR CN MI OG FE

2169

Flex-Gard Safety Pac, Olive / Yellow / Black, 16 in

- Steel toe impact protection
- Flex-Gard metatarsal protection
- SAFE-STEP puncture-resistant, steel midsoles
- Top strap for a self-adjusting, secure fit
- Heavy TracTread™ outsole
- Meets ASTM F2413-11 M I/75 C/75 Mt/75 PR
- Men's whole sizes: 5-14

ST MT PR CN MI OG FE

R2145

Turtleback Safety Pac, Black/Yellow, 16 in

- Steel toe impact protection
- Full anchored metatarsal protection
- SAFE-STEP puncture-resistant, steel midsoles
- Heavy TracTread™ outsole
- Meets ASTM F2413-11 M I/75 C/75 Mt/75 PR
- Men's whole sizes: 6-14

ST MT CN MI OG FE

9810

Flex-Gard Safety Boot, Red / Black, 16 in

- Steel toe impact protection
- Flex-Gard metatarsal protection
- Polymeric foam insulation for cold work environments
- 5-eyelet lace-up top
- Heavy TracTread™ outsole
- Meets ASTM F2413-11 M I/75 C/75 Mt/75
- Men's whole sizes: 6-15

RANGER by Honeywell

Insulated Pac Boots

Rugged boots to take on cold condition work environments and harsh winter elements. Our leather top Pacs offer the feel, fit and lacing stability of leather footwear with the warmth and protection of rubber boots. These boots are ultra durable with natural rubber bottoms and outsoles providing excellent traction to ensure solid footing in unstable wintery conditions.

- Waterproof rubber bottom
- Rugged leather upper offers protection from the elements
- Insulated work boots ideal for cold weather, construction and refrigeration applications
- Lace-up closure offers a secure fit

CN
OG
FP
FE
GP

A485 ①

Apun, brown oiled-suede leather, 11 in

- Non-safety toe work boot
- ¾ in. removable foam liner with 200 grams Thermolite® insulation
- Comfort rated down to -50° F (-45° C)
- TPR shell with stabilization ring for durability
- Rust proof speed laces
- Molded ClawMax outsole for added traction
- Men's whole sizes: 7-14

ST
CN
FP
FE

A521 ②

Black, 10 in

- Steel toe impact protection
- Comfort rated down to -50° F (-45° C)
- Bar Grip™ outsole tread design
- Meets ASTM F2413-11 M I/75 C/75
- Men's whole sizes: 6-15

ST
CN
FP
FE

A422 ③

Black, 10 in

- Steel toe impact protection
- Comfort rated down to -75° F (-59° C)
- Built-in double-insulating foam for added warmth in cold conditions
- Bar Grip™ outsole tread design
- Meets ASTM F2413-11 M I/75 C/75
- Men's whole sizes: 7-14

ST
CN
MI
OG
FE

6145

Safety Pac, Red / Yellow / Black, 12 in

- Steel toe impact protection
- Full polymeric foam insulation for cold work environments
- 3-eyelet lace-up top
- Meets ASTM F2413-11 M I/75 C/75
- Men's whole sizes: 6-14

ST
CN
MI
OG
FE

6147

Fleece Lined Safety Pac, Red / Yellow / Black, 12 in

- Steel toe impact protection
- Full fleece insulation for cold work environments
- 3-eyelet lace-up top
- TUFF-SCUFF toe abrasion layer
- Meets ASTM F2413-11 M I/75 C/75
- Men's whole sizes: 6-13

RANGER by Honeywell

Heavy Duty Rubber Safety Footwear with Insulation

Premium grade Rubber is formulated to ensure superior performance and long-term use. The Ranger heavy-duty boots feature high-abrasion resistant outsoles designed for wear resistance and traction on rough-terrain. Thermal liners built in to the rugged Ranger footwear offers warmth in cold condition environments.

- 100% waterproof construction
- Ozone-resistant rubber is flexible in cold weather
- Built-in cushion insole adds an extra comfort layer
- Ultra-composite shanks for arch support to help reduce foot and leg fatigue
- Heavy TracTread™ outsoles

RANGER by Honeywell

Rubber Safety Hip Boots and Waders

Premium grade rubber is formulated to ensure superior performance and long-term use. The Ranger heavy-duty boots feature high-abrasion resistant outsoles designed for wear resistance and traction on rough terrain. Thermal liners built in to the rugged Ranger footwear offers warmth in cold condition environments.

- Vulcanized construction is 100% waterproof, workers remain dry for all day comfort
- Specialized compound prevents ozone deterioration for longer service life
- Heavy TracTread™ outsoles are tough and durable and provide good traction
- Adjustable, stay-tight strap for a snug and secure fit
- Durable fabric linings wick away moisture and aid in donning and doffing

CN
FP
FE
GP

11444 ①

Seafarer Black, 31 in

- Non-safety toe hip boot
- Shovel guard shank for extra arch support and durability
- Heavy TracTread™ outsoles
- Heavy-duty pull-on loops
- Men's whole sizes: 6-14

CN
FE
GP

11146 ②

Black, 33 in

- Non-safety toe hip boot
- Shovel guard shank for extra arch support and durability
- Composite shanks reinforce construction and support the arch
- Heavy TracTread™ outsoles
- Heavy-duty pull-on loops
- Men's whole sizes: 5-14

CN
FE
GP

A2300 ③

Bullhead, Forest Green, 32 in

- Non-safety toe hip boot
- Polymeric foam insulation
- Additional 9 mm felt insole for added warmth
- Self-cleaning, cleated outsole offers good traction and easy maintenance
- Men's whole sizes: 4-14

CN
FE
GP

11135 ④

Northerner Olive, 26 in

- Non-safety toe hip boot
- Shovel guard shank for extra arch support and durability
- Heavy TracTread™ outsoles
- Heavy-duty pull-on loops
- Men's whole sizes: 5-14

Outsole For All Rubber Safety Hip Boots and Waders

ST PR EH CN MI FP FE GP

A2071 ①

AVAILABLE SPRING 2015

Wader, Forest Green, Insulated

- Steel toe impact protection
- Steel midsoles for underfoot puncture protection
- Polymeric foam insulation in boots
- 9mm felt insoles built into each foot for added warmth
- Inside chest pocket
- Rustproof suspender buttons
- Steel shanks for added support
- Heavy TracTread™ outsoles
- Meets ASTM F2413-11 M I/75 C/75 PR EH
- Men's whole sizes: 6-14

*Suspenders and belt sold separately

CN MI FE GP

A2600 ②

Cutthroat Chest Wader, Brown

- Non-safety toe waders
- Chest high 3.5 mm neoprene
- Polyurethene knee and seat shield overlays
- 200 gram Thinsulate® insulation
- Polyurethane knee and seat shield overlays
- Permanently attached, convertible, fully adjustable H-strap suspenders – easily convert to a belt
- Men's whole sizes: 7-14

CN FE GP

A2070 ③

Bluecat Wader, Forest Green

- Non-safety toe waders
- Polymeric foam insulation in boots
- Soft cotton lining
- Inside chest pocket
- Rustproof suspender buttons
- Steel shanks for added support
- Heavy TracTread™ outsoles
- Men's whole sizes: 6-14

*Suspenders and belt sold separately

RANGER by Honeywell

Heavy Duty Rubber Footwear

Premium grade Rubber is formulated to ensure superior performance and long-term use. The Ranger heavy-duty boots feature high-abrasion resistant outsoles designed for wear resistance and traction in rough terrain.

- 100% waterproof construction
- Built-in cushion insole for additional comfort
- Steel shank for greater arch support to help reduce foot and leg fatigue
- Ozone-resistant rubber remains flexible in cold weather

CN
FE
GP

A383

Swamp, Black/Red, 16 in

- Non-safety toe work boot
- Beveled Bar Cleated™ outsole
- Shovel shank arch guard for added support
- Men's whole sizes: 5-14

CN FE GP

T111

Irrigation, Black, 17 in

- Non-safety toe work boot
- High abrasion TracTread™ outsole designed for wear resistance and traction
- Shovel shank arch guard for additional support and comfort when digging
- Men's whole sizes: 3-15

CN FE GP

78590

2-Buckle, Marsh Brown, 16 in

- Non-safety toe work boot
- Polymeric foam insulation
- Soft felt midsole for added underfoot warmth
- V-Bar cleat outsole
- Ultra-composite shank
- Men's whole sizes: 7-14

CN
MI
OG
MA
FE
GP

7362

4-Buckle, Black, 10 in

- 100% waterproof
- Men's whole sizes: 8-15

CN
MI
OG
MA
FP
FE
GP

A380

Yellow, 16 in

- Adjustable snug-up side strap for better fit and to keep dust and debris out
- Cross-ribbed outsole for added traction
- Men's whole sizes: 8-16

RANGER by Honeywell

Overboots for Metatarsal Guard Leather Footwear

- Engineered to be oversized to fit over boots with metatarsal protection
- Ozone-resistant rubber resists cracks and fading for added boot life
- Anti-Skid Bar Tread™ outsole for better traction

Strap On Overshoes

- Over-sized design to fit over leather work boots protecting them from harsh environments, increasing the longevity of expensive footwear
- 100% waterproof boot to keep feet dry
- Durable fabric linings for comfort and added ease in taking overshoes on and off
- Rugged ribbed outsoles add traction to keep workers from slipping and falling

RANGER by Honeywell

Dress Overboots

- Over-sized design to fit over leather work boots protecting them from harsh environments, increasing the longevity of expensive footwear
- Premium grade hand-layered rubber compound is vulcanized to prevent seams from leaking, providing a 100% waterproof boot to keep feet dry
- Cross Grip outsoles add traction to keep workers from slipping and falling

CN
FE
GP

T315

Black, 12 in

- Fleece lined for added warmth in cold conditions
- Fully gusseted zipper closure is 100% waterproof
- Men's whole sizes: 8-14

CN
FE
GP

T314

Black, 10 in

- Fully gusseted zipper closure is 100% waterproof
- Net lining for ease in donning and doffing of boots
- Men's whole sizes: 8-15

RANGER by Honeywell

Supersize Overboots

- Oversized styling to fit over bulky leather footwear
- 100& waterproof
- Ozone-resistant rubber resists cracks and fading for added boot life
- Sturdy, long-lasting fasteners
- Flexible hand-laid construction and smooth fabric lining
- Rugged ribbed outsole for extra traction.

CN
FE
GP

T469

Black with red trim, 5 in

- 2-Buckle closure
- Rugged ribbed outsoles for added traction
- Men's whole sizes: 8-16

CN
FE
GP

T369

Black with red trim, 15 in

- 5-Buckle closure
- Rugged ribbed outsoles for added traction
- Men's whole sizes: 8-16

CN
FE
GP

41463

E-Z Fit Work, Black, 4 in

- Slip-on overboot
- Zig Zag Bar cleated outsole for extra traction
- Men's whole sizes: 8-15

KING'S
by Honeywell

KING'S is the global value safety footwear brand that provides affordable, comfortable and durable work boot options suitable for a wide range of working conditions. KING'S boots feature steel toe protection and are tested to meet ASTM standards for impact protection.

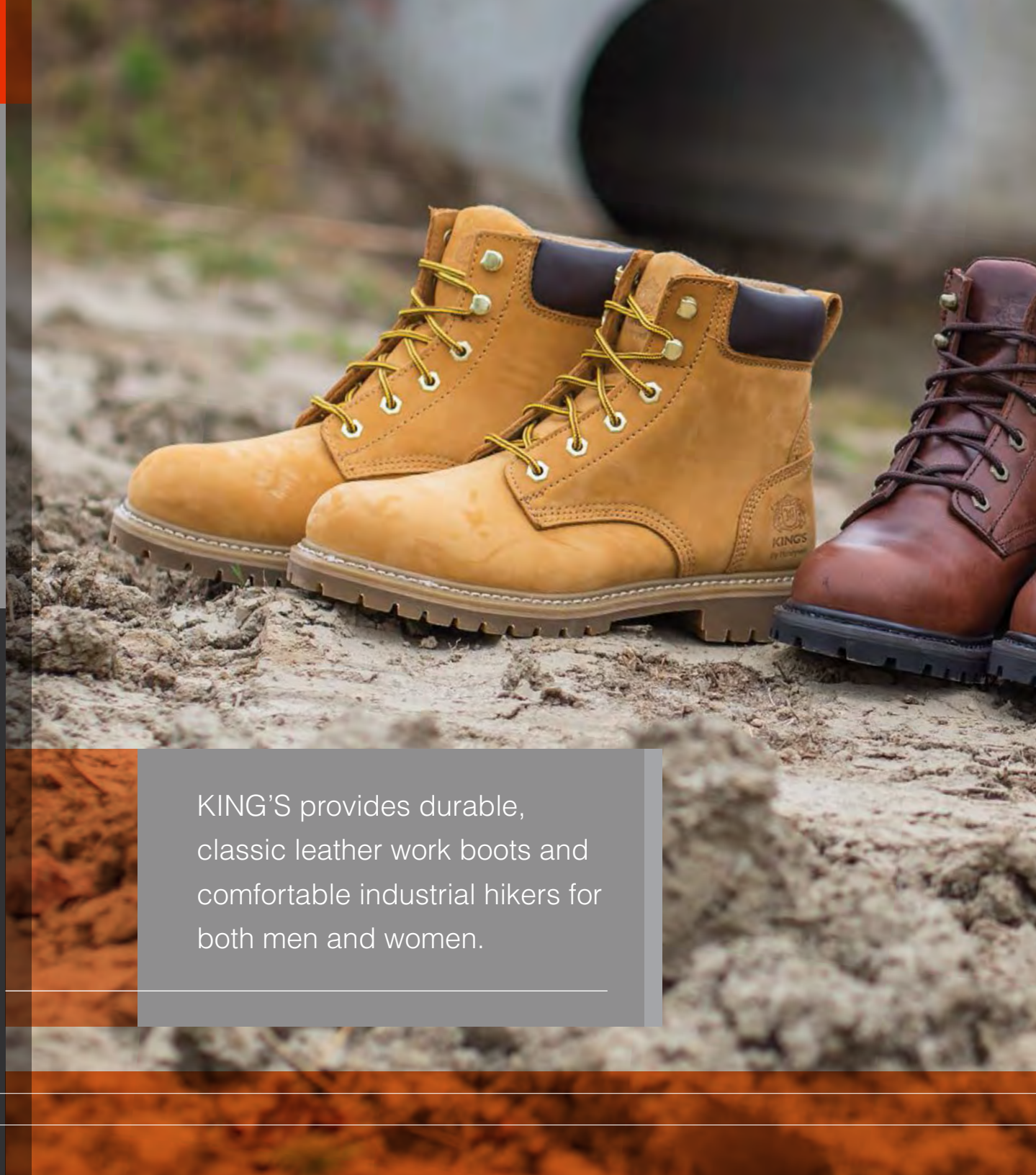

KING'S provides durable, classic leather work boots and comfortable industrial hikers for both men and women.

KING'S Boot Technology

KING'S work boots provides safety, comfort and style at an affordable price. KING'S offers both Men's and Women's work boots and shoes to accommodate a full range of work conditions.

1. Top-Grain Leather Uppers

Top-grain leather uppers are available in oiled or nubuck.

Oiled leather is coated with a raw or blended oil to lubricate the leather to allow it to bend and flex repeatedly without cracking and gives the leather an element of water resistance.

Nubuck leather is grain leather that has been sanded or buffed on the grain side to give a slight nap and a velvet like surface. Nubuck may look like suede, but it offers greater strength and durability due to the top-grain surface. Leather is supple and breaks in easily for greater wearer comfort.

2. Steel Toe Protection

Steel toe provides impact protection, without the bulbous look found in other work boots. KING'S boot construction is sleek and stylish for on and off the job wear-ability.

3. EVA Cushion Insole

EVA cushion insole provides support and comfort, and is removable and replaceable.

4. Welted Construction

Welted construction provides good torsion control on uneven surfaces, which helps to alleviate foot and leg fatigue

5. Lightweight Outsoles

Long lasting outsoles are lightweight and provide excellent comfort and durability.

Look for icons for each KING'S boot that correspond to a specific type of protection or industry.

Protection Key

- ST STEEL TOE PROTECTION
- CT COMPOSITE TOE PROTECTION
- MT METATARSAL PROTECTION
- PR PUNCTURE RESISTANT
- EH ELECTRICAL HAZARD RATED OUTSOLE

Industry Key

- CN CONSTRUCTION
- MI MINING
- OG OIL & GAS
- HM HEAVY METAL
- MA MANUFACTURING
- FP FOOD PROCESSING
- FE FARM & EQUESTRIAN
- GP GENERAL PURPOSE

Inside Every KING'S Boot

Valued priced work boots and shoes to provide protection to allow workers to get the job done. KING'S boots meet ASTM F2413-11 standards.

KING'S
by Honeywell

Classic Leather Work Boots

The KING'S cement constructed boots offer style and safety with classic designs. Cement construction with a welted look offers stability while walking over uneven surfaces, and is durable for a longer boot life.

- Steel toe impact protection
- Outsole is Electrical Hazard rated
- Dual density, removable EVA cushion insole adds support and all day comfort
- Long lasting lugged rubber outsoles are resistant to organic and mineral oils, and provide excellent traction

ST EH CN MA FP FE GP

KCWB03

Brown, lace-up, 6 in

- Oiled, full grain leather
- Meets ASTM F2413-11 M I/75 C/75 EH
- Men's whole sizes: 7-14 / half 7.5 – 11.5

ST EH CN MA FP FE GP

KCWB04

Wheat, lace-up, 6 in

- Soft and flexible nubuck, top-grain leather
- Meets ASTM F2413-11 M I/75 C/75 EH
- Men's whole sizes: 7-14 / half 7.5 – 11.5

KING'S
by Honeywell

Welted Leather Work Boots

Welted leather work boots with a highly durable construction that provides longer wear than other traditional boot construction. Welted construction offers better torsion control for increased stability while walking on uneven surfaces. The quality full grain oiled leather wears well and provides a stylish look and feel.

- Steel toe impact protection
- Durable PU outsole is resistant to organic and mineral oils and provides excellent slip resistance
- Dual density, removable EVA cushion insole adds support and all day comfort

ST CN OG MA FP FE GP

KGEO02

Brown, lace-up, 6 in

- Speed lace metal hardware allows for quick and easy donning and doffing
- Meets ASTM F2413-11 M I/75 C/75
- Men's whole sizes: 7-14 / half 7.5 – 11.5

ST CN OG MA FP FE GP

KWRG01

Brown, pull-on Rigger, 10 in

- Easy-grip, pull-on-loops are large for ease in gripping for donning and doffing
- Meets ASTM F2413-11 M I/75 C/75
- Men's whole sizes: 7-14 / half 7.5 – 11.5

KING'S
by Honeywell

Industrial Hikers

Athletic, industrial hikers provide the look and feel of a sneaker. KING'S provides two stylish designs in mid and low height options. Cement construction is durable and provides excellent stability on uneven surfaces.

- Steel toe impact protection
- Outsole is Electrical Hazard rated
- Durable PU outsole is resistant to organic and mineral oils and provides excellent slip resistance
- Dual density, removable EVA cushion insole adds support and all day comfort
- Long lasting lugged rubber outsoles are resistant to organic and mineral oils

ST
EH
CN
MA
FP
GP

KEXT06

Brown, lace-up, 6 in

- Synthetic leather upper provides excellent durability
- Meets ASTM F2413-11 M I/75 C/75 EH
- Men's whole sizes: 7-13 / half 7.5 – 11.5

ST
EH
CN
MA
FP
GP

KEXT07

Black / Gray, lace-up, 4 in

- Top-grain suede leather and mesh upper allows for excellent flexibility
- Meets ASTM F2413-11 M I/75 C/75 EH
- Men's whole sizes: 7-13 / half 7.5 – 11.5

ST
CN
OG
HM
MA
FP
GP

KEWT84

Black, lace-up, 3 in

- Wing tip leather work shoes
- Meets ASTM F2413-11 M I/75 C/75
- Men's whole sizes: 7-13

ST
CN
OG
HM
MA
FP
GP

KEPL04

Black, lace-up, 3 in

- Classically styled work shoes
- Meets ASTM F2413-11 M I/75 C/75
- Men's whole sizes: 7-13

KING'S
by Honeywell

Executive Series

KING'S Executive Series footwear offers safety and style.

- Steel toe impact protection
- Direct attach construction
- Dual density, removable EVA cushion insole adds support and all day comfort
- Long lasting lugged rubber outsoles are resistant to organic and mineral oils

KING'S
by Honeywell

Women's Leather Work Boots

The KING's line of footwear has expanded to include women's styles; not men's boots sized to women's feet, but actual work boots and hikers that are made to be proportional to a woman's foot.

- Welted construction that provides better forefoot torsion control and increased stability
- Removable leather kiltie and coordinated pops of color add to the feminine style of the boots
- Wide toe box for greater comfort when walking or flexing
- Mesh sock liner to wick away moisture and reduce heat build-up
- Comfort fit, internal heel cup is molded to help prevent heel slippage
- Padded collar for greater comfort around the ankle
- Removable, high-density EVA footbed helps to wick away moisture and provides comfort and support
- Rubber outsole, with a deep track tread is slip resistant to help prevent worker slips and falls

ST
EH
CN
OG
MA
FE
GP

KWLK01

Cream/Blue, lace-up, 6" (152 mm)

- Steel toe impact protection
- Electrical hazard rated outsole
- Meets ASTM F2413-11 F I/75 C/75 EH
- Women's sizes: 5-12 / 5.5-11.5

AVAILABLE SPRING 2015

ST
EH
CN
OG
MA
FE
GP

KWLK02

Gray/Pink, lace-up, 6" (152 mm)

- Steel toe impact protection
- Electrical hazard rated outsole
- Meets ASTM F2413-11 F I/75 C/75 EH
- Women's sizes: 5-12 / 5.5-11.5

AVAILABLE SPRING 2015

KINGS
by Honeywell

Women’s Industrial Hikers

- Suede leather upper with mesh cutouts for greater ventilation and climate control
- Feminine styling features color coordinated hardware, stitching and linings
- Webbed lace ghillie supports through forefoot for a secure fit and feel
- Rubber toe and heel guards protect against scrapes and scratches
- Removable, high-density EVA footbed helps to wick away moisture and provides comfort and support
- Color coordinated loops at the heel and tongue to pull on hikers with ease
- Rubber outsole, with a deep track tread is slip resistant to help prevent worker slips and falls

ST
EH
CN
MA
FE
GP

KWHL01

Black/Radiant Orchid, lace-up, 3" (76.2 mm)

- Steel toe impact protection
- Electrical hazard rated outsole
- Meets ASTM F2413-11 F I/75 C/75 EH
- Women’s sizes: 5-12 / 5.5-11.5

AVAILABLE SPRING 2015

ST
EH
CN
MA
FE
GP

KWHM02

Black/Light Blue, lace-up, 4" (101.6 mm)

- Steel toe impact protection
- Electrical hazard rated outsole
- Meets ASTM F2413-11 F I/75 C/75 EH
- Women’s sizes: 5-12 / 5.5-11.5

AVAILABLE SPRING 2015

KING'S
by Honeywell

Dipped Neoprene

The KING'S dipped neoprene line of safety footwear provides 100% waterproof protection with good chemical resistance at a value price. The seamless, dipped construction is soft and pliable and the top line design features a scalloped edge to help prevent rubbing and chafing on legs. The KING'S dipped neoprene boots are excellent for use in industries such as food processing, and packaging, agri-chemical industries, farming and waste disposable. Excellent boot to be used for plant visitors or inspections.

- KING'S dipped neoprene features a V-Wave outsole, the open edges and wave design effectively squeegees liquid and debris out from underfoot
- Outsoles provide excellent slip resistance in wet or oily environments
- Tough, comfortable fabric lining wicks away moisture and aid in pulling boots on and off with ease

ST EH CN MA FP FE GP

KDNEO01

Black, 12 in

- Steel toe impact protection
- Electrical hazard rated outsole
- Meets ASTM F2413-11 M I/75 C/75 EH
- Men's whole sizes: 7-14

AVAILABLE SPRING 2015

EH CN MA FP FE GP

KDNEO02

Black, 12 in

- Non-safety toe work boot
- Electrical hazard rated outsole
- Meets ASTM F2413-11 EH
- Men's whole sizes: 7-14

AVAILABLE SPRING 2015

NEOS are extremely lightweight and easy to get on and off. With different heights, insulation and traction to offer the right amount of protection, NEOS has you covered.

NEOS® Overshoes protect your expensive work boots while adding traction and insulation in extreme weather conditions. The precision sole design of NEOS overshoes eliminates excess material, making them lighter than competitor overshoes. Our available traction designs allow workers to walk confidently on most surfaces. NEOS remains an industry leader, developing new and relevant products for the industrial market to optimize safe-stepping when walking or working in snowy and icy conditions.

Protection Key

- ST STEEL TOE PROTECTION
- CT COMPOSITE TOE PROTECTION
- MT METATARSAL PROTECTION
- PR PUNCTURE RESISTANT
- EH ELECTRICAL HAZARD RATED OUTSOLE

Industry Key

- CN CONSTRUCTION
- MI MINING
- OG OIL & GAS
- HM HEAVY METAL
- MA MANUFACTURING
- FP FOOD PROCESSING
- FE FARM & EQUESTRIAN
- GP GENERAL PURPOSE

NEOS OVERSHOE®

Slip Resistant Overboots

NEOS STABIL*icers* outsoles with 32 replaceable cleats embedded in the sole to help maintain traction in the harshest winter conditions. Rugged but lightweight outsoles provide excellent slip resistance on ice and snow.

- Durable uppers are waterproof and windproof
- 2.5 mm polyurethane internal bootie
- STABILicers® outsoles, with 32 replaceable cleats per pair, provide excellent traction on ice and snow. NOT to be used on hard surfaces
- Cleat wrench included with convenient internal pocket to keep wrench handy and available to change cleats on the job
- Adjustable hook and loop strap system for a secure and comfortable fit
- Lightweight design to help prevent foot and leg fatigue
- Excellent traction for slip resistance
- Compact for convenient storage
- Optional 10 mm removable EVA insole adds comfort (sold separately, see page 100)

Outsole for N5P3S, ExSG, and VNS1

Outsole for VNS1HEEL

CN MI OG FE GP

VNS1

Voyager™ Black, 11 in

- 500 denier nylon upper
- STABIL*icers*® outsole
- Sizes: XS-2XL

CN MI OG FE GP

N5P3S

Navigator 5™ Insulated, Gray, 15 in ①

- 840 woven polyester upper
- STABIL*icers*® outsole
- 4mm polyurethane foam insulation for additional warmth
- Expandable gator, increases boot height to 20 in
- Sizes: XS-3XL

CN MI OG FE GP

EXSG

Explorer™ Insulated, Black, 11 in ②

- 500 denier nylon upper
- STABIL*icers*® outsole
- 4mm polyurethane foam insulation for additional warmth
- Sizes: XS-3XL

CN MI OG FE GP

VNS1HEEL

Voyager™ with Heel, Black, 11 in ③

- 500 denier nylon upper
- STABIL*icers*® outsole
- Sizes: XS-2XL

Slip-Resistant Overboots Size Conversions

Sizes	XS	S	M	L	XL	2XL	3XL
Fits Men’s Sizes	3-4.5	5-6.5	7-8.5	9-10.5	11-12.5	13-14.5	15-16.5
Fits Women's Sizes	4.5-6	6.5-8	8.5-10	10.5-12			
Insole Dimensions (inches)	10.3x4	11x4.3	11.8x4.4	12.4x4.5	12.8x4.6	13.5x4.8	14.5x5.5

NEOS OVERSHOE®

Winter Overboots

NEOS insulated overboots feature a durable, waterproof construction and a layer of foam insulation to keep feet warm and dry. Rugged but lightweight outsoles provide good slip resistance on ice and snow.

- Durable uppers are waterproof and windproof
- 4mm polyurethane foam insulation
- Adjustable hook and loop strap system for a secure and comfortable fit
- Lightweight design to help prevent foot and leg fatigue
- Excellent traction for slip resistance
- Compact for convenient storage
- Optional 10 mm removable EVA insole adds comfort (sold separately)

CN
MI
OG
FE
GP

N5P3 ①

Navigator 5™ Gray, 15 in

- 840 woven polyester upper
- Vibram® Ninja™ outsole with deep tread for rugged terrain
- Expandable gator, increases boot height to 20 in
- Sizes: XS-2XL

CN
MI
OG
FE
GP

EXPG ②

Explorer™ Black, 11 in

- 500 denier nylon upper
- Perma outsole
- Snow shoe compatible heel
- Sizes: XS-3XL

Winter Overboots Size Conversions

Sizes	XS	S	M	L	XL	2XL	3XL
Fits Men’s Sizes	3-4.5	5-6.5	7-8.5	9-10.5	11-12.5	13-14.5	15-16.5
Fits Women's Sizes	4.5-6	6.5-8	8.5-10	10.5-12			
Insole Dimensions (inches)	10.3x4	11x4.3	11.8x4.4	12.4x4.5	12.8x4.6	13.5x4.8	14.5x5.5

All Season Overboots

Well designed protection and innovative sole designs that deliver outstanding traction indoors and out. All NEOS overboots feature an extra wide opening gusset to easily slide on and off over work boots and shoes.

- Nylon uppers and waterproof membrane provide waterproof and windproof protection
- Hook and loop closure system
- Adjustable hook and loop strap system for a secure and comfortable fit
- Lightweight design to help prevent foot and leg fatigue
- Excellent traction for slip resistance
- Compact for convenient storage
- Optional 10 mm removable EVA insole adds comfort (sold separately)

CN
OG
FE
GP

VIS1

Villager, Black, 11 in

- 160 denier nylon upper
- Superlite outsole
- Sizes: XS-2XL

CN
OG
FE
GP

VNN1

Voyager™ Black, 10 in

- 500 denier nylon upper
- Perma outsole
- Snow shoe compatible heel
- Sizes: XS-3XL

CN OG FE GP

ANN1

Adventurer™ Black, 15 in

- 500 denier nylon upper
- Perma outsole
- Snow shoe compatible heel
- Sizes: XS-2XL

All Season Overboots Size Conversions

Sizes	XS	S	M	L	XL	2XL	3XL
Fits Men's Sizes	3.5-5	5.5-7	7.5-9	9.5-11	11.5-13	13.5-15	15.5-17
Fits Women's Sizes	5-6.5	7-8.5	9-10.5	11-12.5			
Insole Dimensions (inches)	10.3x4	11x4.3	11.8x4.4	12.4x4.5	12.8x4.6	13.5x4.8	14.5x5.5

All Season Overboots

Continued

Well designed protection and innovative sole designs that deliver outstanding traction indoors and out. All NEOS overboots feature an extra wide opening gusset to easily slide on and off over work boots and shoes.

- Nylon uppers and waterproof membrane provide waterproof and windproof protection
- Hook and loop closure system
- Adjustable hook and loop strap system for a secure and comfortable fit
- Lightweight design to help prevent foot and leg fatigue
- Excellent traction for slip resistance
- Compact for convenient storage
- Optional 10 mm removable EVA insole adds comfort (sold separately)

CN FE GP

TRS7

Trekker, Mushroom, 20 in

- 160 denier nylon upper
- Superlite outsole
- Sizes: XS-XXL

CN FE GP

RTK8

River Trekker™ Brown, 31 in

- Tough 900 denier nylon upper is snag and brush-resistant
- Vibram Ninja™ deep tread outsole
- Sizes: M-2XL

SERVUS by Honeywell

Processing Overboots

- Heavy-duty .8 mm thermal polyurethane upper is easily sanitized and is 100% waterproof to keep workers feet dry
- Polyurethane outsole and open tread design are lightweight to prevent foot and leg fatigue
- Unique strap system provides a secure fit to prevent boot from slipping and causing a trip hazard
- Wide, easily opened gusset provide ease in putting on or taking off overshoes

ST CN OG FP FE GP

IT12ST17

Blue/White 12 in

- Steel toe impact protection
- Sizes: XS - 3XL

CN OG FP FE GP

IT12PT17

Blue/White 12 in

- Non-safety toe work boot
- Sizes: XS - 3XL

20000

Ranger Chest Wader Suspenders

- Packaged individually, see-thru hanging pac

23000

Ranger Chest Wader Belt

- Dark brown, wide banded ballistic nylon strapping
- Adjustable sizing
- One-hand, quick-release buckle
- Packaged individually, see-thru hanging pac

25002

Aquaseal® Boot Repair

- Repairs neoprene, rubber and coated fabric boots
- Permanently seals and repairs leaks with a waterproof bond
- Dries clear
- Packaged individually, hanging blister pac

EVA

EVAInsoles

- Removable 10mm EVA insoles offer additional insulation
- Easily removed for cleaning
- Packaged 90 pairs/case, bag
- Available in sizes: XS – 2XL

27001

Foot Form Insoles

- Extra layer of stabilizing support and comfort
- Lightweight insoles are contour formed to the foot with lift at the arch and support at the heel
- Moisture wicking
- Packaged 200 pairs / case, bag
- Available in Men's whole sizes: 3-15

27002

Shock-Absorbing Insoles, Black, 16 in

- Lightweight, quick-drying top fabric
- Reduced compression set for increased life by reducing foam compaction
- Enhanced shock absorption
- Improved air flow to reduce drying time
- Built-in heel cup and arch support for enhanced comfort
- Packaged 200 pairs / case, bag
- Available in Men's whole sizes: 3-15

28000

Pile Boot Liner, Tan, 16 in

- Fits most non-insulated knee boots
- Provide a deep pile fleece lining for added comfort and warmth in colder weather
- Packaged 25 pairs / case, bag
- Available in Men's whole sizes: S (6 - 7), M (8 - 9), L (10 -11), XL (12 - 13), XXL (14 - 15)

A417

Thermolite® Liners, Black, 15 in

- Extra thick, extra warm 3/4" foam insulating liners replace worn liners in most fabric or leather-top pacs
- Thermolite® liners are removable and washable
- Packaged 12 pairs / case, bag
- Available in Men's whole sizes: 6-14

28500

Bama Sokket

- Removable, insulating boot liners combine acrylic fiber with cotton tricot to wick away perspiration and insulate against the cold
- Wear one size larger boot when wearing Bama Sokkets
- Packaged 30 pairs / case, bag
- Available in Men's whole sizes: 5-15

29000

Puncture-Resistant Midsole

- Flexible steel inserts for puncture protection underfoot
- Cushion-covered for greater comfort
- Use as an insole or midsole
- Packaged ??
- Available in Men's whole sizes: 5-14

SRC

STABILicer® Replacement Cleats

- 32 cleats per package
- Long-wearing, case-hardened steel cleats allow easy replacement of worn or clogged cleats
- Can be quickly changed with the NEOS cleat wrench
- Package of 32 cleats / pack

28114

3/8 in Felt Insole, Black

- Perfect footbed for waterproof boots
- Provides thick cushioning that allows air and moisture to ventilate freely
- Insulates foot from cold ground
- Takes the shape of each foot with wear for custom support
- Comes in wide widths that can be trimmed down for narrow boots
- Removable and washable
- Packaged 100 pairs / case, bag
- Available in Men's whole sizes: 3-15

SR201

SERVUS STUDS Replacement Kit

- Easily replaces worn studs in style SR101
- Includes tough tungsten carbide studs and stud extractor tool
- Package of 12 studs / bag

SR101

SERVUS STUDS®

- Traction accessory for work shoes and boots
- Servus Studs work as second sole with tungsten carbide studs that bite into the ice
- Replaceable tungsten carbide studs are fixed in each stretch outsole cover
- Compact and store easily in a pocket or work belt until needed
- Pliable in cold weather
- Ideal for or work and play in the snow and ice
- Packaged 50 pairs / case, bag
- Available in sizes: S – 2XL

Chemical Resistance Comparison

This Chemical Resistance Comparison chart is based on theoretical information available in literature about the chemical resistance of individual elastomers. It is provided as a general guide for qualified professionals who recommend, select, specify or otherwise determine the suitability of products for worker safety. As such, the Chemical Resistance Comparison chart is advisory only and addresses the relative resistance of rubber, neoprene, PVC and TPU to degradation by the listed chemicals.

This chart does not address resistance to permeation. Permeation resistance of a particular elastomer cannot be inferred based on the chemical resistance information provided in this chart. The suitability of a product for a specific application must be determined and tested by the purchaser. HSP/ Norcross Safety Products L.L.C. assumes no responsibility for the suitability of an end user's product selection for a specific application.

	Rubber	Neoprene	PVC	TPU
Acetaldehyde	F	F	P	E
Acetic Acid	E	F	P	G
Acetone	F	P	P	G
Acrylonitrile	F	P	P	G
Ammonia Anhydrous	E	E	P	G
Ammonium Hydroxide	G	E	G	G
Ammonium Sulphate	E	E	G	P
Amyl Acetate	F	P	P	E
Amyl Alcohol (Fusel Oil)	E	E	E	G
Animal Fats	P	G	G	E
Aniline	F	P	P	P
Battery Acid	P	F	G	E
Benzaldehyde	F	P	P	E
Benzene (Benzol)	P	P	P	G
Benzol (Benzene)	P	P	P	G
Benzyl Alcohol	P	G	E	F
Benzyl Chloride	P	P	P	P
Butane	F	G	F	E
Butter	P	G	E	E
Buttermilk	P	E	G	E
Butyraldehyde	P	F	P	G
Butyl Acetate	P	P	P	F
Butyl Alcohol	E	E	G	E
Calcium Chloride	E	E	E	G
Calcium Hypochlorite	P	F	E	F
Carbolic Acid	P	P	F	P
Carbon Disulfide	P	P	P	P
Carbon Tetrachloride	P	G	P	P
Carbonic Acid	E	E	E	E
Castor Oil	E	E	E	G
Caustic Potash	G	E	G	G
Caustic Soda	E	E	E	G
Chlorine Water	F	F	F	G
Chloroacetone	F	F	P	G

	Rubber	Neoprene	PVC	TPU
Chloroform	P	P	P	P
Chlorothene	P	P	P	F
Chlorox	P	G	G	G
Citric Acid	E	E	E	G
Coal Tar Solvents	P	P	G	G
Coconut Oil	P	E	F	E
Copper Chloride	G	G	E	G
Copper Sulphate	G	E	E	G
Cottonseed Oil	P	E	G	E
Cutting Oil	P	G	P	G
Cyclohexane	P	P	P	G
Cyclohexanone	P	P	P	G
Diacetone Alcohol	G	G	P	G
Dibenzyl Ether	P	P	P	F
Dibutyl Phthalate	P	P	P	F
Dictylphthalate	P	G	P	G
Diesel Fuel	P	G	F	E
Diethanolamine	G	G	G	E
Diisobutylene	P	P	P	F
Ethyl Acetate	P	P	P	F
Ethyl Alcohol	E	E	G	E
Ethylene Glycol	E	E	E	E
Ethyl Ether	P	P	P	E
Ethyl Formate	P	P	P	E
Ferric Chloride	E	E	E	P
Formaldehyde	G	G	G	G
Formic Acid	G	E	G	G
Furfural	P	G	F	G
Fusel Oil (Amyl Alcohol)	E	E	E	G
Gasoline (Cracked)	P	F	F	E
Gasoline (SR)	P	G	F	E
Glycerine	E	E	E	E
Grease (Petroleum Based)	P	F	E	E
Hexane	P	G	F	G

	Rubber	Neoprene	PVC	TPU
HydraulicFluids (Petroleum Base)	P	G	E	E
Hydraulic Fluids (Phosphate Ester)	P	P	P	P
Hydraulic Fluids (Silicate Ester)	P	E	P	F
Hydraulic Fluids (Water Glycol)	G	F	P	G
Hydrobromic Acid	E	F	E	G
Hydrochloric Acid	E	G	E	G
Hydrofluoric Acid	P	F	E	G
Hydrofluoric Acid (Hot)	P	P	G	F
Hydrogen Peroxide	F	P	G	G
Hydrogen Sulfide	F	E	E	F
Hylene (Toulene Diisocyante)	P	P	P	E
Isoprophyl Alcohol	E	E	E	E
Kerosene (Coal Tar)	P	F	G	G
Kerosene (Pet.)	P	P	P	F
Lactic Acid	G	E	G	E
Lard Oil	P	G	G	E
Linseed Oil	P	E	P	E
Malic Acid	E	E	E	G
Methyl Acetate	P	F	P	G
Methyl Alcohol	E	E	G	E
Methyl Cellosolve	P	G	E	G
Methyl Chloride	P	P	P	G
Methyl Ethyl Ketone	P	P	P	G
Milk	E	P	E	E
Mineral Oil	P	E	E	E
Monoethanolamine	G	G	G	P
Morpholine	P	P	F	G
Naphtha	P	P	F	G
Nitric Acid	F	P	P	G
Nitrobenzene	P	P	P	P
Octyl Alcohol	G	G	P	G
Oleic Acid	P	F	G	G
Olive Oil	P	G	F	E
Paint Remover	P	P	P	G

	Rubber	Neoprene	PVC	TPU
Perchlorethylene	P	P	P	G
Perchloric Acid	P	G	P	P
Petroleum Oils	P	G	G	E
Petroleum Solvent	P	G	G	E
Phosphoric Acid 20%	F	F	F	G
Pine Oil	P	P	F	G
Potassium Dichromate	G	E	G	E
Potassium Hydroxide	G	E	G	G
Potassium Permaganate	E	E	G	G
Propane	P	G	E	G
Propyl Acetate	P	P	P	F
Propyl Alcohol	E	E	E	E
Silicone Oil 220	G	E	G	E
Skydrol #500	P	P	P	F
Soaps	G	G	G	E
Sodium Chloride	E	E	G	G
Sodium Hydroxide	E	E	E	G
Stearic Acid	F	G	E	E
Sulfuric Acid	F	F	G	E
Tannic Acid	E	E	E	G
Tide	P	G	G	G
Tin Chloride	G	G	G	P
Toluene	P	P	P	G
Toluol	P	P	P	G
Trichlorethylene	P	P	P	P
Tricresyl Phosphate	F	F	P	P
Triethanolamine	G	G	G	F
Trinitrotoluene (TNT)	P	G	G	F
Tung Oil	P	E	F	E
Turpentine	P	G	G	G
Water	E	E	E	E
Water 100C	E	E	E	E
Xylol	P	P	P	F

E – Excellent G – Good F – Fair P – Poor

With NSP Triple Density Technology®, it is possible to mold three compounds in one boot. Normally, two compounds are used to make the parts of the outsole both durable and slip resistant in specific organic or inorganic substances. The third compound is used to mold job-specific boot uppers for use in harsh environments such as slaughterhouses, agri-industrial fertilizers and chemicals, petrochemicals, dairy and poultry processing, commercial fishing and processing, breweries, and other specific applications. Note the recommended job applications for Triple Density Footwear throughout this catalog. In these applications, the footwear ratings will be even better than the ratings for ordinary PVC as shown in this Chemical Resistance Chart.

Index

OLIVER by Honeywell

65392 10
65394 10
65396 10
65690 12
65691 12
65698 12
55231 14
55232 14
55246 14
45633C..... 16
45637C..... 16
45646C..... 17
45675C..... 17
45680C..... 17
42637 18
42646 18
OL10001..... 19
OL10002..... 19
OL11111..... 20
OL11112..... 20
OL21111..... 21
OL21112..... 21
OL22001..... 22
OL23001..... 22
22205 23
25299 24

CPCS-INFT 30
CPCT-000..... 30
CSCT-000..... 30
ACP-STL0 32
ASP-STL 32
CHH-000A..... 33
CHM-000A 33
CHS-META..... 34
CMS-000A 34
CHS-000A..... 34

SERVUS by Honeywell

75105 40
75102 40
75101 40
75108 42
75121 42
75109 42
75119 42
75145C..... 44
75122 45
75126 45
75120 45
73104 46
73505 46
18805 46
74928 46
18801 47
18802 47
18803 47
18822 48
18821 48
18837 48
18835 48
18839 48
11003 50
11004B..... 50
11001 50
11002B..... 50
11095 50
11993 51
11993B..... 51
11924 51
11924B..... 51
11994 51
11926 51
22271G..... 54
22273G..... 54
22170G..... 54
22172G..... 55
22272G..... 55
22274G..... 55
22249 56
22215 56
22115 56
22248 57
22214 57
22148 57
22114 57
22103 57
22105 57
22234 58
22235 58
22206 59

RANGER by Honeywell

R1141..... 64
2144 64
21622 64
21607 66
R6130..... 66
T112 67
2242 67
2149 68
2155 68
2169 69
R2145..... 69
9810 69
A485 70
A521 70
A422 70
6145 71
6147 71
11444 72
11146 72
A2300..... 72
11135 72
A2071 73
A2600..... 73
A2070..... 73
A383 74
T111 74
78590 74
7362 75
A380 75
T315 76
T314 76
T469 77
T369 77
41463 77

KING'S by Honeywell

KCWB03 82
KCWB04 82
KGEO02 83
KWRG01 83
KEXT06 84
KEXT07 84
KEWT84 85
KEPL04 85
KWLK01 86
KWLK02 86
KWHL01 87
KWHM02..... 87
KDNEO01..... 88
KDNEO02..... 88

NEOS OVERSHOE

VNS1 92
N5P3S..... 92
EXSG..... 92
VNS1HEEL..... 92
N5P3S..... 94
EXPG..... 94
VIS1..... 96
VNN1..... 96
ANN1..... 97
TRS7..... 98
RTK8..... 98
IT12ST17..... 99
IT12PT17..... 99
20000 100
23000 100
25002 100
27001 100
27002 100
28000 100
28114 101
28500 101
29000 101
A417..... 101
EVA..... 101
SR101..... 101
SR201..... 101
SRC..... 101

U.S. Tel : 800.430.4110
Fax: 800.572.6346

Canada Tel: 888.212.7233
Fax: 888.667.8477

Honeywell Safety Products
900 Douglas Pike
Smithfield, RI 02917
www.honeywellsafety.com

© 2015 Honeywell International Inc.
All rights reserved.

Honeywell