COMPACT AIR PAPR REPLACEMENT PARTS
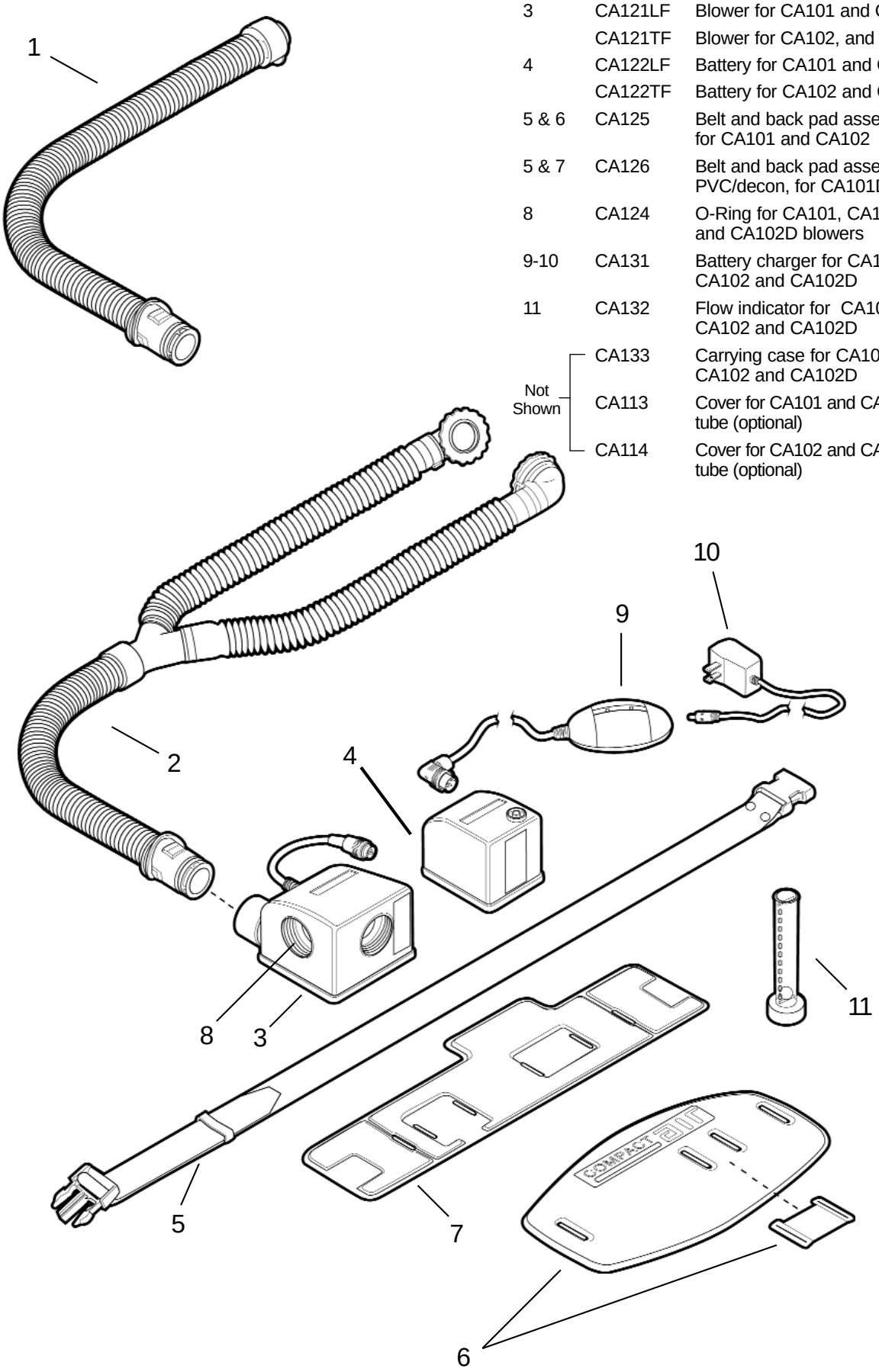
	Prod. #	Description
1	CA127	Breathing Tube for CA101 and CA101D
2	CA129	Breathing Tube for CA102 and CA102D
3	CA121LF	Blower for CA101 and CA101D
	CA121TF	Blower for CA102, and CA102D
4	CA122LF	Battery for CA101 and CA101D
	CA122TF	Battery for CA102 and CA102D
5 & 6	CA125	Belt and back pad assembly, standard, for CA101 and CA102
5 & 7	CA126	Belt and back pad assembly, PVC/decon, for CA101D and CA102D
8	CA124	O-Ring for CA101, CA101D, CA102 and CA102D blowers
9-10	CA131	Battery charger for CA101, CA101D, CA102 and CA102D
11	CA132	Flow indicator for CA101, CA101D, CA102 and CA102D
Not Shown	CA133	Carrying case for CA101, CA101D, CA102 and CA102D
	CA113	Cover for CA101 and CA101D breathing tube (optional)
	CA114	Cover for CA102 and CA102D breathing tube (optional)