Technical Specifications

Söll Ho-Ver turntable

Reference:

- 28134

Material:

- Stainless steel (316, 316L, 316Ti), pickled
- Screw connections made of galvanized steel

Features:

- For safe transfer from vertical to horizontal and vice versa
- Turned part: profile 50x30 mm, material thickness 4 mm
- To be used in combination with aluminium, steel or stainless steel guide rails
- Left version
- Special curved version according to customer requirements
- For rail radius 570 mm

Dimensions:

- See drawing on the right and
- Drawing No. 7100445

Net weight: 4.0 kg
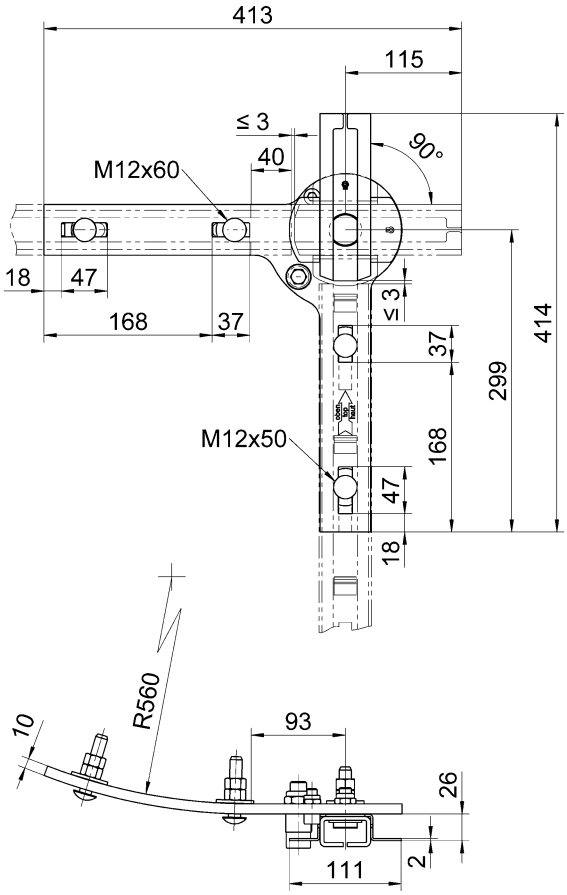
Application example: