I-Class™ Mark II

Thermal Transfer Installation

1

2

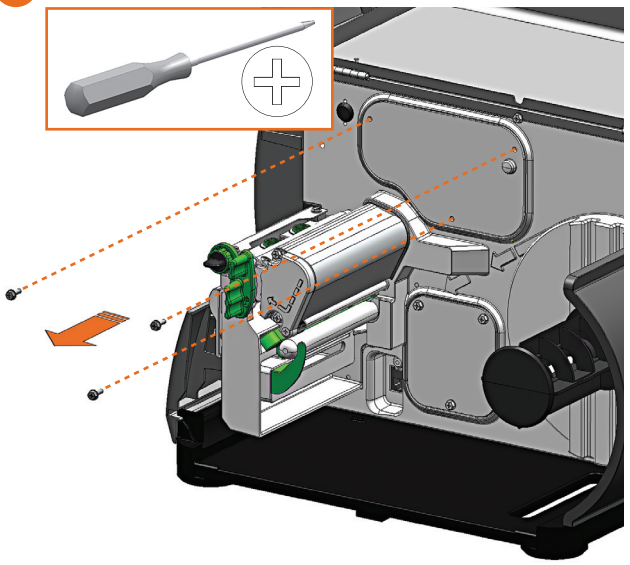

3

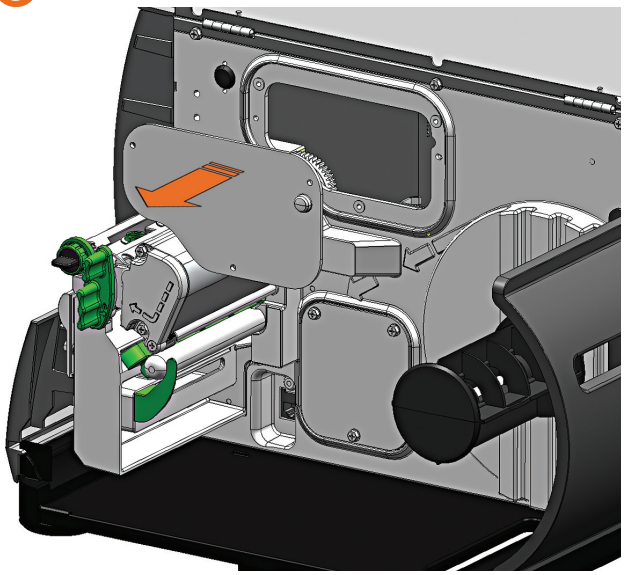

4

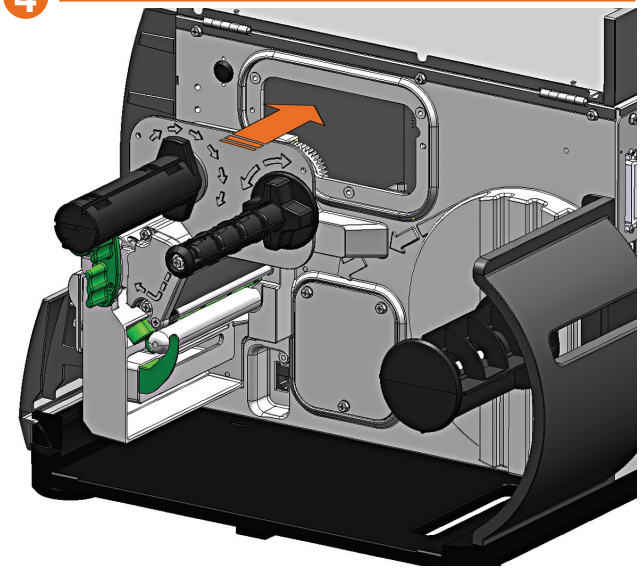

5

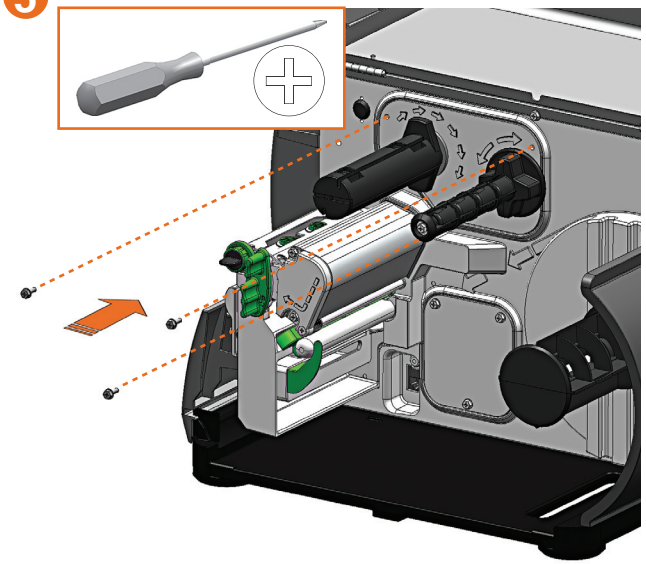

6