PM43c

Airline Extended Tray Instructions

航空公司扩展托盘说明
航空伸縮托架說明
Instructions pour le plateau de billetterie étendu
Verlängerte Flugscheinablage – Anleitung
Istruzioni per vassoio esteso per linea aerea
항공 확장 트레이 지침
Instruções de Bandeja Estendida de Companhia Aérea
Инструкции к расширенному лотку для авиабилетов
Instrucciones para bandeja extendida para aerolínea

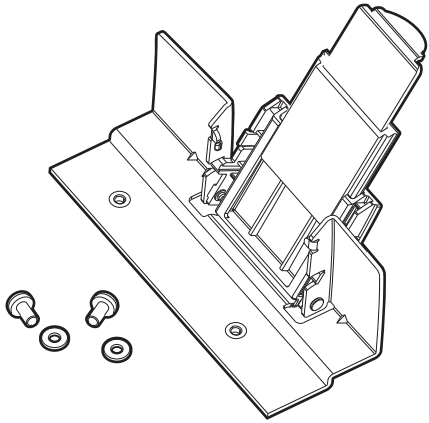

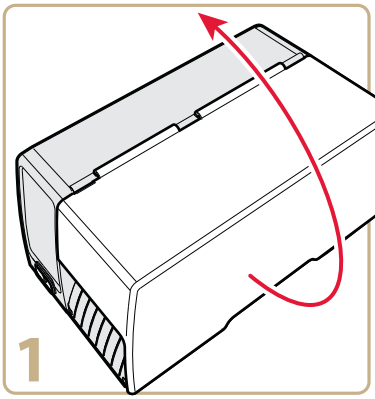

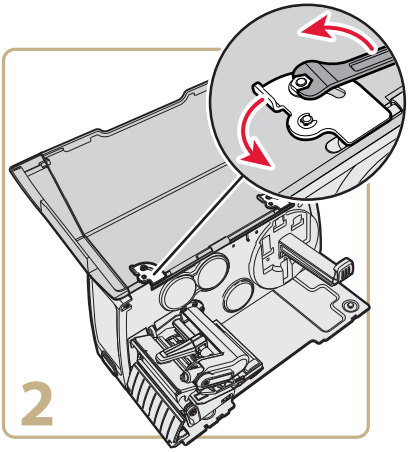

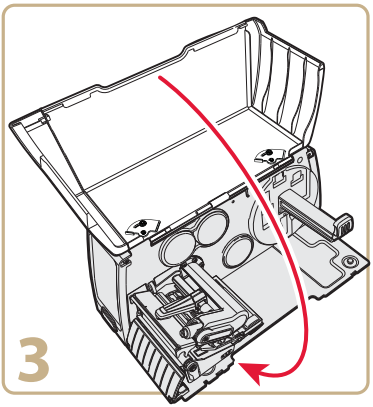
3

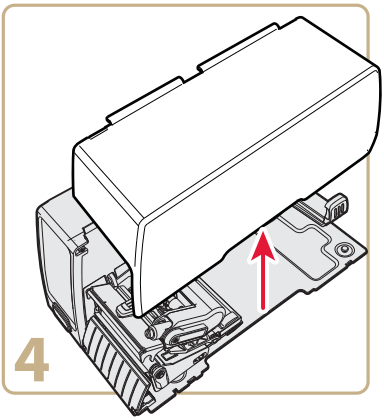
4

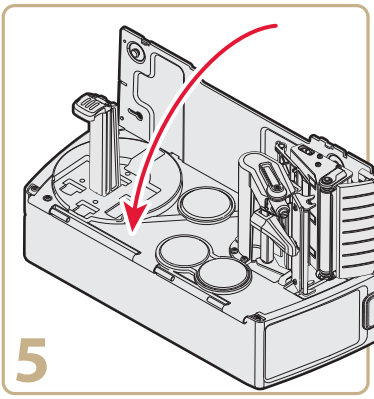
5

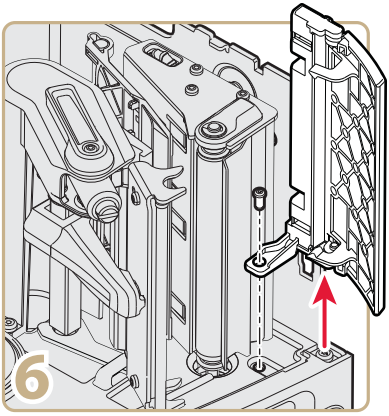
6

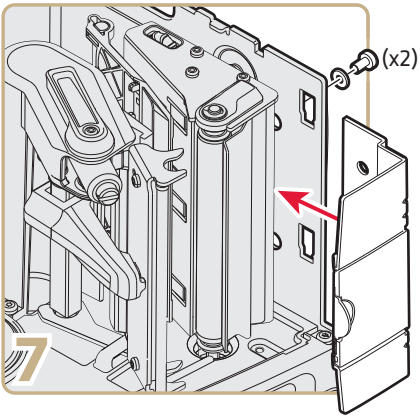
(x2)
7

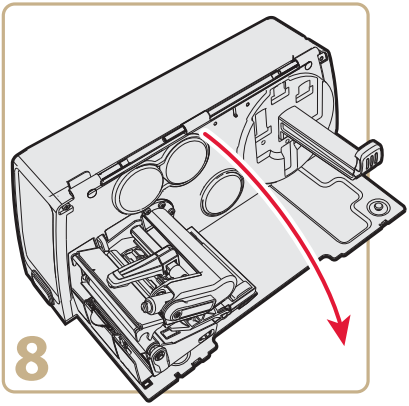
8

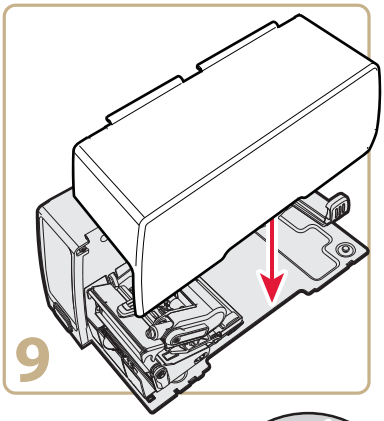
9

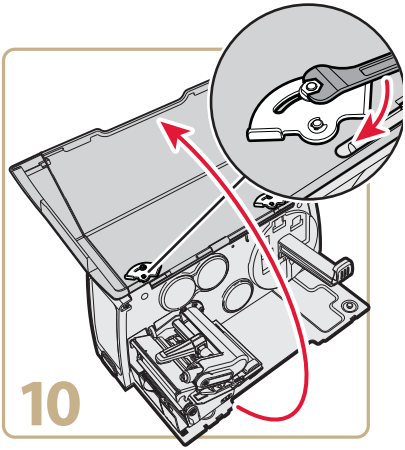
10

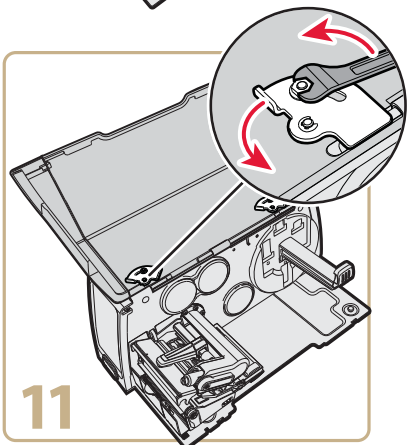
11

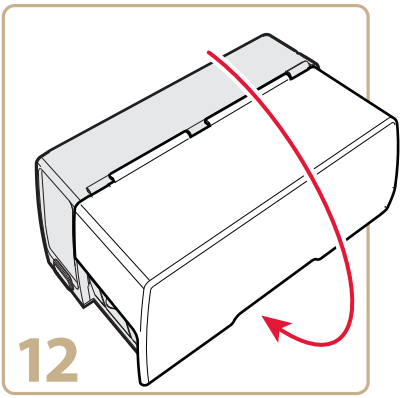
12

Worldwide Headquarters
6001 36th Avenue West
Everett, Washington 98203
U.S.A.

tel 425.348.2600

fax 425.355.9551

www.intermec.com

© 2012 Intermec Technologies Corporation. All rights reserved.

PM43c Airline Extended Tray Instructions

P/N 943-360-001