Honeywell

Model TS

Transducer Simulator
User's Guide

Sensotec Sensors

Honeywell
Sensotec Sensors
2080 Arlingate Lane
Columbus, OH 43228, USA
Telephone: (614)850-5000 • Fax: (614) 850-1111 • Toll Free: 1-800-848-6564
E-mail: service@sensotec.com
http://www.honeywell.com/sensotec

Transducer Simulator User's Guide
Model TS
Document Number: 008-0626-00
Rev. A: May, 2004

⚠ WARNING
PERSONAL INJURY
DO NOT USE these products as safety or emergency stop devices, or in any other application where failure of the product could result in personal injury.
Failure to comply with these instructions could result in death or serious injury.

Table of Contents

1 Introduction 5
1.1 Overview 5
1.2 Specifications 6
1.3 External Arrangement 8
1.4 Internal Arrangement 10
2 Wiring 11
2.1 Overview 11
2.2 Examples 13
3 Calibration 15
3.1 Calibration Interval 15
3.2 Equipment Needed 15
3.3 Calibration Procedure 16
4 Operation 19
5 Warranty 21

1 Introduction

1.1 Overview

The Model TS Transducer Simulator is an accurate, easy-to-use instrument which simulates the mV/V output of unamplified strain-gage transducers. It greatly assists in the troubleshooting, testing and calibration of systems which use pressure transducers or load cells.

Features include:

- Precision, wire-wound resistors
- Input resistance selection of 350 Ohm or 5000 Ohm
- Rugged, weatherproof aluminum case
- Optional NIST calibration certificate
- No batteries or other power supply required

1.2 Specifications

Input Requirements:	3 Vdc to 12 Vdc (do not use AC voltage)
Output Ranges:	0.5 mV/V, 1 mV/V, 2 mV/V, 5 mV/V and 10 mV/V (each in 10% steps)
Output Resistance:	350 Ohm or 500 Ohm (field selectable)
Output Linearity and Hysteresis:	±0.01% of full scale typical ±0.025% of full scale max.
Connections:	Binding posts for use with wire or banana jacks
Case size:	178 mm x 127 mm x 127 mm [7.0 in x 5.0 in x 5.0 in]
Case material:	Aluminum
Output Zero Balance:	350 Ohm resistance: field trimmable 5000 Ohm resistance: 0.01% F.S. max.

Weight:	1.1 kg [2.5 lb]
Temperature, storage:	-30 °C to 65 °C [-20 °F to 150 °F]
Temperature, operating:	5 °C to 40 °C [40 °F to 105 °F]

1.3 External Arrangement

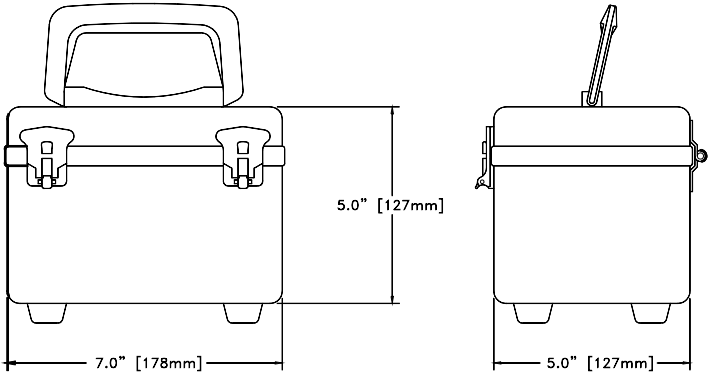

Figure 1-1: Outline Dimensions

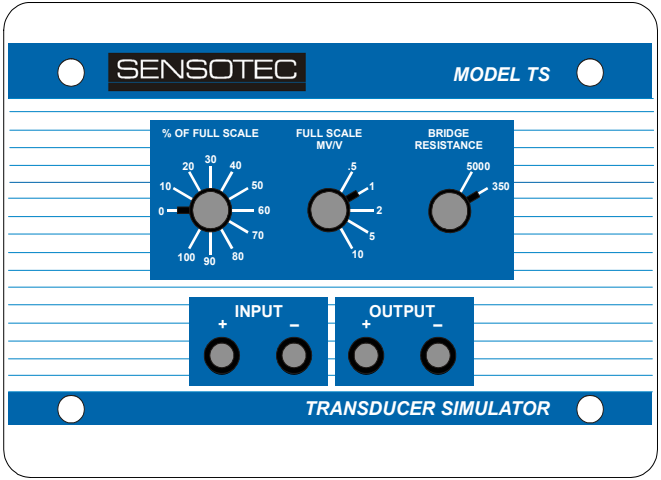

Figure 1-2: Front Panel Layout

1.4 Internal Arrangement

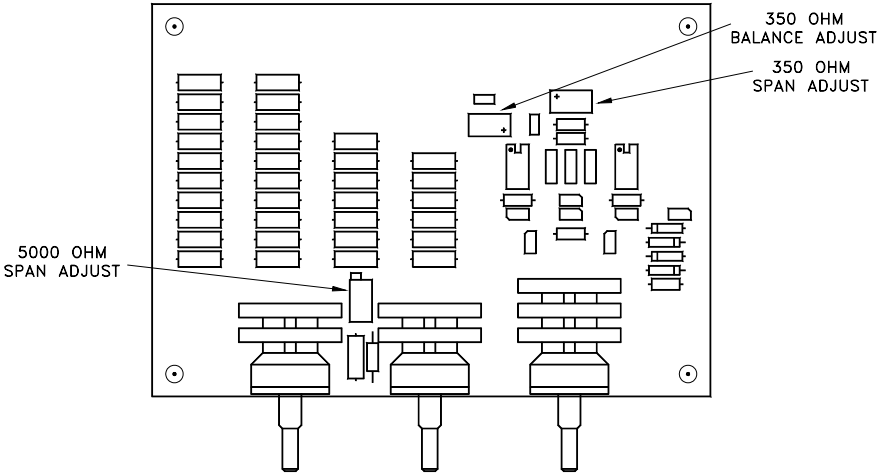

Figure 1-3: Internal Arrangement

2 Wiring

2.1 Overview

When simulating a strain-gage pressure transducer or load cell, replace the transducer in your measuring system with the transducer simulator by wiring as indicated below.

Transducer Terminal	Model TS Terminal
(+)Excitation	(+)Input
(-)Excitation	(-)Input
(+)Output	(+)Output
(-)Output	(-)Output

If the measuring instrument in your system uses excitation sensing, connect the instrument's (+)Sense terminal to the transducer simulator's (+)Input terminal, and the instrument's (-)Sense terminal to the transducer simulator's (-)Input terminal.

CAUTION
Only use DC excitation voltages with the transducer simulator. The transducer simulator is not designed for use in systems using an AC excitation voltage.
Failure to comply with these instructions may result in product damage.

2.2 Examples

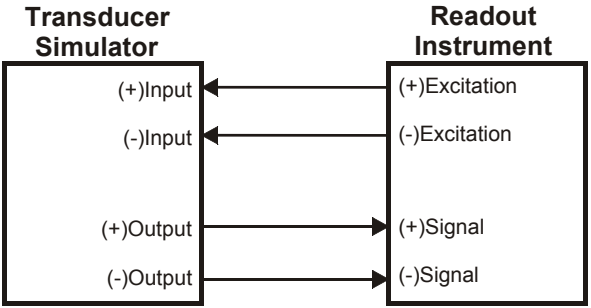

Figure 2-1: Typical Wring to Readout Instrument

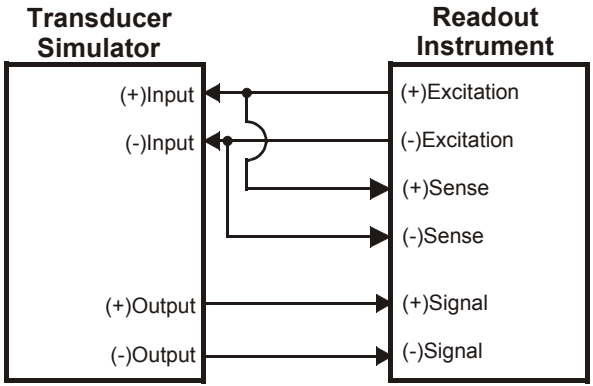

Figure 2-2: Wiring to Readout Instrument w/Excitation Sense Wires

3 Calibration

3.1 Calibration Interval

The transducer simulator is calibrated at the factory and generally requires no further adjustments. The following calibration procedure, however, can be used to adjust the span of the 350 Ohm and 5000 Ohm bridge outputs.

3.2 Equipment Needed

- High-accuracy voltmeter with a “voltage ratio” measurement function, such as the Hewlett-Packard/Agilent 34401A multimeter
- Low-noise power supply with a 5 Vdc or 10 Vdc output. Since the mV/V measurements will be made with ratiometrically with the voltmeter, the 5 Vdc or 10 Vdc power supply output does not have to be precise.

3.3 Calibration Procedure

1. Loosen the four captive screws on the front panel. Remove the front panel/circuit board assembly from the enclosure.
2. Wire the voltmeter to the transducer simulator according to Figure 2-2:"Wiring to Readout Instrument w/Excitation Sense Wires" on page 14. All connecting wires should be of a similar length. Connect the voltmeter's "ratio reference sense" terminals to the transducer simulator directly at the (+)Input and (-)Input terminals.
3. Turn the power supply on. Allow 5 minutes warm-up.

5000 Ohm Full-Scale Calibration

4. Enable the voltmeter's "voltage ratio" mode.
5. Set the transducer simulator as follows:
   "% OF FULL SCALE"=100,
   "FULL SCALE mV/V" = 10,
   "BRIDGE RESISTANCE"=5000.

6. Locate the “5000 Ohm Span Adjust” potentiometer on the circuit board (see Figure 1-3:“Internal Arrangement” on page 10). Adjust it so that the voltmeter reads as close to 10 mV/V as possible.

350 Ohm Balance Calibration

7. Disable the voltmeter’s “voltage ratio” mode. Change the voltmeter’s display resolution to at least 1µV.

8. Set the transducer simulator as follows:
   “% OF FULL SCALE”=0,
   “FULL SCALE mV/V” = 10,
   “BRIDGE RESISTANCE”=350.

9. Locate the “350 Ohm Balance Adjust” potentiometer on the circuit board (see Figure 1-3:“Internal Arrangement” on page 10). Adjust it so that the voltmeter reads 0 µV to within ±2 µV.

350 Ohm Full Scale Calibration

10. Enable the voltmeter’s “voltage ratio” mode.

11. Set the transducer simulator as follows:
    “% OF FULL SCALE”=100,
    “FULL SCALE mV/V” = 10,
    “BRIDGE RESISTANCE”=350.

12. Locate the “350 Ohm Span Adjust” potentiometer on the circuit board (see Figure 1-3:“Internal Arrangement” on page 10). Adjust it so that the voltmeter reads as close to 10 mV/V as possible.

13. Turn off the power supply.

14. Re-install the front panel assembly back into the enclosure.

This completes the calibration procedure.

4 Operation

For maximum accuracy, allow five minutes warm-up time with the readout instrument powered and connected to the transducer simulator.

5 Warranty

Honeywell warrants goods of its manufacture as being free of defective materials and faulty workmanship. Contact your local sales office for warranty information. If warranted goods are returned to Honeywell during the period of coverage, Honeywell will repair or replace without charge those items it finds defective. The foregoing is the Buyer's sole remedy and is in lieu of all other warranties, expressed or implied, including those of merchantability and fitness for a particular purpose.

Specifications may change without notice. The information we supply is believed to be accurate and reliable as of this printing. However, we assume no responsibility for its use.

While we provide applications assistance personally, through our literature and the Honeywell web site, it is up to the customer to determine the suitability of the product in the application.

Honeywell

Honeywell Automation and Control Solutions
Sensotec Sensors
2080 Arlingate Lane
Columbus, Ohio 43228-4112
Tel: (614)850-5000
Fax: (614)850-1111
E-mail: service@sensotec.com

http://www.honeywell.com/sensotec

Document Number 008-0626-00 Printed in USA

Copyright 2004 Honeywell International Inc.