D-1308-D

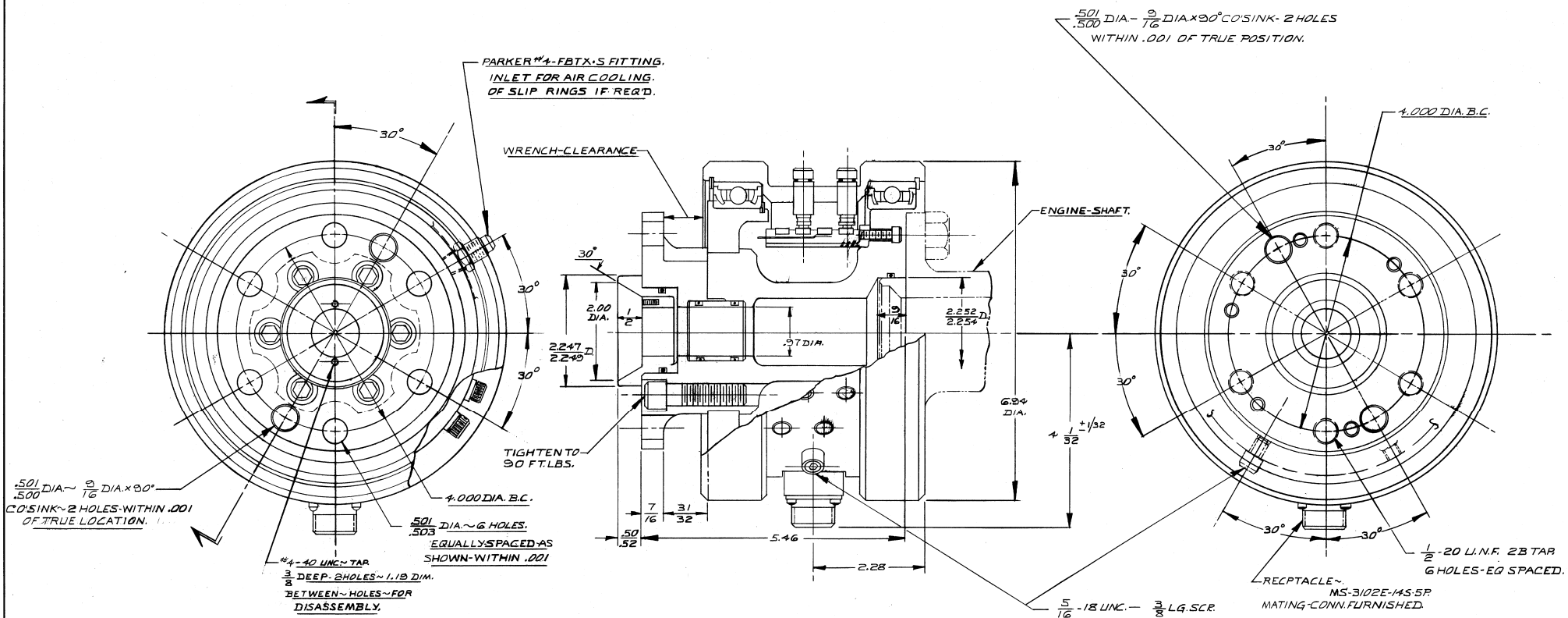

MODEL Nº	FLIGHT-TEST TORQUE-RATING IN-LBS	GROUND-TEST TORQUE-RATING IN-LBS.	OUTPUT @ FLIGHT TEST-TORQUE— — RATING	SHEAR LOAD.	TORSIONAL-STRESS FLIGHT~TEST TORQUE-RATING	ALLOWABLE-BENDING MOMENT-IN-LBS. FLIGHT~TEST.	T/I IN-LB/RAD.	MAX. SPEED R.P.M
1308-10K	10,000	15,000	1.0 MV/V	3,000	12,000	11500	3.54×10^6	3500
1308-13K	13,000	20,000	1.0 MV/V	4,000	12,000	14500	4.10×10^6	3500
1308-16K	16,000	24,000	1.0 MV/V	4,500	12,000	16000	4.43×10^6	3500
1308-20K	20,000	30,000	1.0 MV/V	5,000	12,000	18,000	4.74×10^6	3500

Ⓛ FLIGHT TESTED

DET. No	PART No	DESCRIPTION	REQ'D

OUTSIDE~DIMENSIONS~OF PROP. SHAFT~TORQUE~PICKUP.

SCALE: FULL | DRAWN BY: DICK | REF. DWG: C-12099 | MAT'L:
DATE: 9-13-59 | CHK'D BY: | MODEL: 1308 | JOB NO.

UNLESS OTHERWISE SPECIFIED:
TOLERANCE ON FRACTIONS ± 1/64
TWO PLACE DECIMALS ± .010
THREE PLACE DECIMALS ± .005
ANGLES ± 0°30'
TOLERANCE ON DRILLED HOLES +.007 -.000
REMOVE ALL BURRS & SHARP EDGES
DIMENSION LIMITS HELD AFTER PLATING
SURFACE FINISH 125√

SYM.	REVISION	DATE
L	ADDED "FLIGHT TESTED" DCN 5085 CMR	
K	ECN 2302	8-26-74
J	REDRAWN HBS	7/5/74

LEBOW ASSOCIATES, INC.
TROY, MICHIGAN

DRAWING NO. D-1308-D