INSTALLATION INSTRUCTIONS FOR THE

HALL-EFFECT ROTARY POSITION SENSORS RTY SERIES

50069443
Issue 5

GENERAL INFORMATION

The RTY Series uses a magnetically biased, Hall-effect integrated circuit (IC) to sense rotary movement of the actuator shaft over a set operating range. Rotation of the actuator shaft changes a magnet's position relative to the IC. The resulting flux density change is converted to a linear output.

MOUNTING INFORMATION

Mount the sensor and/or lever using flat washers and screws as shown in Figures 1 and 2.

In harsh applications, treat the screw threads with a suitable thread locking compound.

TABLE 1. SPECIFICATIONS

CHARACTERISTIC	PARAMETER	
	LV (Low Voltage)	HV (High Voltage)
Supply voltage	5 ±0.5 Vdc	10 Vdc to 30 Vdc
Supply current	20 mA max.	32 mA max.
Supply current (during output to ground short)	25 mA max.	47 mA max.
Output: **standard** **inverted**[2]	 0.5 Vdc to 4.5 Vdc ratiometric 4.5 Vdc to 0.5 Vdc ratiometric	 0.5 Vdc to 4.5 Vdc non-ratiometric 4.5 Vdc to 0.5 Vdc non-ratiometric
Output signal delay	4 ms typ.	
Overvoltage protection	10 Vdc	-
Reverse polarity protec-tion	-10 Vdc	-30 Vdc
Output to ground short circuit protection	continuous	
Output load resistance (pull down to ground)	10 kOhm typ.	
EMI: **radiated immunity** **conducted immunity**	 100 m/V per ISO11452-2 from 200 MHz to 1000 MHz 100 mA BCI per ISO11452-4 from 1 MHz to 200 MHz	 100 m/V per ISO11452-2 from 200 MHz to 1000 MHz 100 mA BCI per ISO11452-4 from 1 MHz to 400 MHz
EMC	exceeds CE, UKCA requirements	
Operating temp. range	-40 °C to 125 °C [-40 °F to 257 °F]	
Storage temperature range	-40 °C to 125 °C [-40 °F to 257 °F]	
Ingress protection	IP67 according to DIN 40050	
Expected life	35 M cycles	
Media compatibility	heavy transportation fluids	
Housing material	PBT plastic	
Shock[1]	50 G peak	
Vibration[1]	20 G peak tested from 10 Hz to 2000 Hz	
Salt fog	concentration 5% ±1% for 240 hr per SAE M1455 Section 4.3.3.1 (at 5.0 Vdc, 38 °C [100 F °])	
Resolution	12 bit	
Mating connector	AMP Superseal 282087-1	
Mechanical end stop	no	
Approvals	CE, UKCA	

[1] Applies to RTY sensor without lever only.

[2] Removes the requirement for the customer to have to invert the logic associated with the application. This is a convenience for the customer, and in some cases, can simplify the customer's overall solution.

Honeywell

TABLE 2. OUTPUT

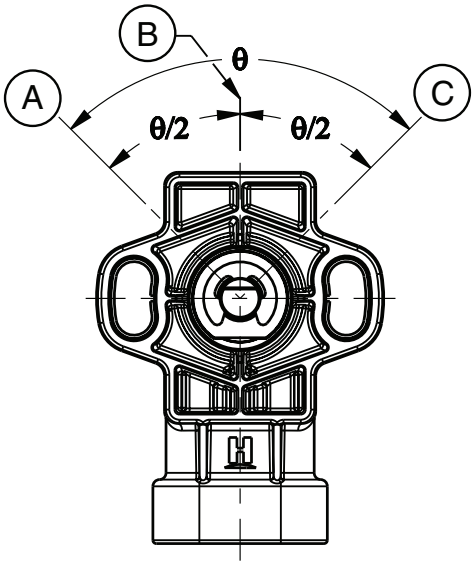

Standard Output	Inverted Output
A = Left output: 0.5 Vdc	A = Left output: 4.5 Vdc
B = Zero reference	B = Zero reference
C = Right output: 4.5 Vdc	C = Right output: 0.5 Vdc

TABLE 3. PINOUT

NORTH AMERICAN	EUROPEAN
Pin 1 = Vcc	Pin 1 = GND
Pin 2 = GND	Pin 2 = Vcc
Pin 3 = Output	Pin 3 = Output

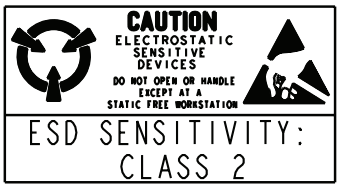

NOTICE
Ferrous material or more than 300 Gauss magnet within a 10 mm [0.39 in] radius of sensor may affect sensor performance.

TABLE 4. FUNCTIONAL CHARACTERISTICS

Sensing Angle	Linearity Error	Accuracy Error	Standard Input	Inverted Input
50° (±25°)			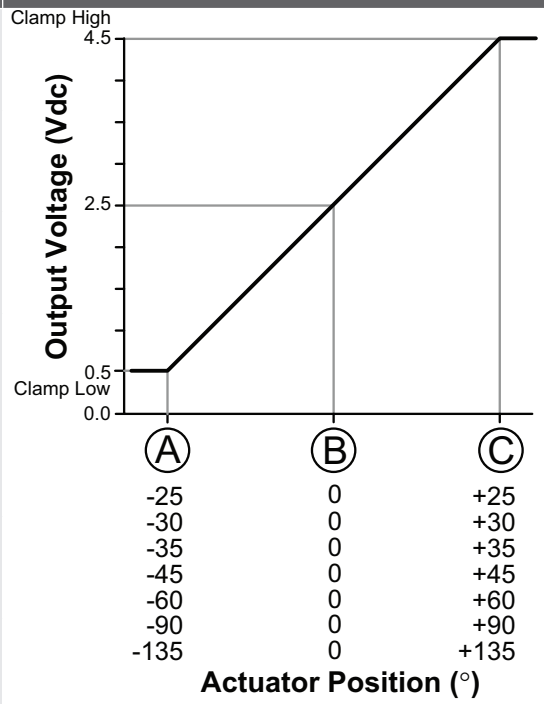	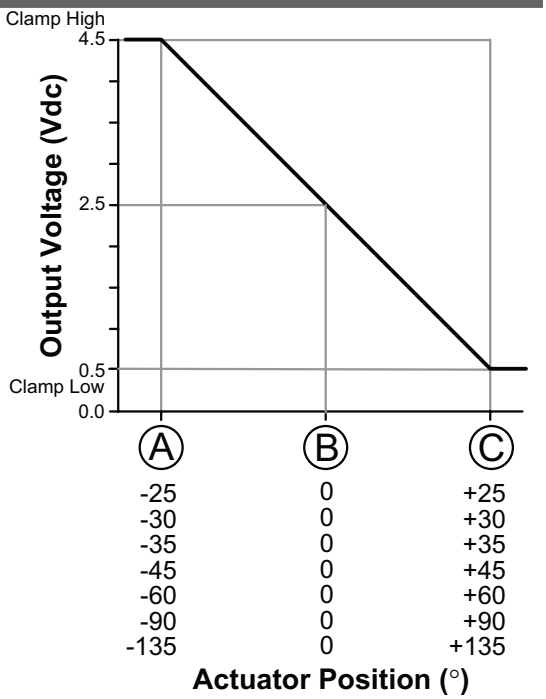
60° (±35°)				
70° (±35°)				
90° (±45°)				
120° (±60°)				
180° (±90°)				
270° (±135°)	±1.0%	±1.6%		
360° (±180°)			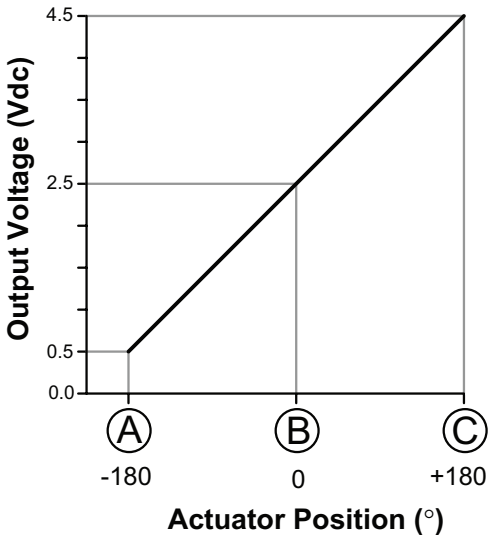	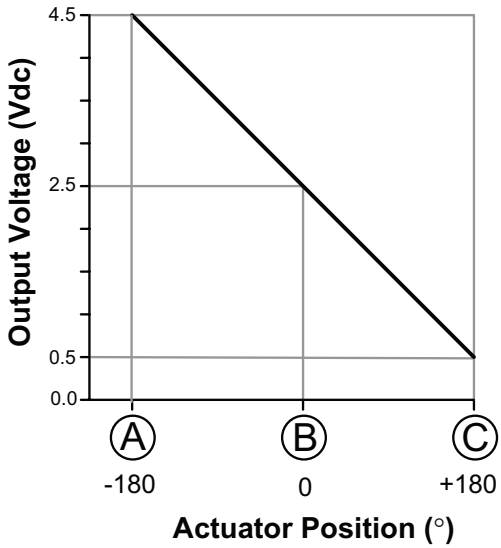

- See table 2 for A, B, C references.
- The linearity error is the deviation of the measured value from the best fit line and is the quotient of the measured output ratio deviation from the best fit line at the measured temperature to the best fit line output ratio span at the measured temperature.
- Accuracy is measured as a deviation from the index line, where the index line is defined as the line with the ideal slope and sensor output voltage corrected at 0° position for its ideal value at 25 °C ±5 °C. Accuracy is valid only when the sensor output is correct at 0° position for its ideal value in the application.

Figure 1. Dimensional Drawings for Sensor with Lever (For reference only: mm [in])

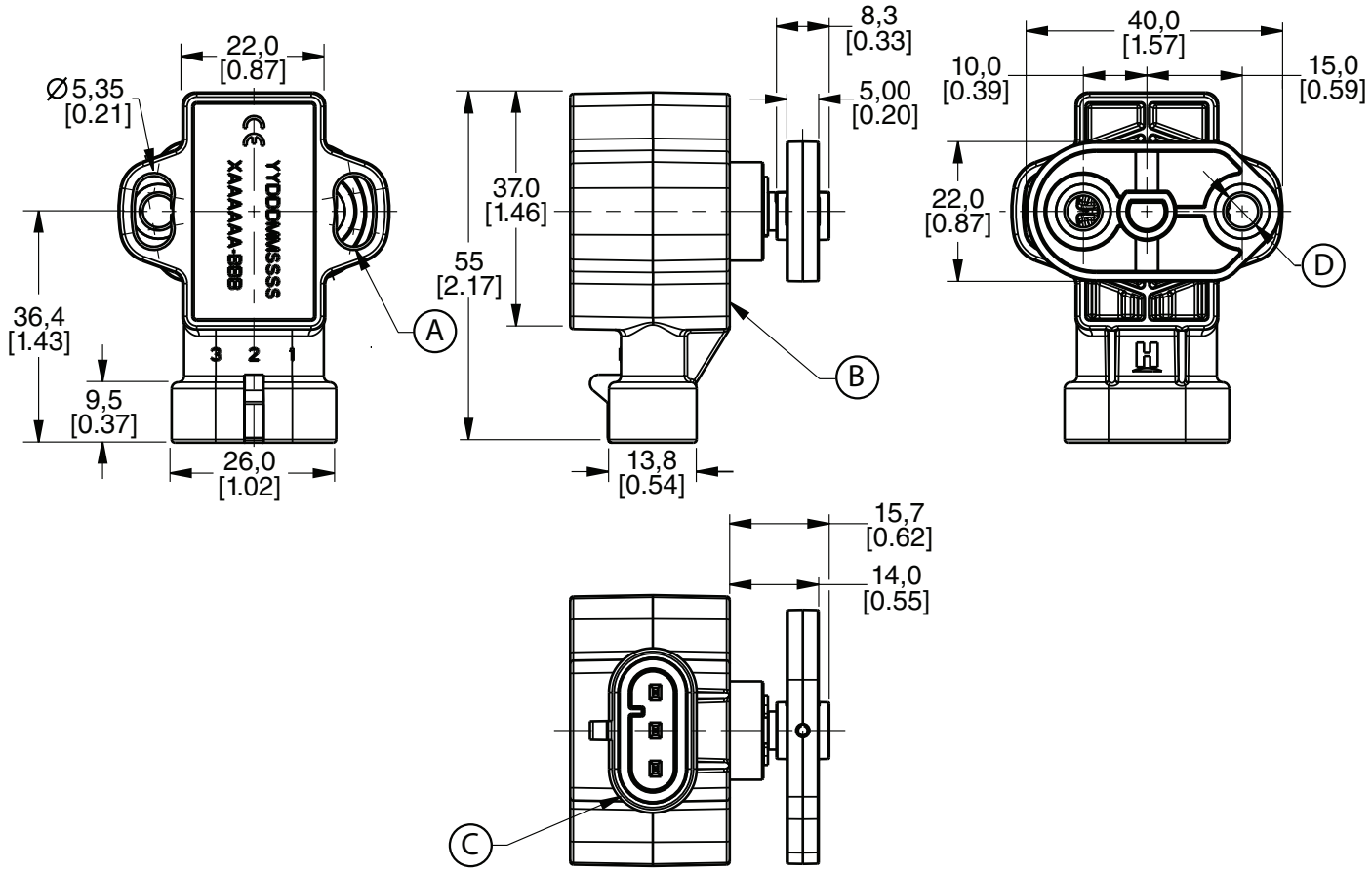

(A) Mount sensor with non-magnetic stainless steel M5 screws. Mounting torque is 2,5 ± 0,5 N m [22.1 ±4.4 in-lb].

(B) Mounting surface.

(C) Mating connector: AMP superseal 282087-1.

(D) Mount lever using M6x1 screws. Mounting torque 8 N m [70.8 in-lb] max.

Figure 2. Dimensional Drawings for Sensor without Lever (For reference only: mm [in])

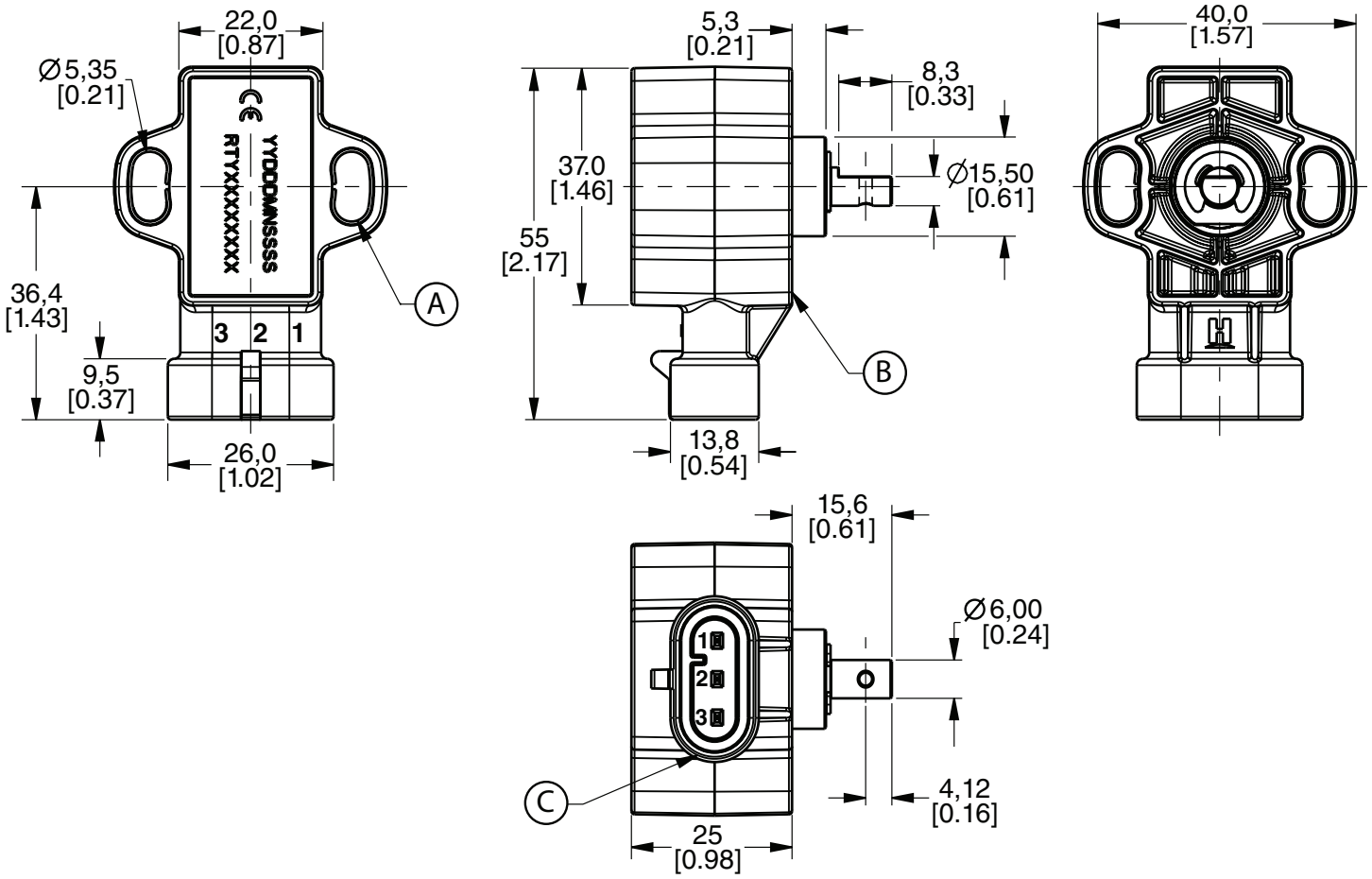

(A) Mount sensor with non-magnetic stainless steel M5 screws. Mounting torque is 2,5 ± 0,5 N m [22.1 ±4.4 in-lb].

(B) Mounting surface.

(C) Mating connector: AMP superseal 282087-1.

⚠ WARNING
PERSONAL INJURY

DO NOT USE these products as safety or emergency stop devices or in any other application where failure of the product could result in personal injury.

Failure to comply with these instructions could result in death or serious injury.

⚠ WARNING
MISUSE OF DOCUMENTATION

- The information presented in this product sheet is for reference only. Do not use this document as a product installation guide.
- Complete installation, operation, and maintenance information is provided in the instructions supplied with each product.

Failure to comply with these instructions could result in death or serious injury.

WARRANTY/REMEDY

Honeywell warrants goods of its manufacture as being free of defective materials and faulty workmanship during the applicable warranty period. Honeywell's standard product warranty applies unless agreed to otherwise by Honeywell in writing; please refer to your order acknowledgment or consult your local sales office for specific warranty details. If warranted goods are returned to Honeywell during the period of coverage, Honeywell will repair or replace, at its option, without charge those items that Honeywell, in its sole discretion, finds defective. **The foregoing is buyer's sole remedy and is in lieu of all other warranties, expressed or implied, including those of merchantability and fitness for a particular purpose. In no event shall Honeywell be liable for consequential, special, or indirect damages.**

While Honeywell may provide application assistance personally, through our literature and the Honeywell web site, it is buyer's sole responsibility to determine the suitability of the product in the application.

Specifications may change without notice. The information we supply is believed to be accurate and reliable as of this writing. However, Honeywell assumes no responsibility for its use.

FOR MORE INFORMATION

Honeywell Advanced Sensing Technologies services its customers through a worldwide network of sales offices and distributors. For application assistance, current specifications, pricing or the nearest Authorized Distributor, visit our website or call:

USA/Canada	+1 302 613 4491
Latin America	+1 305 805 8188
Europe	+44 1344 238258
Japan	+81 (0) 3-6730-7152
Singapore	+65 6355 2828
Greater China	+86 4006396841

Honeywell
Advanced Sensing Technologies
830 East Arapaho Road
Richardson, TX 75081
sps.honeywell.com/ast

50069443-5-EN | 01/22

Honeywell