Product Data Sheet

Product Datasheet

ECO-SURE (2E) Carbon Monoxide Gas Sensor

Document Purpose

The purpose of this document is to present the performance specification of the ECO-SURE (2E) carbon monoxide sensor.

This document should be used in conjunction with the ECO-SURE (2E) Characterisation Note, Operating Principles (OP07) and the Product Safety Datasheet (PSDS 12.1).

The data provided in this document are valid at 20°C, 50% RH and 1013 mBar for 3 months from the date of sensor manufacture. For guidance on sensor performance outside of these limits, please refer to the ECO-SURE (2E) Characterisation Note.

Output signal can drift below the lower limit over time. For guidance on the safe use of the sensor, please refer to the Operating Principles OP07.

ECO-SURE (2E)

Carbon Monoxide (CO) Gas Sensor
Part Number: 2112B3000

Product Data Sheet

Features:

- Long Life
- Stable Performance
- UL Certified - UL2075

Applications:

- Residential
- Fire Detection
- Ventilation Control

Technical Specifications

MEASUREMENT

Operating Principle	2-electrode electrochemical
Measurement Range	0-500 ppm CO
Maximum Overload	1000 ppm CO
Sensitivity	45 ± 15 nA/ppm
Sensitivity Banding	A : 30.0 - 35.9 nA/ppm
	B : 36.0 - 42.9 nA/ppm
	C : 43.0 - 50.9 nA/ppm
	D : 51.0 - 60.0 nA/ppm
Response Time (T90)	<30 seconds
Baseline Offset (clean air)	-2 to 4 ppm equivalent
Zero Shift* (-10°C to +50°C)	< +10 ppm equivalent
Repeatability	< ±5%
Linearity	Within ±5%

ELECTRICAL

Recommended Load Resistor	5 Ω
Bias Voltage	Not required

MECHANICAL

Housing Material	Noryl N110
Weight	5 g (nominal)
Orientation	Any

ENVIRONMENTAL

Operating Temperature Range*:	
Continuous	-10°C to +50°C
Intermittent	-20°C to +50°C
Operating Pressure Range	1 atm ± 10%
Operating Humidity Range*:	
Continuous	15% to 90% RH non-condensing
Intermittent	0% to 99% RH non-condensing

INTRINSIC SAFETY DATA*

Maximum at 1000ppm	0.1 mA
Maximum o/c Voltage	1.3 V
Maximum s/c Current	<1.0 A

LIFETIME

Long Term Output Drift	< 5% per annum
Recommended Storage Temp	+10°C to +30°C
Expected Operating Life*	> 6 years in normal use from date of manufacture
Storage Life	6 months in original packaging

Product Dimensions

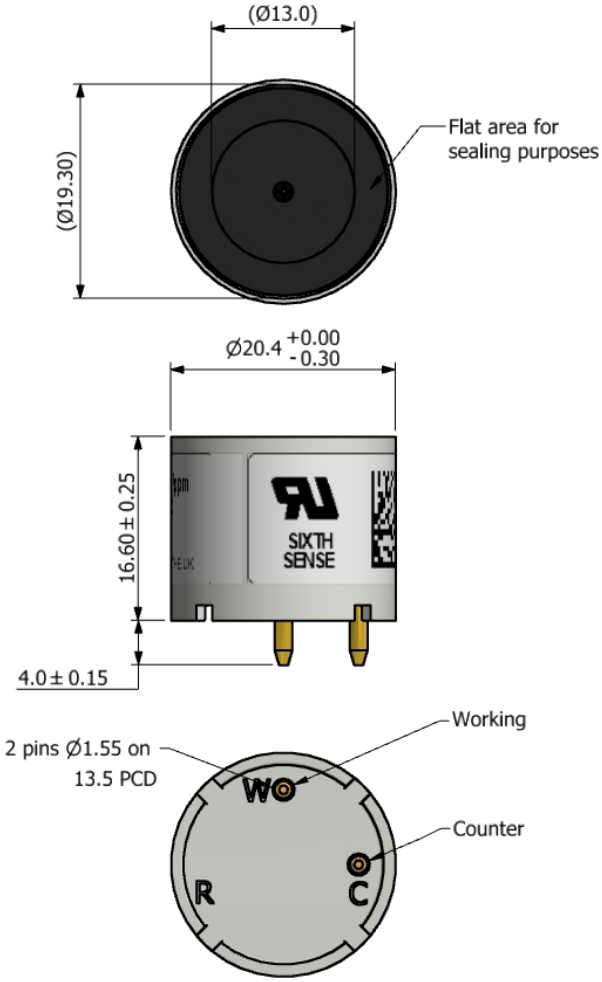

All dimensions in mm

All tolerances ±0.15 mm

unless otherwise stated

All measurements were taken at 20°C and 50% rH at 1 atm pressure unless otherwise indicated. Sensor performance may vary with environmental conditions

Performance characteristics outline the performance of sensors supplied within the first 3 months.

With the exception of items marked * the stated parameters have been verified under the UL component recognition programme.

Poisoning

CiTiceLs are designed for operation in a wide range of environments and harsh conditions. However, it is important that exposure to high concentrations of solvent vapours is avoided, both during storage, fitting into instruments, and operation.
When using sensors with printed circuit boards (PCBs), degreasing agents should be used before the sensor is fitted. Do not glue directly on or near the CiTiceL as the solvent may cause crazing of the plastic.

Cross Sensitivity Table

Whilst CiTiceLs are designed to be highly specific to the gas they are intended to measure, they will still respond to some degree to various other gases. The table below is not exclusive and other gases not included in the table may still cause a sensor to react.

IMPORTANT NOTE : The cross sensitivity data shown below does not form part of the product specification and is supplied for guidance only. Values quoted are based on tests conducted on a small number of sensors and any batch may show significant variation. For the most accurate measurements, an instrument should be calibrated using the gas under investigation.

Gas	Concentration Used (ppm)	Exposure Time (mins)	Reading (ppm CO)
Carbon Monoxide	100	5	100
Hydrogen Sulfide	25	5	0
Sulfur Dioxide	50	600	<0.5
Nitrogen Dioxide	50	900	-1
Nitric Oxide	50	5	8
Chlorine	2	5	0
Hydrogen	100	5	20
Carbon Dioxide	5000	5	0
Ammonia	100	5	0
Ethanol	2000	30	5
Iso-Propanol	200	120	0
Acetone	1000	5	0
Acetylene	40	5	80

WARNING: By the nature of the technology used, any electrochemical or catalytic bead sensor can potentially fail to meet specification without warning. Although City Technology makes every effort to ensure the reliability of our products of this type, where life safety is a performance requirement of the product, and where practical we recommend that all sensors and instruments using these sensors are checked for response to gas before use

Every effort has been made to ensure the accuracy of this document at the time of printing. In accordance with the company's policy of continued product improvement City Technology Limited reserves the right to make product changes without notice. No liability is accepted for any consequential losses, injury or damage resulting from the use of this document or from any omissions or errors herein. The data is given for guidance only. It does not constitute a specification or an offer for sale. The products are always subject to a programme of improvement and testing which may result in some changes in the characteristics quoted. As the products may be used by the client in circumstances beyond the knowledge and control of City Technology Limited, we cannot give any warranty as to the relevance of these particulars to an application. It is the clients' responsibility to carry out the necessary tests to determine the usefulness of the products and to ensure their safety of operation in a particular application.