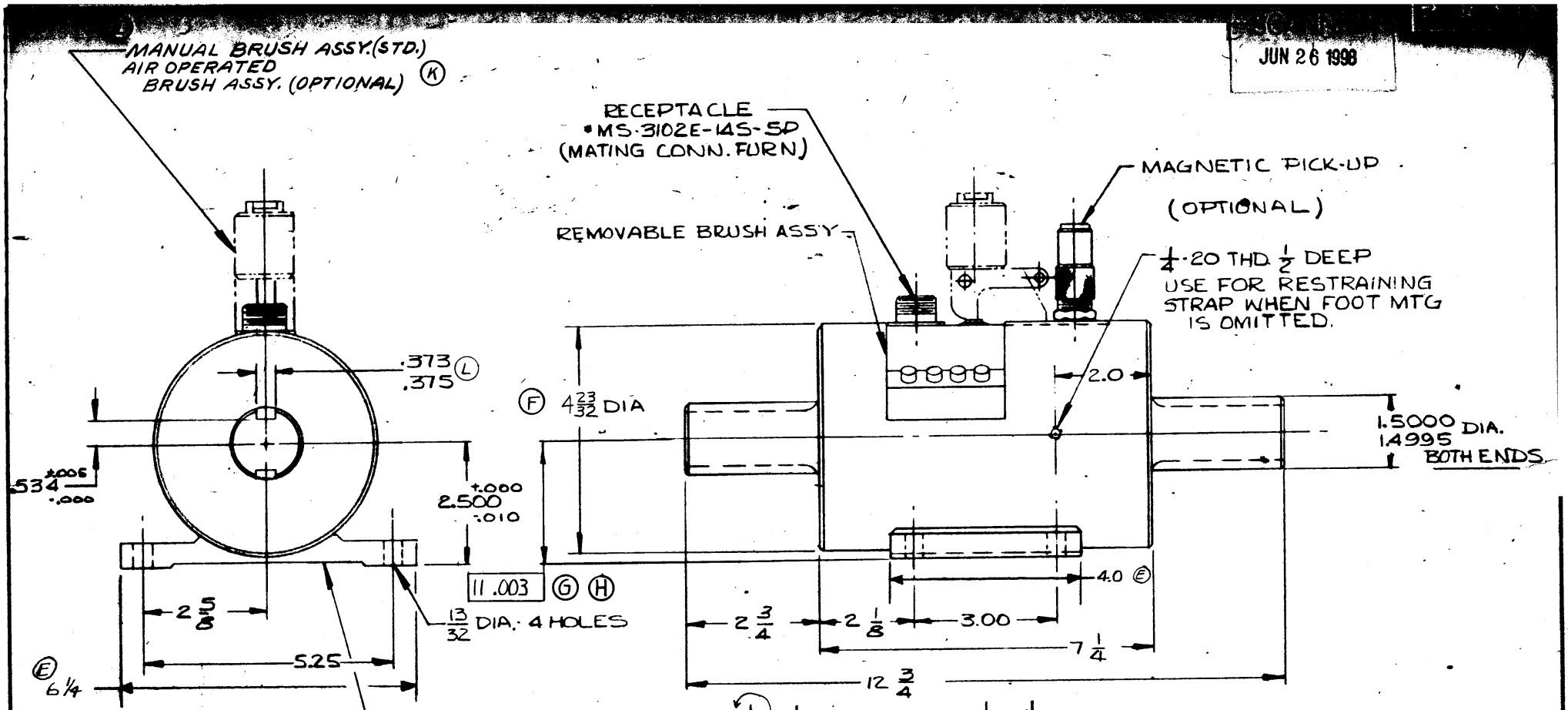

(J)
NOTE:
1. SEE DWG. B-1105 FOR SPECIFICATION INFO.

SYM.	REVISION	DATE
J	ADDED NOTE 1 cmr	8-2-83
I	ECN 2976 cmr	8-4-81
H	ECN 2702 CORRECTED	MH 9-14-78
G	ECN 2702 GH	5-18-78
F	WAS 4 3/4 ML.	8/26/77
E	ADDED DIM'S ML	8/26/77
D	ECN 2209	10-10-73
C	ADDED Output wc	3-4-70
B	ECN 1500	8-11-9
A	REDRAWN	6-13-68

DET. No	PART No	DESCRIPTION	REQ'D

O.D. DWG~IN-LINE OR FOOT MOUNTED TORQUE PICK-UP

SCALE: HALF	DRAWN BY: CURTIS	REF. DWG: C-12846	MAT'L: —
DATE: 6-13-68	CHK'D BY:	MODEL: 1105	JOB NO. —

UNLESS OTHERWISE SPECIFIED:
TOLERANCE ON FRACTIONS ± 1/64
TWO PLACE DECIMALS ± .010
THREE PLACE DECIMALS ± .005
ANGLES ± 0°30'
TOLERANCE ON DRILLED HOLES ± .007 / ± .005
REMOVE ALL BURRS & SHARP EDGES
DIMENSION LIMITS HELD AFTER PLATING
SURFACE FINISH 125√

LEBOW ASSOCIATES, INC.
OAK PARK, MICHIGAN

DRAWING NO. B-1105-DD

CAP-Y	R.P.M	MOD#	OUTPUT
10,000	8,500	1105-6K	2.0MV/V. NOM
5,000	8,500	1105-4K	2.0MV/V. NOM

L	.373/.375 WAS .3735/.3755 DCN 5207 cmr	7/18/
K	DELETED FIXED MODIFICATION OPT. ECN 3496 cmr	

R,S,P,A

JUN 26 1998