"NOTICE TO PERSONS RECEIVING THIS DRAWING AND/OR TECHNICAL INFORMATION"

Eaton Corporation claims proprietary rights to the material disclosed hereon. This drawing and/or technical information is issued in confidence for engineering information only and may not be reproduced or used to manufacture anything shown or referred to hereon, without direct written permission from Eaton Corporation to the user. This drawing and/or technical information is the property of Eaton Corporation and is loaned for mutual assistance, to be returned when its purpose has been served.

C-1805-D REV.

THIRD ANGLE PROJECTION

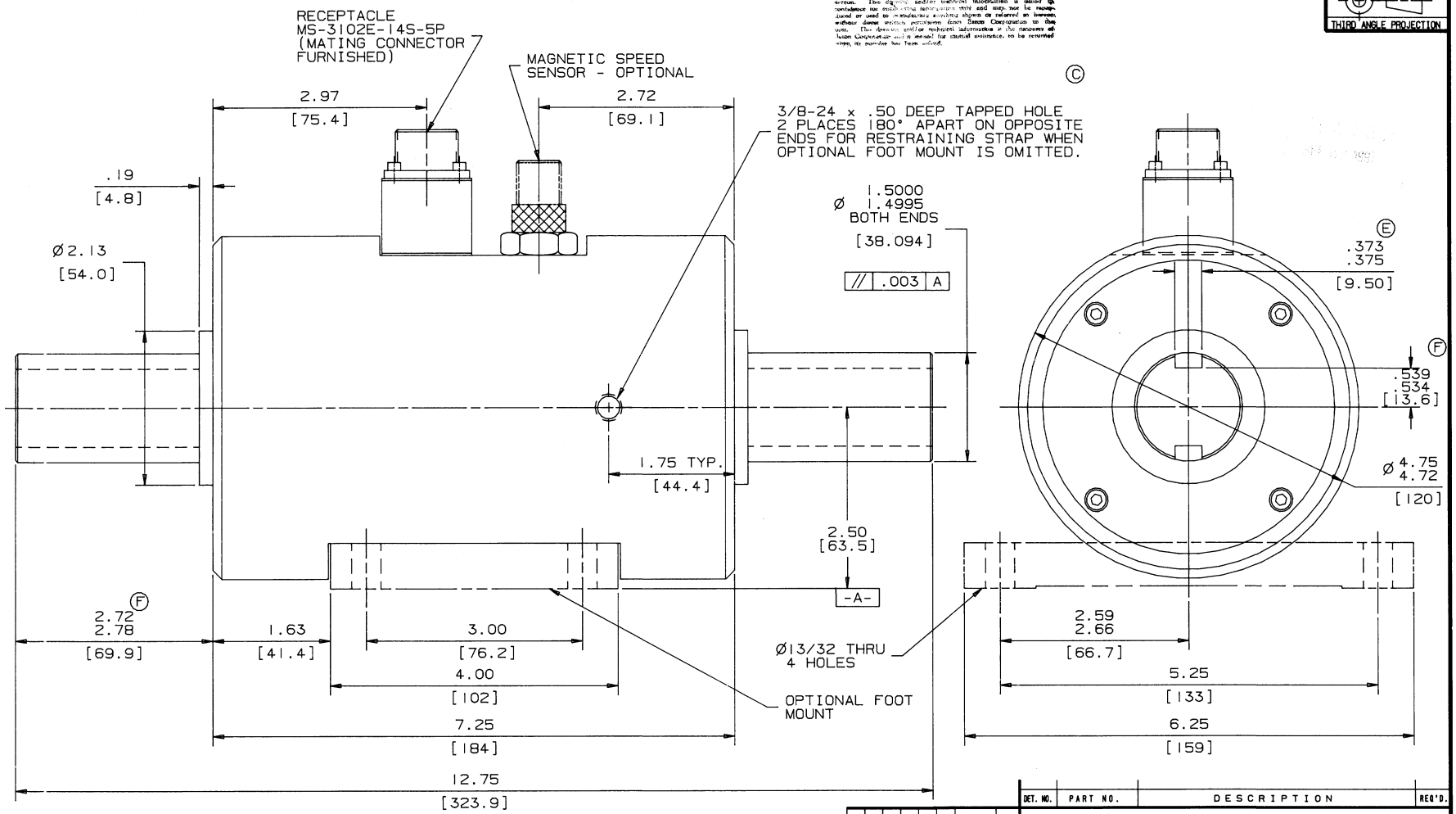

CACPAITY----------2K,5K,10K IN-LBS
OVERLOAD CAPACITY---300% AT 2K& 5K IN-LBS & 200% AT 10K IN-LBS
OUTPUT----------2.0 mV/VOLT NOMINAL
SPEED----------22,000 R.P.M. KLUBER GREASE PACK BEARINGS (B)
FOR ADDITIONAL SPECIFICATIONS SEE EATON/LEBOW SPEC. SHEET S-1800

NOTES
1 ALL DIMENSIONS IN BRACKETS ARE IN MILLIMETERS AND ARE PURELY MATHEMATICAL CALCULATIONS FROM STANDARD ENGLISH DIMENSIONS. (A)
2 DYNAMICALLY BALANCE WITHIN .02 IN. OZ. UPON REQUEST ONLY.

REVISIONS							
SYM.	CHG'D.	APPV'D.	DATE	DESCRIPTION			
A	JR		4-11-85	REVISED DWG			
B	JR		1-25-85	CORRECTED SPEC. No.			
C	JR		1-4-85	WAS STANDARD			
D	JR		12-28-84	WAS MODEL 1805-P01			
E	JR		7-18-30	.373/.375 WAS .3735/.3755			
F	JR		6-6-30	.539 WAS .537, 69.9 WAS 71.			

ECN NO.: DCN 4086, DCN 5207, 40404

DET. NO.	PART NO.	DESCRIPTION	REQ'D.

EATON
Lebow Products

Eaton Corporation
Physical Measurement
Products
Troy, Michigan

UNLESS OTHERWISE SPECIFIED
LINEAR DIMENSIONS ARE IN INCHES
ANGULAR DIMENSIONS ARE IN DEGREES
DIMENSION LIMITS HELD AFTER PLATING
REMOVE ALL BURRS & SHARP EDGES
SURFACE FINISH 125√

TOLERANCES

DRILLED HOLES	TWO PLACE DECIMALS	THREE PLACE DECIMALS	ANGLES
-.000 +.007	± .010	± .005	± 0° 30'

DR. BY:	CHK'D. BY:	ENGR.
JR	S.M.	P.M.
DATE 1-30-85	DATE 6-7-85	DATE 6-7-85

SCALE:	REF. DWG.	JOB NO.	MAT'L.	MODEL:
1 : 1	D-31216	R11-0021		1805

TITLE: OUTER DIMENSION ROTARY TRANSFORMER TORQUE SENSOR

DRAWING NO.: C-1805-D REV.